KT-J019-ARC200D+

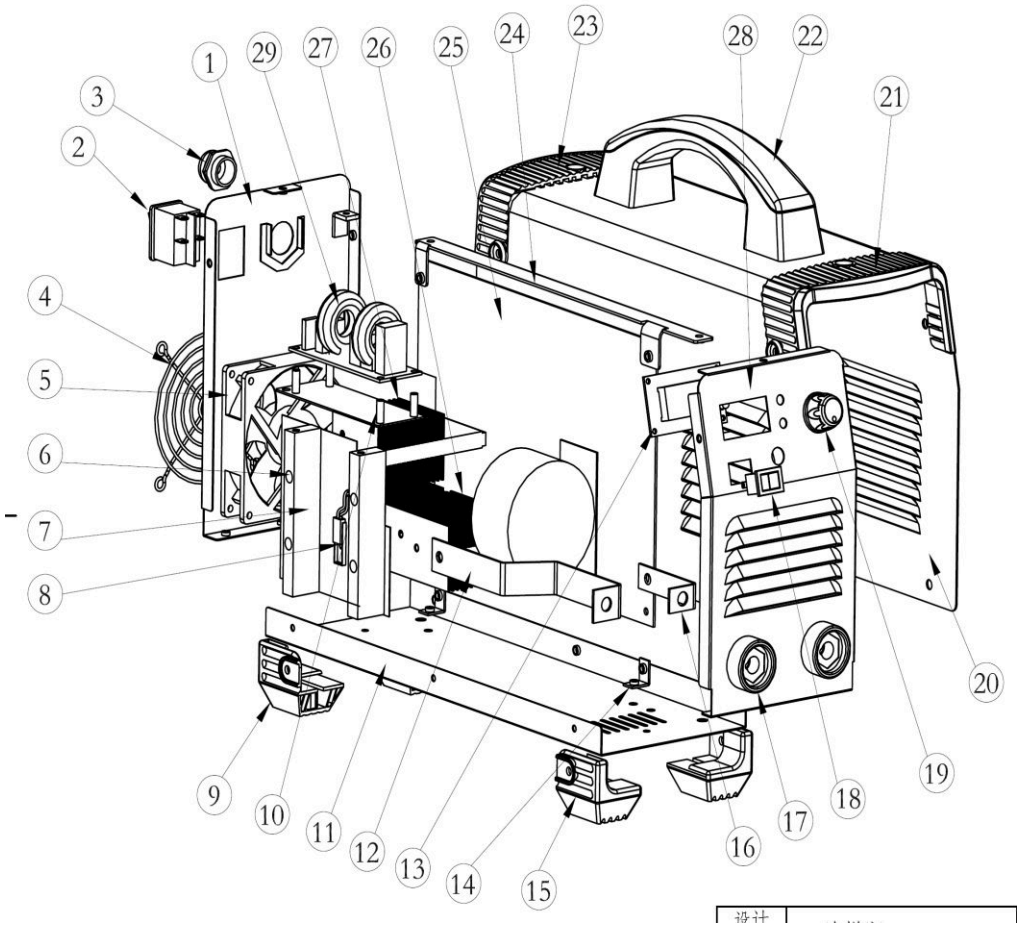

No.	Part no.	Part name	Qty.
1	10067084	rear panel	1
2	10056467	rocker switch	1
3	10004886	cable clip	1
4	10007333	fan guard	1
5	10044817	fan	1
6	10067027	windshield	1
7	10050413	long column	2
8	10050392	thermoswitch	1
9	10046932	plastic feet	2
10	/		0
11	10067023	machine base	1
12	10067022	connection	1
13	10046712	display meter	1
14	10037028	angel support	2
15	10046933	plastic feet	2
16	10057595	connection	1
17	10045432	quick socket	2
18	10062441	main switch	1
19	10066872	knob	1
20	10057982	shell	1
21	10047106	front plastic part	1
22	10046896	hadle	1
23	10047109	rear plastic part	1
24		/	0
25	10066805	main board	1
26	10054622	heat sink	2
27	10059772	heat sink	4
28	10059610	front panel	1
29	/	EMC board	0