Tensioner TM Series

Order Product Code

TMB60

Tensioner No.

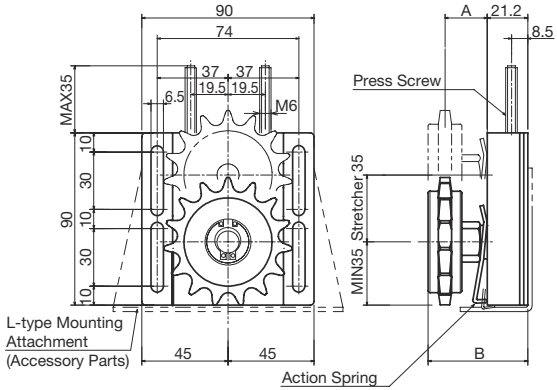

TMB

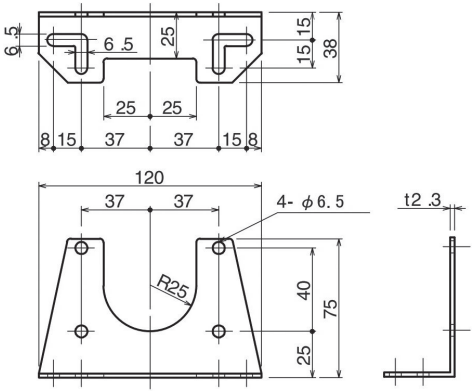

Chain stretch causes transmission efficiency to drop. It also accelerates chain and sprocket wear and shortens service life.
The KANA Tensioner automatic tension type is provided with a standard idler and is operated by a built-in spring.

◇ Tensioner TMB Type (w/ Standard Idler Sprocket)

Tensioner No.	Applicable Roller Chains	A	B	Weight (g)
TMB-35	JIS35	22	52	740
TMB-40	JIS40	22	52	780
TMB-50	JIS50	22	52	820
TMB-60	JIS60	22	52	872
TMB-80	JIS80	22	52	962