Compact cylinders ISO 21287 Series 32

New models

Single and double-acting, non-rotating
ø 12, 16, 20, 25, 32, 40, 50, 63, 80, 100, 125 mm

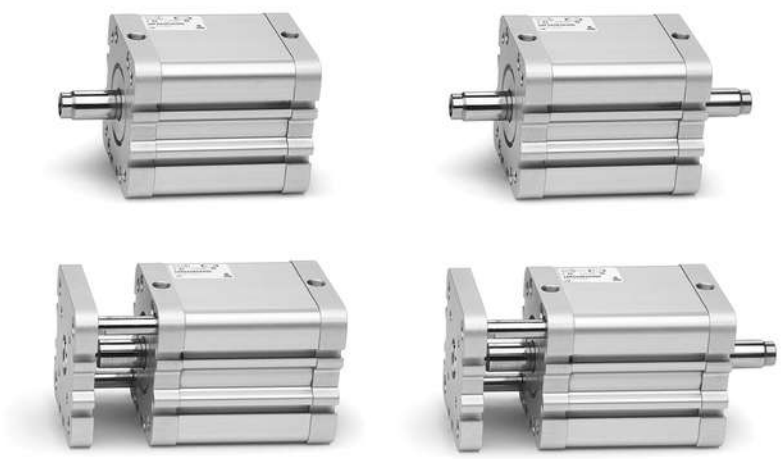

- In compliance with ISO 21287
- Compact design
- Wide range of models available in different diameters

Series 32 cylinders, thanks to their compactness, are suitable for installation in confined spaces. Being in compliance with the ISO 21287 Standard, the cylinders Series 32 can be used in conjunction with mountings/accessories suitable with ISO 15552 standard.

GENERAL DATA

Construction	compact profile
Operation	single and double acting, magnetic
Design	ISO 21287
Materials	anodized AL body and end-blocks - rolled stainless steel AISI 303 rod AL piston - rod seal, end-block and piston seal in PU high temperatures: rod seal, or end-block and piston in FKM (140°)
Mounting	with threaded holes on the end blocks flange - feet - trunnion
Stroke min and max (1)	Ø12-16 = 5-200 mm Ø20-25 = 5-300 mm Ø32-40-50-63 = 5-400 mm Ø80-100-125 = 5-500 mm
Operating temperature	0°C ÷ 80°C (with dry air -20°C)
Operating pressure	1 ÷ 10 bar (double-acting) 2 ÷ 10 bar (single-acting)
Fluid	clean air without lubrication. If lubricated air is used it is recommended to use oil ISOVG32. Once applied the lubrication should never be interrupted.
Operation speed	10 ÷ 700mm/sec. (without load)

(*) the minimum stroke for the use of the sensors is 10 mm.

Products designed for industrial applications.
General terms and conditions for sale are available on www.camozzi.com.

STANDARD STROKES FOR CYLINDERS SERIES 32

✖ = Non-rotating ● = Double-acting, male/female rod thread;
■ = Single-acting, front/rear spring, male/female rod thread.

STANDARD STROKES											
Ø	5	10	15	20	25	50	100	200	300	400	500
12	● ■	● ■	●	●	●	●	●	●			
16	● ■	● ■	● ■	● ■	● ■	●	●	●			
20	× ● ■	× ● ■	× ● ■	× ● ■	× ● ■	× ●	× ●	× ●	× ●		
25	× ● ■	× ● ■	× ● ■	× ● ■	× ● ■	× ●	× ●	× ●	× ●		
32	× ● ■	× ● ■	× ● ■	× ● ■	× ● ■	× ●	× ●	× ●	× ●	× ●	
40	× ● ■	× ● ■	× ● ■	× ● ■	× ● ■	× ●	× ●	× ●	× ●	× ●	
50	× ● ■	× ● ■	× ● ■	× ● ■	× ● ■	× ●	× ●	× ●	× ●	× ●	
63	× ● ■	× ● ■	× ● ■	× ● ■	× ● ■	× ●	× ●	× ●	× ●	× ●	
80	× ● ■	× ● ■	× ● ■	× ● ■	× ● ■	× ●	× ●	× ●	× ●	× ●	●
100	× ● ■	× ● ■	× ● ■	× ● ■	× ● ■	× ●	× ●	× ●	× ●	× ●	●
125	● ■	● ■	● ■	● ■	● ■	●	●	●	●	●	●

CODING EXAMPLE

32	M	2	A	032	A	050	

32	SERIES		
M	VERSION M = male rod thread, mounted with rod nut Mod. U F = female rod thread R = antirotation with flange (from Ø20 to Ø100; no single-acting)		
2	OPERATION 1 = single-acting, front spring 2 = double-acting 3 = double-acting, through-rod 4 = single-acting, rear spring		PNEUMATIC SYMBOLS CS06 CD08 CD12 CS08
A	MATERIALS A = anodized aluminium body, end blocks and piston, PU seals (rod, end-blocks OR and piston)		
032	BORES 012 = 12 mm 025 = 25 mm 050 = 50 mm 100 = 100 mm	016 = 16 mm 032 = 32 mm 063 = 63 mm 125 = 125 mm	020 = 20 mm 040 = 40 mm 080 = 80 mm
A	CONSTRUCTION A = standard		
050	STROKE (see the table)		
	VARIANTS = standard V = FKM rod seal W = high temperatures (up to 140°C) non-magnetic (_ _ _) = stem longer than _ _ _mm		

PNEUMATIC SYMBOLS

The pneumatic symbols which have been indicated in the CODING EXAMPLE are shown below.

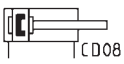

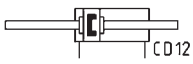

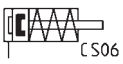



ACCESSORIES FOR CYLINDERS SERIES 32



Rod fork end Mod. G



Swivel ball joint Mod. GA



Piston rod socket joint Mod. GY



Self aligning rod Mod. GK



Coupling piece Mod. GKF



Piston rod lock nut Mod. U



Front and rear flange Mod. D-E



Front/rear spot faced trunnion Mod. FN



Foot mount Mod. B



Opposed cylinder coupler Mod. DC-32



Front female trunnion Mod. H and C-H



Rear female trunnion Mod. C and C-H



Rear trunnion male Mod. L



Rear trunnion ball-joint Mod. R



90° male trunnion Mod. ZC



Swivel combination Mod. C+L+S



90° swivel combination for trunnion Mod. I



Clevis pin Mod. S



Proximity switches Mod. CSG



Proximity switches Mod. CST



Proximity switches Mod. CSH

All accessories are supplied separately.

Products designed for industrial applications.
General terms and conditions for sale are available on www.camozzi.com.

APPLICABLE LOADS

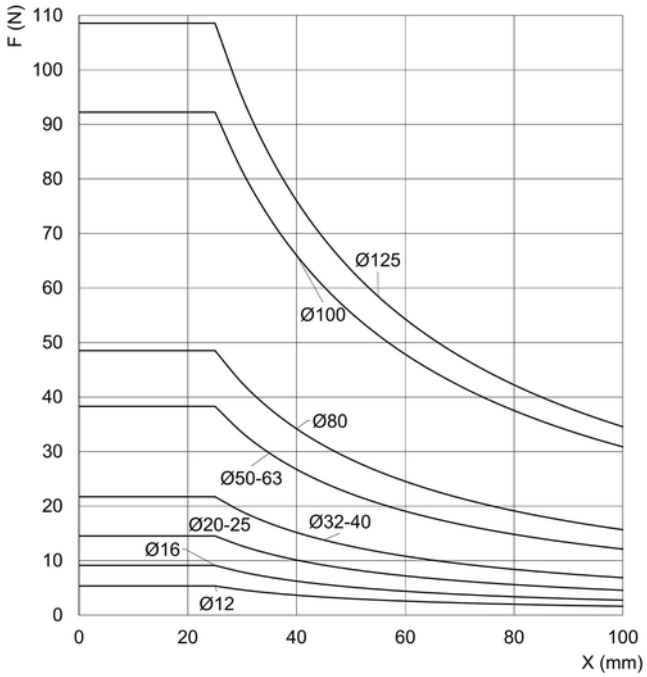

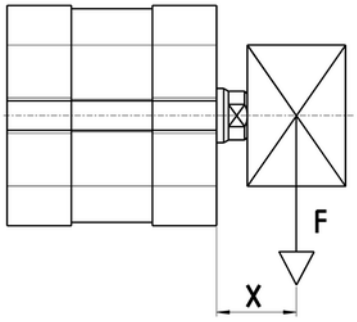

Version M,F
Operating 1,2,4
(See coding example)

F = Transversal load
X = Dependant on stroke

APPLICABLE LOADS

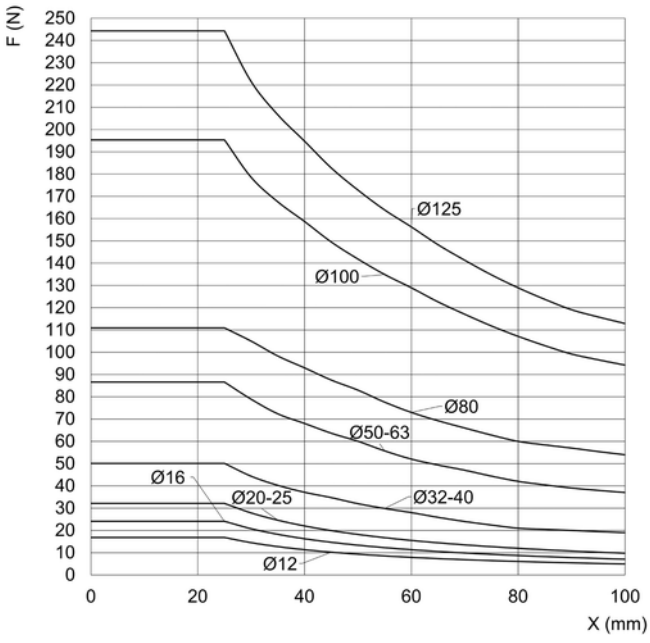

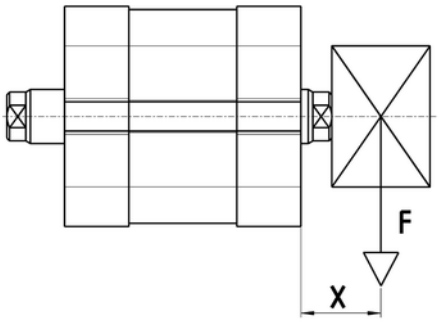

Version M,F
Operating 3
(See coding example)

F = Transversal load
X = Dependant on stroke

APPLICABLE LOADS

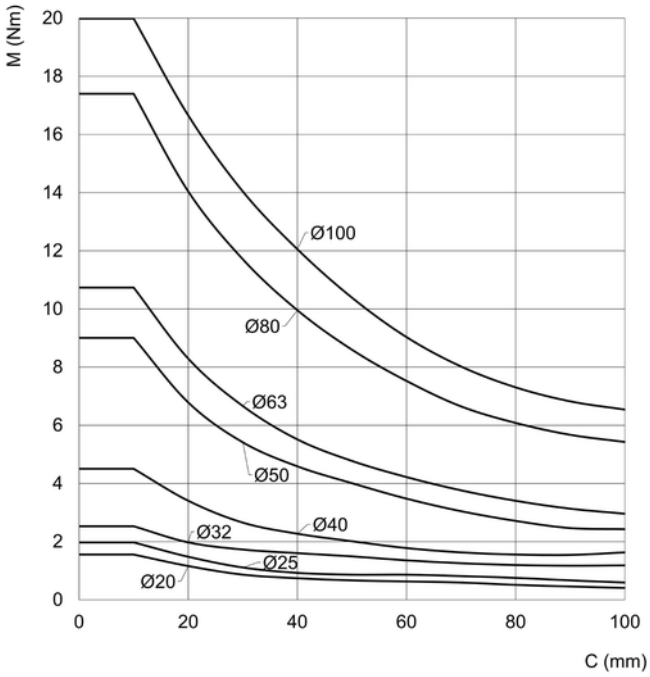

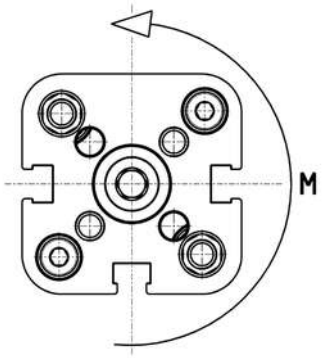

Version R
Operating 2
(See coding example)

M = Torque moment
C = Dependant on stroke.

APPLICABLE LOADS

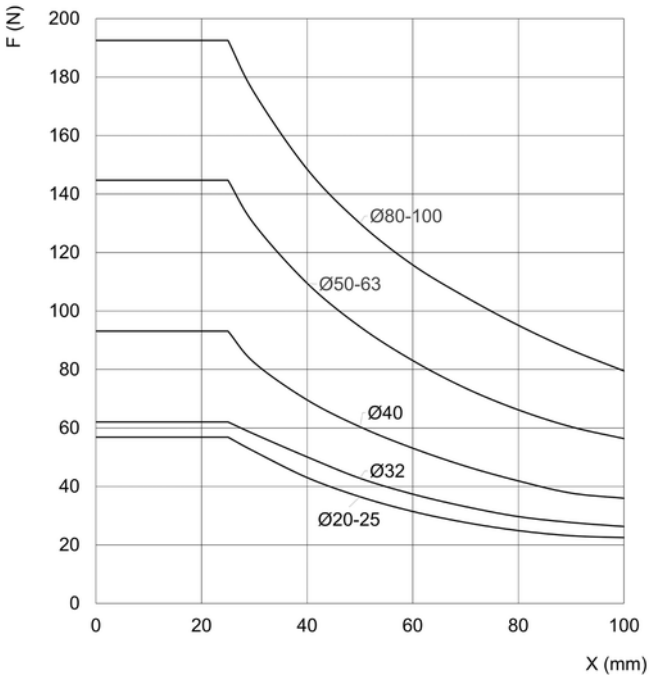

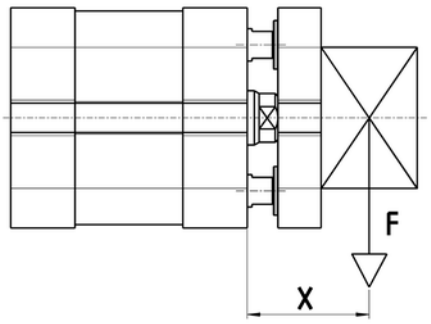

Version R
Operating 2
(See coding example)

F = Transversal load
X = Dependant on stroke.

Products designed for industrial applications.
General terms and conditions for sale are available on www.camozzi.com.

APPLICABLE LOADS

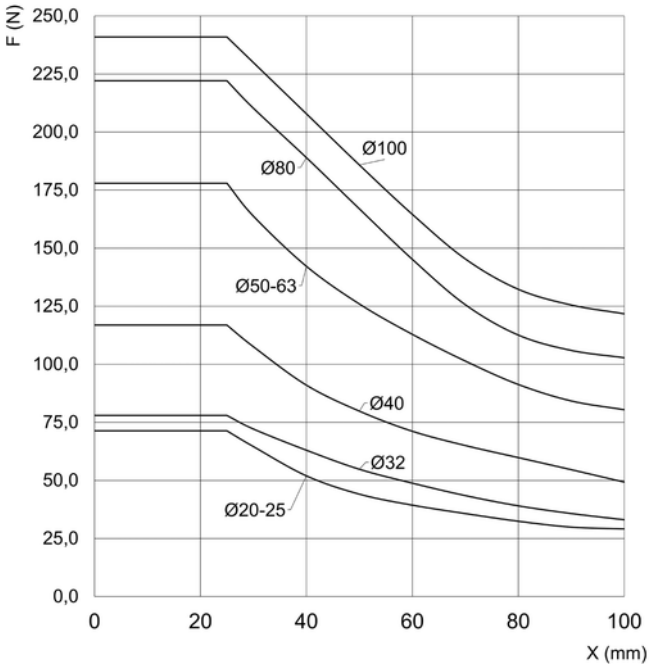

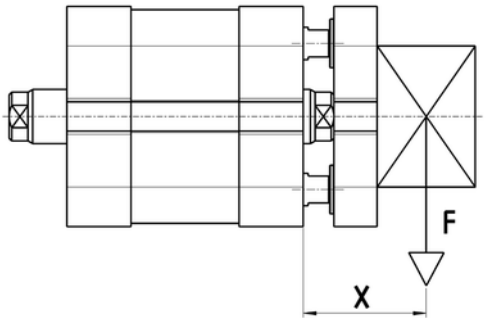

Version R
Operating 3
(See coding example)

F = Transversal load
X = Dependant on stroke.

Spring force single-acting cylinders

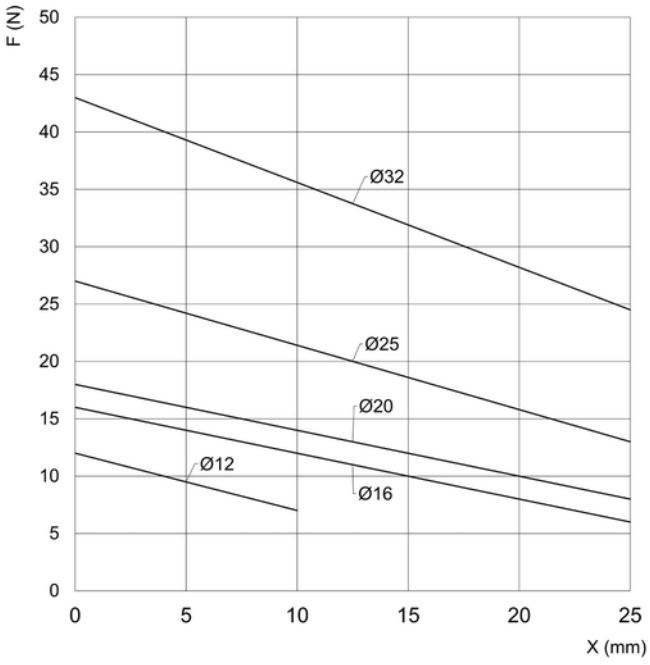

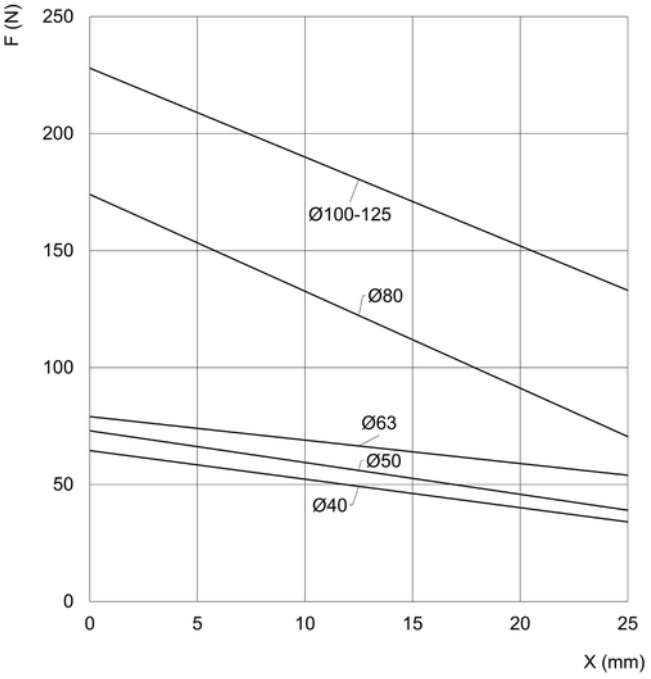

F = Force of spring
X = Stroke function

MOUNTING EXAMPLE

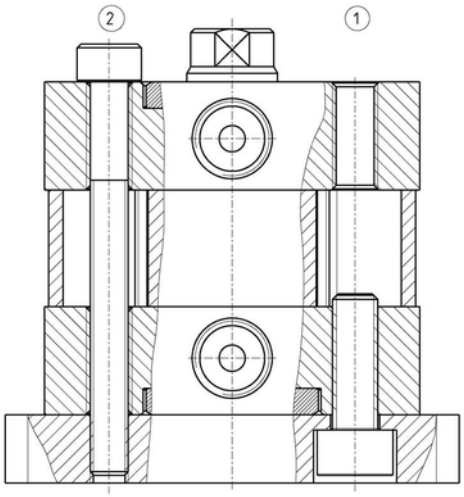

Mounting example for mounting cylinders Ø 32; 40; 50; 63; 80; 100; 125.
1 = Rear mounting
2 = Through mounting

N.B. For through mounting with screws through the cylinder it is recommended to use screws made from non-magnetic material.
Cylinder Ø 125 has rear mounting (1) only.

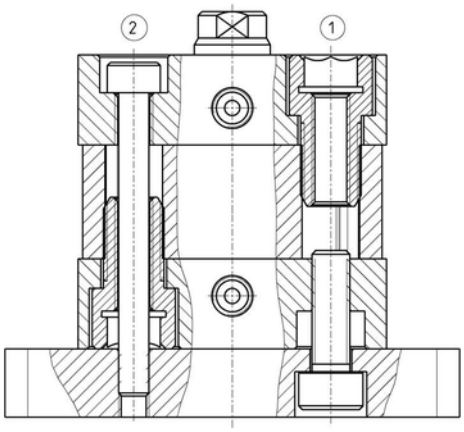

Mounting example for mounting cylinders Ø 12 - 16 -20 - 25.
1 = Rear mounting
2 = Through mounting

N.B. For through mounting with screws through the cylinder it is recommended to use screws made from non-magnetic material.

Products designed for industrial applications.
General terms and conditions for sale are available on www.camozzi.com.

CAMOZZI Automation

Compact magnetic cylinders Mod. 32F and 32M



+ = add the stroke
1 = groove for sensor

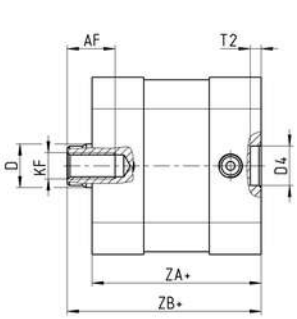

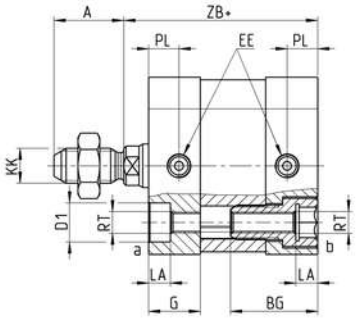

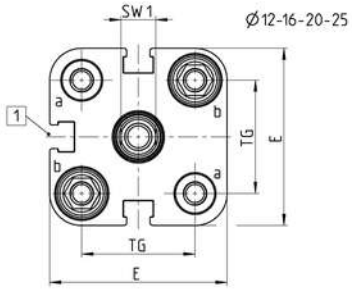

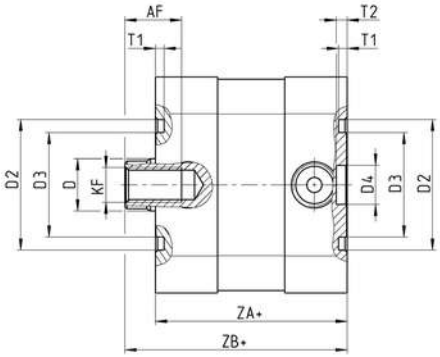

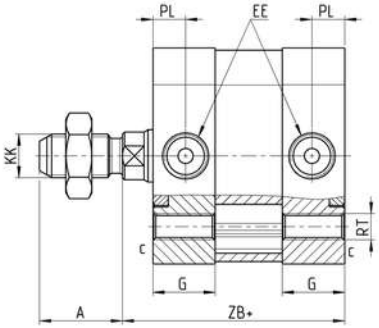

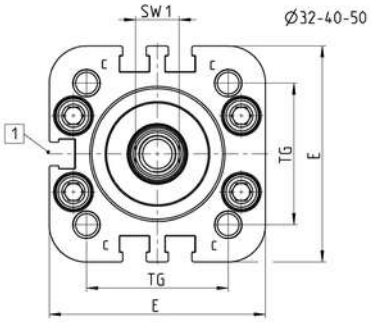

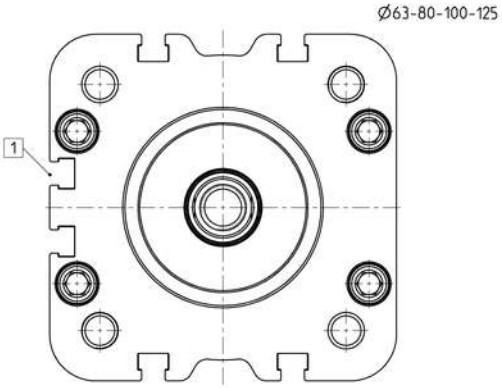

Ø	A	AF	BG	G	øD	øD1	øD2	øD3	øD4	E	EE	KF	KK	LA	PL	RT	SW1	T1	T2	TG	ZA+	ZB+
12	10	8	18	10,5	6	6	-	-	9	27,5	M5	M3	M5	3,5	6	M4	5	-	2,1	16	35	39,2
16	12	10	18,5	10,5	8	6	-	-	9	29	M5	M4	M6	3,5	6	M4	7	-	2,1	18	35	39,7
20	16	11	20	10,9	10	9	-	-	9	35,8	M5	M6	M8	5	6,5	M5	8	-	2,5	22	36,8	42,5
25	16	11	20	11,9	10	9	-	-	9	40,7	M5	M6	M8	5	7	M5	8	-	2,5	26	38,8	44,5
32	19	13	-	14,3	12	-	30	24	9	49,6	G1/8	M8	M10x1,25	-	7,6	M6	10	2	2,5	32,5	44	51
40	19	13	-	14,3	12	-	35	29	9	57	G1/8	M8	M10x1,25	-	7,6	M6	10	2	2,5	38	45	52
50	22	16	-	14,3	16	-	40	34	12	69,6	G1/8	M10	M12x1,25	-	7,6	M8	13	2	3	46,5	45	53
63	22	16	-	14	16	-	45	39	12	79,6	G1/8	M10	M12x1,25	-	7,6	M8	13	2	3	56,5	49	57
80	28	20	-	14,8	20	-	45	39	12	95,6	G1/8	M12	M16x1,5	-	7,7	M10	17	2	3	72	54	63,5
100	28	20	-	17,8	25	-	55	49	12	115,6	G1/8	M12	M16x1,5	-	8	M10	22	2	3	89	66,8	76,5
125	40	25	20	20	25	-	-	-	12	134,6	G1/4	M16	M20x1,5	8	10,5	M12	22	-	2,5	110	81	92

Compact magnetic cylinders Mod. 32F3 and 32M3



+ = add the stroke once
++ = add the stroke twice
1 = groove for sensor

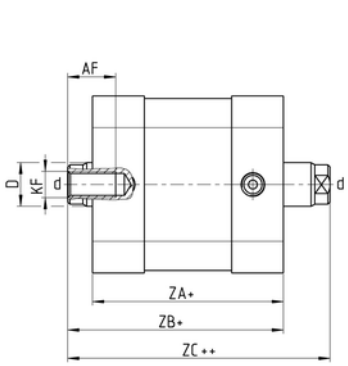

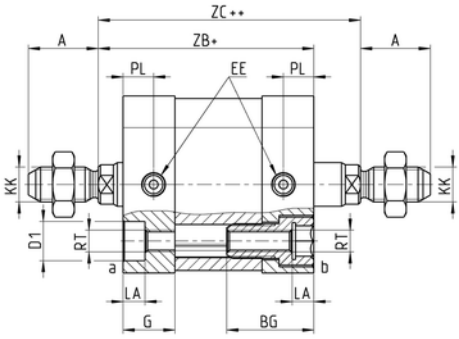

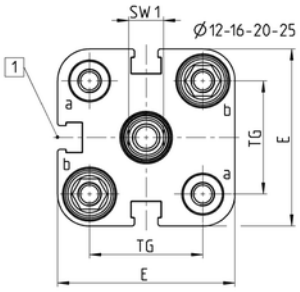

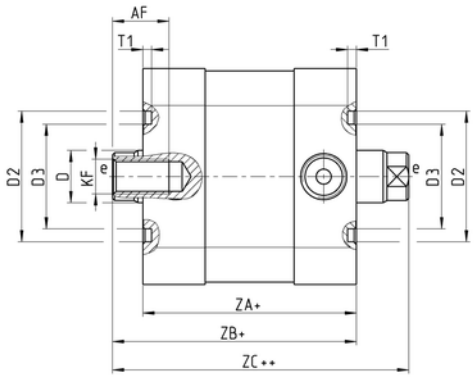

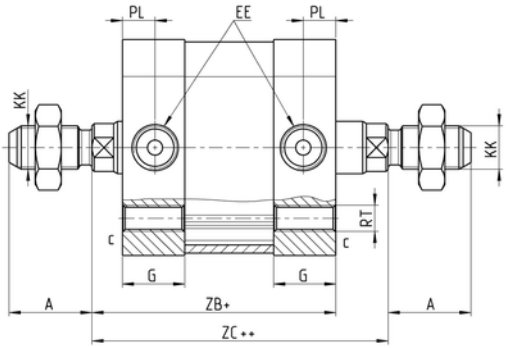

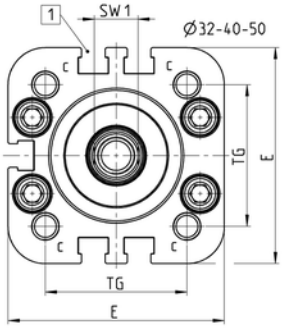

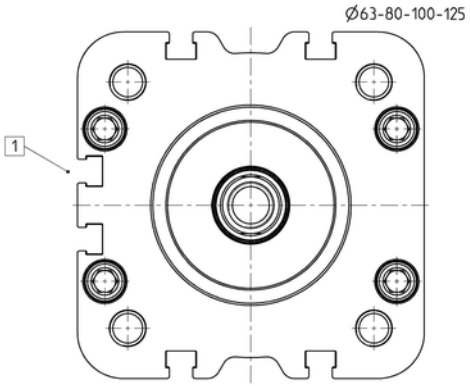

Ø	A	AF	BG	G	øD	øD1	øD2	øD3	E	EE	KF	KK	LA	PL	RT	SW1	T1	TG	ZA+	ZB+	ZC+
12	10	8	18	10,5	6	6	-	-	27,5	M5	M3	M5	3,5	6	M4	5	-	16	35	39,2	43,4
16	12	10	18,5	10,5	8	6	-	-	29	M5	M4	M6	3,5	6	M4	7	-	18	35	39,7	44,4
20	16	11	20	10,9	10	9	-	-	35,8	M5	M6	M8	5	6,5	M5	8	-	22	36,8	42,5	48,2
25	16	11	20	11,9	10	9	-	-	40,7	M5	M6	M8	5	7	M5	8	-	26	38,8	44,5	50,2
32	19	13	-	14,3	12	-	30	24	49,6	G1/8	M8	M10x1,25	-	7,6	M6	10	2	32,5	44	51	58
40	19	13	-	14,3	12	-	35	29	57	G1/8	M8	M10x1,25	-	7,6	M6	10	2	38	45	52	59
50	22	16	-	14,3	16	-	40	34	69,6	G1/8	M10	M12x1,25	-	7,6	M8	13	2	46,5	45	53	61
63	22	16	-	14	16	-	45	39	79,6	G1/8	M10	M12x1,25	-	7,6	M8	13	2	56,5	49	57	65
80	28	20	-	14,8	20	-	45	39	95,6	G1/8	M12	M16x1,5	-	7,7	M10	17	2	72	54	63,5	73
100	28	20	-	17,8	25	-	55	49	115,6	G1/8	M12	M16x1,5	-	8	M10	22	2	89	66,8	76,5	86,2
125	40	25	20	20	25	-	-	-	134,6	G1/4	M16	M20x1,5	8	10,5	M12	22	-	110	81	92	103

Products designed for industrial applications.
General terms and conditions for sale are available on www.camozzi.com.

Compact magnetic cylinders Mod. 32R



+ = add the stroke once
++ = add the stroke twice
1 = groove for sensor

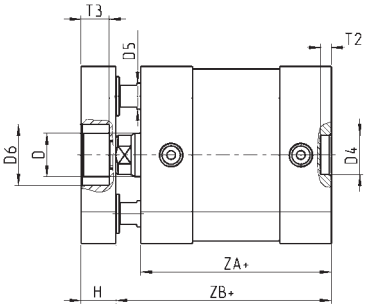

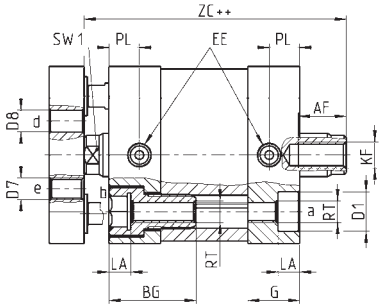

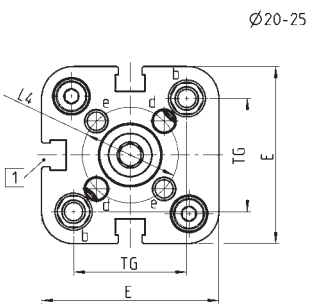

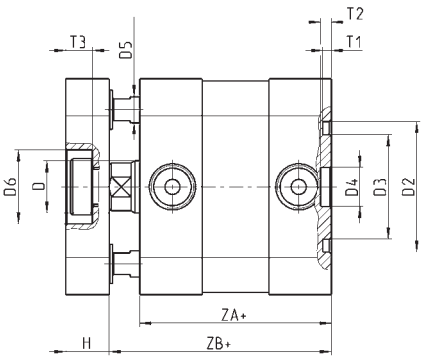

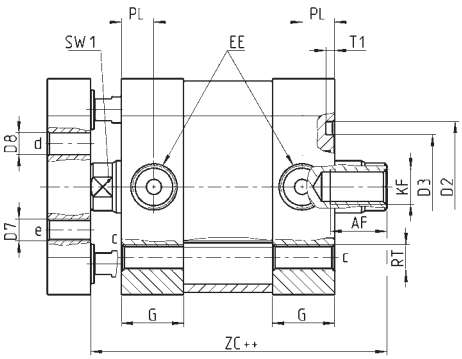

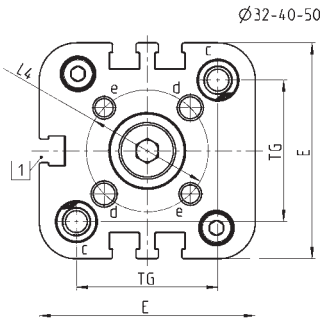

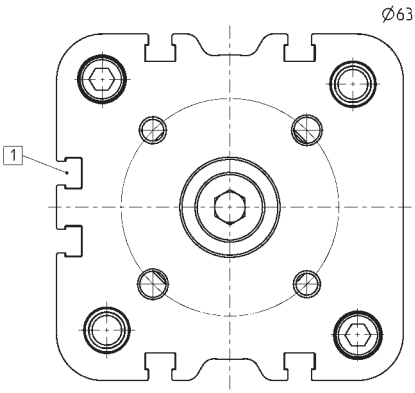

DIMENSIONS																										
Ø	AF	BG	G	øD	øD1	øD2	øD3	øD4	øD5	øD6	D7	øD8	E	EE	H	KF	LA	øL4	PL	RT	SW1	T1	T2	T3	TG	ZA+	ZB+	ZC+
20	11	20	10,9	10	9	-	-	9	6	-	M4	4	35,8	M5	8	M6	5	17	6,5	M5	8	-	2,5	-	22	36,8	42,5	48,2
25	11	20	11,9	10	9	-	-	9	6	14	M5	5	40,7	M5	8	M6	5	22	7	M5	8	-	2,5	6,5	26	38,8	44,5	50,2
32	13	-	14,3	12	-	30	24	9	6	17	M5	5	49,6	G1/8	10	M8	-	28	7,6	M6	10	2	2,5	6	32,5	44	51	58
40	13	-	14,3	12	-	35	29	9	6	17	M5	5	57	G1/8	10	M8	-	33	7,6	M6	10	2	2,5	6	38	45	52	59
50	16	-	14,3	16	-	40	34	12	10	22	M6	6	69,6	G1/8	12	M10	-	42	7,6	M8	13	2	3	7	46,5	45	53	61
63	16	-	14	16	-	45	39	12	10	22	M6	6	79,6	G1/8	12	M10	-	50	7,6	M8	13	2	3	7	56,5	49	57	65
80	20	-	14,8	20	-	45	39	12	12	24	M8	8	95,6	G1/8	14	M12	-	65	7,7	M10	17	2	3	10,5	72	54	63,5	73
100	20	-	18	25	-	55	49	12	12	24	M10	10	115,6	G1/8	14	M12	-	80	8	M10	22	2	3	10,5	89	67	76,7	86,2

Foot mount Mod. B

Material: zinc-plated steel.



Supplied with:
2x feet
4x screws

+ = add the stroke

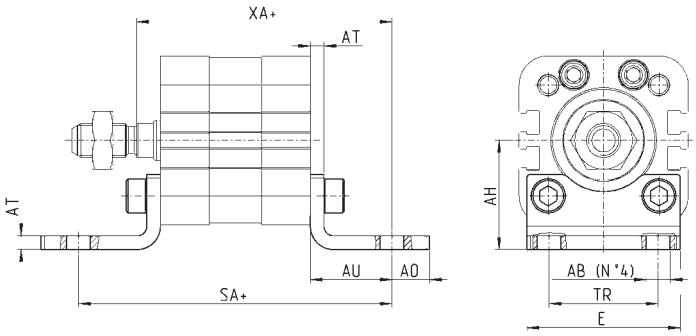

DIMENSIONS										
Mod.	Ø	ø AB	AH	AO	AU	AT	E	TR	SA+	XA+
B-32-12	12	5,5	21	5	13	3	26	16	61	52,2
B-31-12-16	16	5,5	22	7	13	3	28	18	61	52,7
B-32-20	20	6,5	27	9	16	4	35	22	68,8	58,5
B-31-25	25	6,5	29	9	16	4	39	26	70,8	60,5
B-41-32	32	7	32	11	24	4	45	32	92	75
B-41-40	40	10	36	15	28	4	53,5	36	101	80
B-41-50	50	10	45	15	32	4	62,5	45	109	85
B-41-63	63	10	50	15	32	5	73	50	113	89
B-41-80	80	12	63	20	41	6	92	63	136	104,5
B-41-100	100	14,5	71	25	41	6	108,5	71	148,8	117,5
B-32-125	125	16,5	90	25	45	7	132	90	171	137

Rear female trunnion Mod. C and C-H

Material: Aluminium.



Supplied with:
1x female trunnion
4x screws

+ = add the stroke

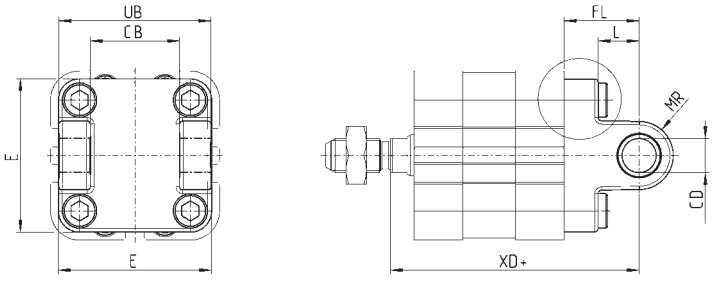

Ø 32



DIMENSIONS									
Mod.	Ø	ø CD	E	CB	UB	L	FL	MR	XD+
C-41-32	32	10	47	26	46,5	12,5	22	10	73
C-41-40	40	12	52	28	52	16	25	12	77
C-41-50	50	12	64	32	60	16	27	12	80
C-H-41-63	63	16	74	40	70	21	32	16	89
C-H-41-80	80	16	94	50	90	22	36	16	99,5
C-H-41-100	100	20	114	60	110	27	41	20	117,5
C-H-32-125	125	25	140	70	130	30	50	25	142

Products designed for industrial applications.
General terms and conditions for sale are available on www.camozzi.com.

Front female trunnion Mod. H and C-H



Material: Aluminium.

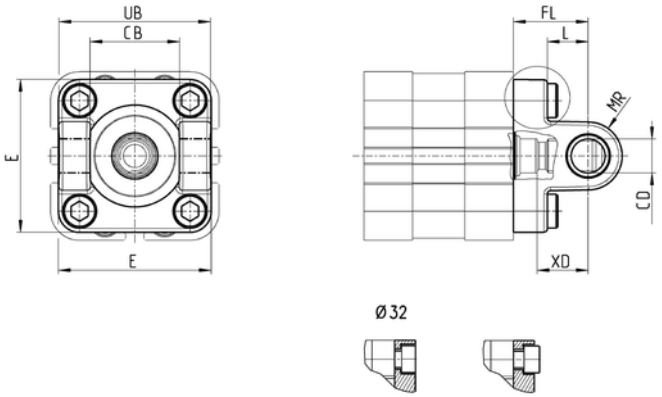

Supplied with:
1x female trunnion
4x screws

DIMENSIONS									
Mod.	Ø	ø CD	E	CB	UB	L	FL	MR	XD
H-41-32	32	10	47	26	46,5	12,5	22	10	15
H-41-40	40	12	52	28	52	16	25	12	18
H-41-50	50	12	64	32	60	16	27	12	19
H-60-63	63	16	74	40	70	21	32	16	24
C-H-41-80	80	16	94	50	90	22	36	16	26,5
C-H-41-100	100	20	114	60	110	27	41	20	31,3
C-H-32-125	125	25	140	70	130	30	50	25	41

Front and rear flange Mod. D-E



Material: zinc-plated steel for Ø 12 - Ø 25; Aluminium for Ø 32 ÷ Ø 125.

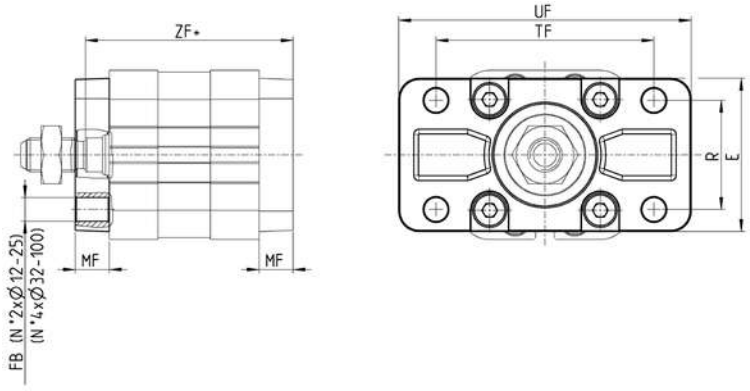

Supplied with:
1x flange
4x screws

+ = add the stroke

DIMENSIONS								
Mod.	Ø	ø FB	E	MF	R	TF	UF	ZF+
D-E-31-12-16	16	5,5	29	10	-	43	55	49,7
D-E-32-20	20	6,6	36	10	-	55	70	52,5
D-E-32-25	25	6,6	40	10	-	60	76	54,5
D-E-41-32	32	7	45	10	32	64	80	61
D-E-41-40	40	9	52	10	36	72	90	62
D-E-41-50	50	9	65	12	45	90	110	65
D-E-41-63	63	9	75	12	50	100	120	69
D-E-41-80	80	12	95	16	63	126	150	79,5
D-E-41-100	100	14	115	16	75	150	170	92,5
D-E-32-125	125	16	140	20	90	180	220	112

Products designed for industrial applications.
General terms and conditions for sale are available on www.camozzi.com.

Rear trunnion male Mod. L



Material: Aluminium.

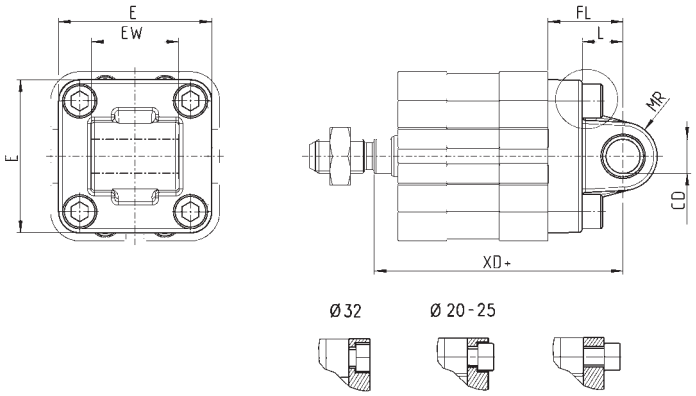

Supplied with:
1x male trunnion
4x screws

+ = add the stroke

DIMENSIONS								
Mod.	Ø	ø CD	E	EW	L	FL	MR	XD+
L-31-12-16	16	6	30	12	10	16	6	55,7
L-32-20	20	8	34	16	14	20	8	62,5
L-32-25	25	8	38	16	14	20	8	64,5
L-41-32	32	10	47	26	12.5	22	10	73
L-41-40	40	12	52	28	16	25	12	77
L-41-50	50	16	64	32	16	27	12	80
L-41-63	63	16	74	40	21	32	15.5	89
L-41-80	80	20	94	50	22	36	16	99,5
L-41-100	100	20	114	60	27	41	20	117,5
L-32-125	125	25	140	70	30	50	25	142

Rear trunnion ball-joint Mod. R



* This trunnion doesn't comply with the ISO 15552 standard
Material: Aluminium

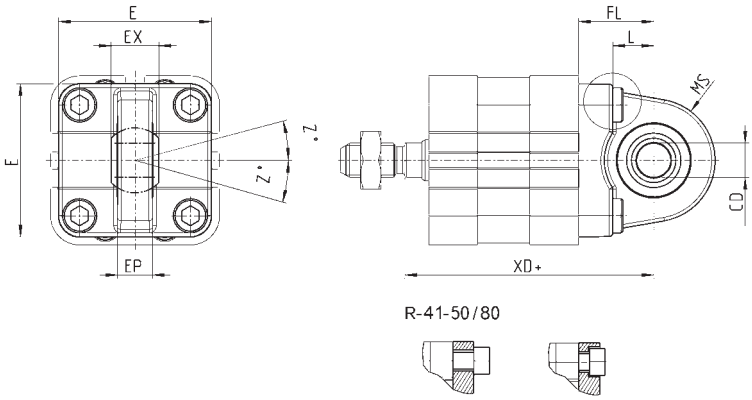

Supplied with:
1x ball joint
4x screws

+ = add the stroke

DIMENSIONS										
Mod.	Ø	ø CD	E	EX	EP	L	FL	MS	XD+	Z°
R-41-32	32	10	45	14	10,5	12	22	16	73	4
R-41-40	40	12	52	16	12	15	25	19	77	4
R-41-50*	50	12	62,5	16	12	15	27	21	80	4
R-50	50	16	65	21	15	16	27	21,5	80	4
R-41-63	63	16	75	21	15	20	32	24	89	4
R-41-80*	80	16	92	21	15	24	36	28	99,5	4
R-80	80	20	95	25	18	22	36	28,5	99,5	4
R-41-100	100	20	115	25	18	27	41	30	117,5	4
R-41-125	125	30	140	37	25	30	50	40	142	4

Products designed for industrial applications.
General terms and conditions for sale are available on www.camozzi.com.

Accessory combination Mod. C+L+S



Material: Aluminium.

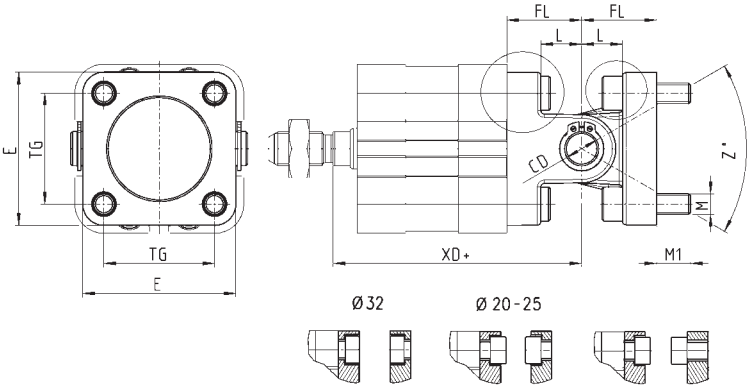

+ = add the stroke

Mod.	Ø	ø CD	E	L	FL	M	M1	TG	XD+	Z° (max)
C+L+S	32	10	47	12,5	22	M6	10,5	32,5	73	30
C+L+S	40	12	52	16	25	M6	10,5	38	77	40
C+L+S	50	12	64	16	27	M8	11,5	46,5	80	25
C+L+S	63	16	74	21	32	M8	13,5	56,5	89	36
C+L+S	80	16	93	22	36	M10	15	72	99,5	34
C+L+S	100	20	114	27	41	M10	15	89	117,5	38
C+L+S	125	30	140	30	50	M12	15	110	142	30

90° male trunnion Mod. ZC



Material: Aluminium.

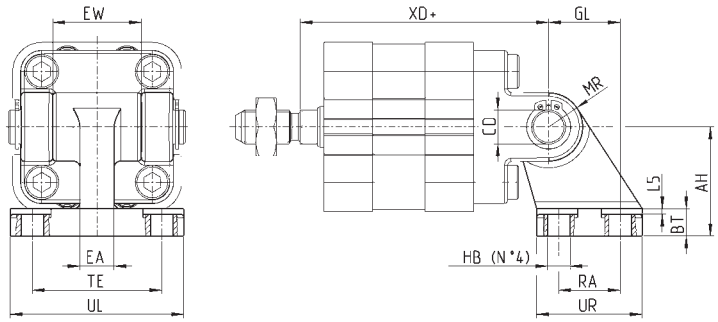

Supplied with:
1x male support

+ = add the stroke

DIMENSIONS															
Mod.	Ø	AH	BT	ø CD	EA	EW	GL	ø HB	L5	MR	RA	UL	UR	TE	XD+
ZC-32	32	32	8	10	10	26	21	6,6	1,6	10	18	51	31	38	73
ZC-40	40	36	10	12	15	28	24	6,6	1,6	11	22	54	35	41	77
ZC-50	50	45	12	12	16	32	33	9	1,6	13	30	65	45	50	80
ZC-63	63	50	14	16	16	40	37	9	1,6	15	35	67	50	52	89
ZC-80	80	63	14	16	20	50	47	11	2,5	15	40	86	60	66	99,5
ZC-100	100	71	17	20	20	60	55	11	2,5	19	50	96	70	76	117,5
ZC-125	125	90	20	25	30	70	70	14	3,2	22,5	60	124	90	94	142

Front/rear spot faced trunnion Mod. FN

Material: zinc-plated steel



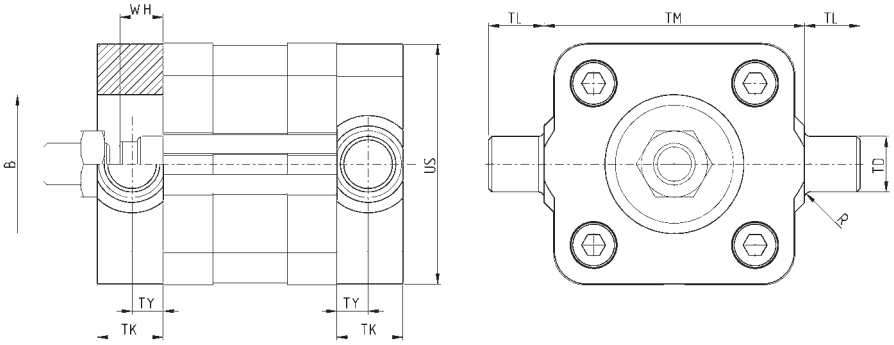

Supplied with:
1x centre spot faced trunnion
4x screws

+ = add the stroke

Mod.	Ø	TK	TY	WH	ø B	US	TL	TM	ø TD	R
FN-32	32	14	6,5	7	30	46	12	50	12	1
FN-40	40	19	9	7	35	59	16	63	16	1,5
FN-50	50	19	9	8	40	69	16	75	16	1,6
FN-63	63	24	11,5	8	45	84	20	90	20	1,6
FN-80	80	24	11,5	9,5	45	102	20	110	20	1,6
FN-100	100	29	14	9,7	55	125	25	132	25	2
FN-125	125	30	15	11	60	150	25	160	25	2

Opposed cylinder coupler Mod. DC-32

Material: Aluminium



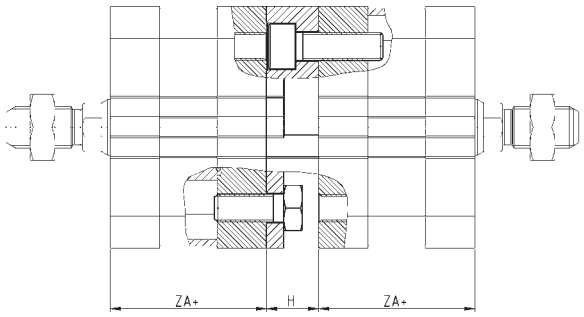

Supplied with:
1x flange
2x hex head screws
2x cylindrical head screws
2x centering rings*

+ = add the stroke
*Only from Ø50 to Ø125

Mod.	Ø	ZA+	H
DC-32-20	20	36,8	13
DC-32-25	25	38,8	13
DC-32-32	32	44	15
DC-32-40	40	45	15
DC-32-50	50	45	15
DC-32-63	63	49	15
DC-32-80	80	54	17
DC-32-100	100	66,8	19,5
DC-32-125	125	81	19,5

Products designed for industrial applications.
General terms and conditions for sale are available on www.camozzi.com.

90° swivel combination for trunnion Mod. I



Material: zinc-plated steel.

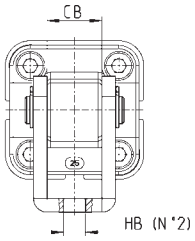

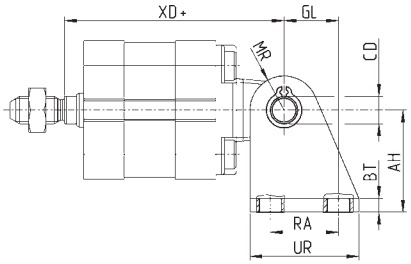

Supplied with:
1x female support
2x seeger
1x clevis pin

+ = add the stroke

DIMENSIONS											
Mod.	Ø	AH	BT	ø CD	CB	GL	ø HB	MR	RA	UR	XD+
I-12-16	16	27	3	6	12,1	13	5,5	7	15	25	55,7
I-20-25	20	30	4	8	16,1	16	6,5	10	20	32	62,5
I-20-25	25	30	4	8	16,1	16	6,5	10	20	32	64,5

Clevis pin Mod. S

Materials: Stainless steel Clevis pin, Steel Seeger



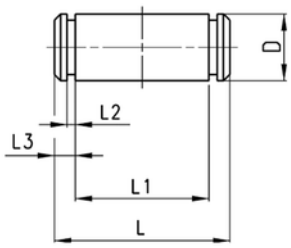

Supplied with:
1x clevis pin in stainless steel
2x Seeger in steel

DIMENSIONS						
Mod.	Ø	ø D	L	L1	L2	L3
S-32	32	10	52	46	1,1	3
S-40	40	12	59	53	1,1	3
S-50	50	12	67	61	1,1	3
S-63	63	16	77	71	1,1	3
S-80	80	16	97	91	1,1	3
S-100	100	20	121	111	1,3	5
S-125	125	25	140,5	132	1,3	4,25

Rod fork end Mod. G



ISO 8140
Material: zinc-plated steel.

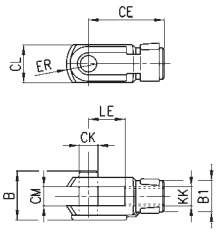

DIMENSIONS										
Mod.	Ø	øCK	LE	CM	CL	ER	CE	KK	B	øB1
G-12-16	16	6	12	6	12	7	24	M6x1	16	10
G-20	20 - 25	8	16	8	16	10	32	M8x1,25	22	14
G-25-32	32 - 40	10	20	10	20	12	40	M10x1,25	26	18
G-40	50 - 63	12	24	12	24	14	48	M12x1,25	32	20
G-50-63	80 - 100	16	32	16	32	19	64	M16x1,5	40	26
G-80-100	125	20	40	20	40	25	80	M20x1,5	48	34

Piston rod socket joint Mod. GY

Material: zama and zinc-plated steel.



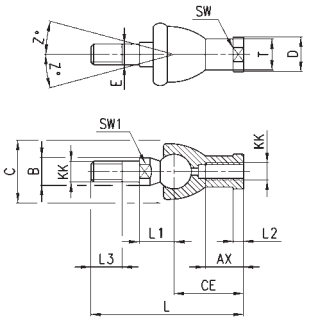

DIMENSIONS																
Mod.	Ø	KK	L	CE	L2	AX	SW	SW1	L1	L3	øT	øD	øE	øB	øC	Z
GY-12-16	16	M6x1	55	28	5	15	11	8	12,2	11	10	13	6	10	20	15
GY-20	20 - 25	M8x1,25	65	32	5	16	14	10	16	12	12,5	13	6	10	20	15
GY-32	32 - 40	M10x1,25	74	35	6,5	18	17	11	19,5	15	15	19	10	14	28	15
GY-40	50 - 63	M12x1,25	84	40	6,5	20	19	17	21	17	17,5	22	12	19	32	15
GY-50-63	80 - 100	M16x1,5	112	50	8	27	22	19	27,5	23	22	27	16	22	40	11
GY-80-100	125	M20x1,5	133	63	10	38	30	24	31,5	25	27,5	34	20	27	45	7,5

Products designed for industrial applications.
General terms and conditions for sale are available on www.camozzi.com.

Swivel ball joint Mod. GA



ISO 8139
Material: zinc-plated steel

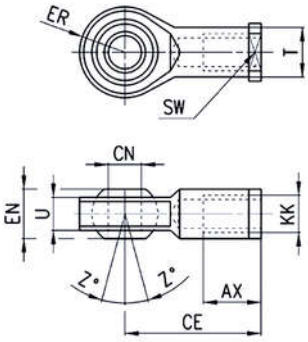

Mod.	Ø	ø CN	U	EN	ER	AX	CE	KK	ø T	Z	SW
GA-12-16	16	6	7	9	10	12	30	M6x1	10	6,5	11
GA-20	20 - 25	8	9	12	12	16	36	M8x1,25	12,5	6,5	14
GA-32	32 - 40	10	10,5	14	14	20	43	M10x1,25	15	6,5	17
GA-40	50 - 63	12	12	16	16	22	50	M12x1,25	17,5	6,5	19
GA-50-63	80 - 100	16	15	21	21	28	64	M16x1,5	22	7,5	22
GA-80-100	125	20	18	25	25	33	77	M20x1,5	27,5	7	30

Piston rod lock nut Mod. U



ISO 4035
Materials: zinc-plated steel.

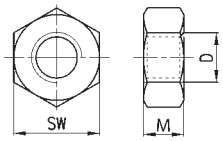

DIMENSIONS				
Mod.	Ø	D	M	SW
U-12-M5	12	M5x0,8	5	8
U-12-16	16	M6x1	4	10
U-20	20 - 25	M8x1,25	5	13
U-25-32	32 - 40	M10x1,25	6	17
U-40	50 - 63	M12x1,25	7	19
U-50-63	80 - 100	M16x1,5	8	24
U-80-100	125	M20x1,5	9	30

Products designed for industrial applications.
General terms and conditions for sale are available on www.camozzi.com.

Centring sleeve Mod. TR



Supplied with:
1x anodized AL centring ring

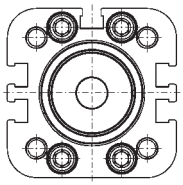

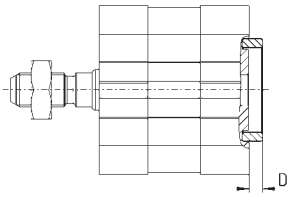

Designed for the centring of both rear and front end caps with brackets Mod. B/D-E/C/C-H/H/L/R, as for the centring of the cylinder while mounting.

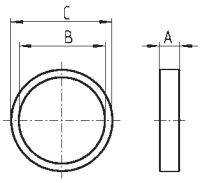

DIMENSIONS					
Mod.	Ø	A	ø B	ø C	D
TR-32-32	32	6	25	30	4
TR-32-40	40	6	30	35	4
TR-32-50	50	6	35	40	4
TR-32-63	63 - 80	7	40	45	5
TR-32-100	100	7	50	55	5

Centring pin Mod. TS-32-20

Material: anodized AL
Usable for size 12-16-20-25-32-40



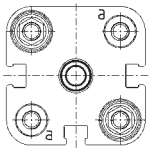

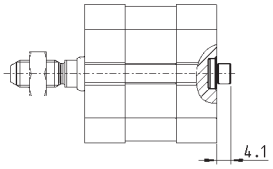

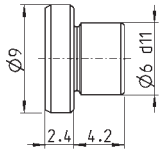

Mod.
TS-32-20

Products designed for industrial applications.
General terms and conditions for sale are available on www.camozzi.com.

Self aligning rod Mod. GK



Only for cylinders with male rod.
Material: zinc-plated steel.

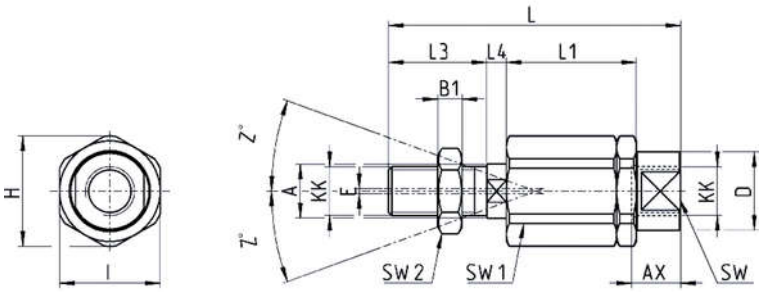

DIMENSIONS																	
Mod.	Ø	KK	L	L1	L3	L4	øA	øD	H	I	SW	SW1	SW2	B1	AX	Z	E
GK-12-16	16	M6x1	35	17,5	11	2,5	6	8,5	14,5	13	7	5	10	4	12,5	3	1
GK-20	20 - 25	M8x1,25	57	26	21	5	8	12,5	19	17	11	7	13	4	16	4	2
GK-25-32	32 - 40	M10x1,25	71,5	35	20	7,5	14	22	32	30	19	12	17	5	22	4	2
GK-40	50 - 63	M12x1,25	75,5	35	24	7,5	14	22	32	30	19	12	19	6	22	4	2
GK-50-63	80 - 100	M16x1,5	104	53	32	10	22	32	45	41	27	20	24	8	30	3	2
GK-80-100	125	M20x1,5	119	53	40	10	22	32	45	41	27	20	30	10	37	3	2

Coupling piece Mod. GKF



Material: zinc-plated steel.

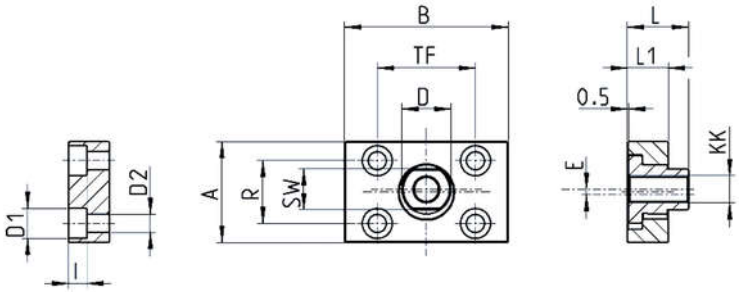

Mod.	Ø	KK	A	B	R	TF	L	L1	I	øD	ø D1	øD2	SW	E
GKF-20	20 - 25	M8x1,25	30	35	20	25	22,5	10	-	14	5,5	-	13	1,5
GKF-25-32	32 - 40	M10x1,25	37	60	23	36	22,5	15	6,8	18	11	6,6	15	2
GKF-40	50 - 63	M12x1,25	56	60	38	42	22,5	15	9	20	15	9	15	2,5
GKF-50-63	80 - 100	M16x1,5	80	80	58	58	26,5	15	10,5	25	18	11	22	2,5
GFK-80-100	125	M20x1,5	90	90	65	65	32,5	20	13	30,5	20	14	27	2,5

Products designed for industrial applications.
General terms and conditions for sale are available on www.camozzi.com.

Magnetic proximity switches with 2 or 3 wire cable for T-slot



Further details can be found in the "Proximity switch" chapter.

Note for 2-wire switches Mod. CST-220, CST-220-5:
in case of polarity reversing the sensor will still be operating, but the LED diode won't turn on.

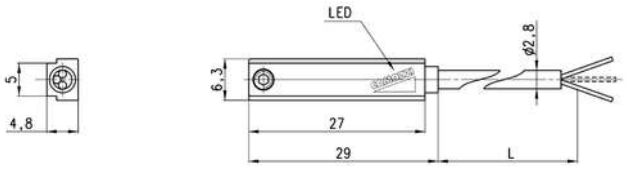

Mod.	Operation	Connections	Voltage	Output	Max. current	Max Load	Protection	L = length cable
CST-220	Reed	2 wires	10 ÷ 110 V AC/DC-230 V AC	-	250 mA	10 VA / 8W	None	2 m
CST-220-5	Reed	2 wires	10 ÷ 110 V AC/DC-230 V AC	-	250 mA	10 VA / 8 W	None	5 m
CST-220-12	Reed	2 wires	10 ÷ 110 V AC/DC-230 V AC	-	250 mA	10 VA / 8W	None	12 m
CST-220EX	Reed	2 wires	10 ÷ 110 V AC/DC-230 V AC	-	250 mA	10 VA / 8W	None	2 m
CST-220-5EX	Reed	2 wires	10 ÷ 110 V AC/DC-230 V AC	-	250 mA	10 VA / 8W	None	5 m
CST-220-12EX	Reed	2 wires	10 ÷ 110 V AC/DC-230 V AC	-	250 mA	10 VA / 8W	None	12 m
CST-232	Reed	3 wires	5 ÷ 30 V AC/DC	PNP	250 mA	10 VA / 8 W	Against polarity reversing	2 m
CST-232-5	Reed	3 wires	5 ÷ 30 V AC/DC	PNP	250 mA	10 VA / 8 W	Against polarity reversing	5 m
CST-232EX	Reed	3 wires	5 ÷ 30 V AC/DC	PNP	250 mA	10 VA / 8W	Against polarity reversing	2 m
CST-232-5EX	Reed	3 wires	5 ÷ 30 V AC/DC	PNP	250 mA	10 VA / 8W	Against polarity reversing and overvoltage	5 m
CST-332	Magnetoresistive	3 wires	10 ÷ 27 V DC	PNP	100 mA	6 W	Against polarity reversing and overvoltage	2 m
CST-332-5	Magnetoresistive	3 wires	10 ÷ 27 V DC	PNP	100 mA	6 W	Against polarity reversing and overvoltage	5 m
CST-332EX	Magnetoresistive	3 wires	10 ÷ 27 V DC	PNP	100 mA	6 W	Against polarity reversing and overvoltage	2 m
CST-332-5EX	Magnetoresistive	3 wires	10 ÷ 27 V DC	PNP	100 mA	6 W	Against polarity reversing and overvoltage	5 m
CST-432	Reed	3 wires	5 ÷ 30 V AC/DC	PNP-NC	250 mA	10 VA / 8 W	Against polarity reversing	2 m
CST-432-5	Reed	3 wires	5 ÷ 30 V AC/DC	PNP-NC	250 mA	10 VA / 8 W	Against polarity reversing	5 m
CST-432EX	Reed	3 wires	5 ÷ 30 V AC/DC	PNP-NC	250 mA	10 VA / 8 W	Against polarity reversing	2 m
CST-432-5EX	Reed	3 wires	5 ÷ 30 V AC/DC	PNP-NC	250 mA	10 VA / 8 W	Against polarity reversing	5 m
CST-532	Hall effect	3 wires	10 ÷ 27 V DC	PNP	100 mA	6 W	Against polarity reversing and overvoltage	2 m
CST-532-5	Hall effect	3 wires	10 ÷ 27 V DC	PNP	100 mA	6 W	Against polarity reversing and overvoltage	5 m
CST-532EX	Hall effect	3 wires	10 ÷ 27 V DC	PNP	100 mA	6 W	Against polarity reversing and overvoltage	2 m
CST-532-5EX	Hall effect	3 wires	10 ÷ 27 V DC	PNP	100 mA	6 W	Against polarity reversing and overvoltage	5 m

Magnetic proximity switches wtih M8 3-pin connector for H-slot



Cable length: 0.3 m

Further details can be found in the "Proximity switch" chapter.

Note for 2-wire switch Mod. CSH-253:
in case of polarity reversing the sensor will still be operating, but LED diode won't turn on.

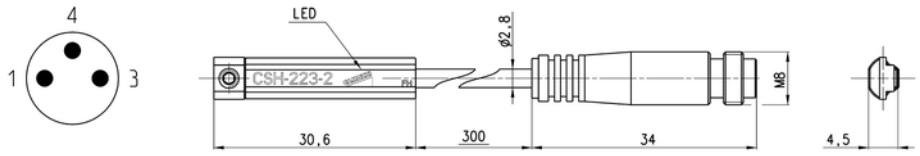

Mod.	Operation	Connection	Voltage	Output	Max current	Max load	Protection
CSH-253	Reed NO	2 wires M8 male 3 pin	10 ÷ 30 V AC/DC	-	250 mA	10 VA / 8 W	Against polarity reversing
CSH-253EX	Reed NO	2 wires M8 male 3 pin	10 ÷ 30 V AC/DC	-	250 mA	10 VA / 8 W	Against polarity reversing
CSH-263	Reed NO	3 wires M8 male 3 pin	10 ÷ 30 V AC/DC	PNP	250 mA	10 VA / 8 W	Against polarity reversing
CSH-263EX	Reed NO	3 wires M8 male 3 pin	10 ÷ 30 V AC/DC	PNP	250 mA	10 VA / 8 W	Against polarity reversing
CSH-364	Magnetoresistive	3 wires M8 male 3 pin	10 ÷ 27 V DC	PNP	250 mA	6 W	Against polarity reversing and overvoltage
CSH-364EX	Magnetoresistive	3 wires M8 male 3 pin	10 ÷ 27 V DC	PNP	250 mA	6 W	Against polarity reversing and overvoltage
CSH-463	Reed NC	3 wires M8 male 3 pin	10 ÷ 30 V AC/DC	PNP	250 mA	10 VA / 8 W	Against polarity reversing
CSH-463EX	Reed NC	3 wires M8 male 3 pin	10 ÷ 30 V AC/DC	PNP	250 mA	10 VA / 8 W	Against polarity reversing

Products designed for industrial applications.
General terms and conditions for sale are available on www.camozzi.com.

Magnetic proximity switches, ATEX "II 3 GD" certified, T-slot, straight



Note for 2-wire switches Mod. CSG-223-2-EX, CSG-223-5-EX, CSG-324-2-EX, CSG-324-5-EX:
in case of polarity reversing the sensor will still be operating, but the LED diode won't turn on.

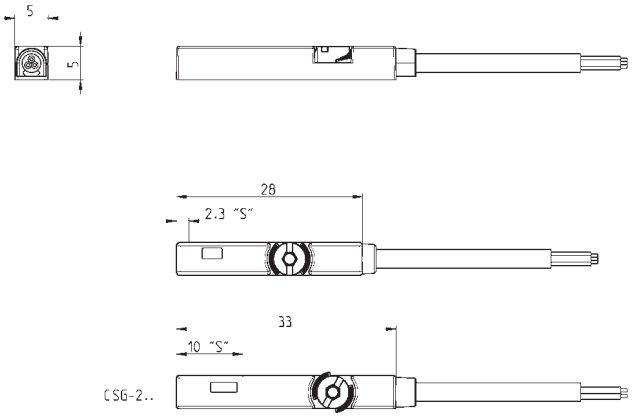

Further details can be found in the "Proximity switch" chapter.

Mod.	Operation	Connection	Voltage	Output	Max current	Max load	Protection
CSG-223-2-EX	Reed NO	2 wires	5 ÷ 30 V AC/DC	-	100 mA	3 W	IP67
CSG-223-5-EX	Reed NO	2 wires	5 ÷ 30 V AC/DC	-	100 mA	3 W	IP67
CSG-233-2-EX	Reed NO	3 wires	10 ÷ 30 V AC/DC	-	500 mA	10 W	IP67
CSG-233-5-EX	Reed NO	3 wires	10 ÷ 30 V AC/DC	-	500 mA	10 W	IP67
CSG-324-2-EX	Magnetoresistive NO	2 wires	10 ÷ 28 V DC	-	50 mA	1,5 W	IP67
CSG-324-5-EX	Magnetoresistive NO	2 wires	10 ÷ 28 V DC	-	50 mA	1,5 W	IP67
CSG-334-2-EX	Magnetoresistive NO	3 wires	10 ÷ 28 V DC	PNP	200 mA	5,5 W	IP67
CSG-334-5-EX	Magnetoresistive NO	3 wires	10 ÷ 28 V DC	PNP	200 mA	5,5 W	IP67
CSG-534-2-EX	Magnetoresistive NO	3 wires	10 ÷ 28 V DC	NPN	200 mA	5,5 W	IP67
CSG-534-5-EX	Magnetoresistive NO	3 wires	10 ÷ 28 V DC	NPN	200 mA	5,5 W	IP67
CSG-734-2-EX	Magnetoresistive NC	3 wires	10 ÷ 28 V DC	NPN	200 mA	5,5 W	IP67
CSG-734-5-EX	Magnetoresistive NC	3 wires	10 ÷ 28 V DC	NPN	200 mA	5,5 W	IP67
CSG-634-2-EX	Magnetoresistive NC	3 wires	10 ÷ 28 V DC	PNP	200 mA	5,5 W	IP67
CSG-634-5-EX	Magnetoresistive NC	3 wires	10 ÷ 28 V DC	PNP	200 mA	5,5 W	IP67

Magnetic proximity switches, UL certified, T-slot, straight



Note for 2-wire switches Mod. CSG-223-2-UL, CSG-223-5-UL, CSG-324-2-UL, CSG-324-5-UL:
in case of polarity reversing the sensor will still be operating, but the LED diode won't turn on.

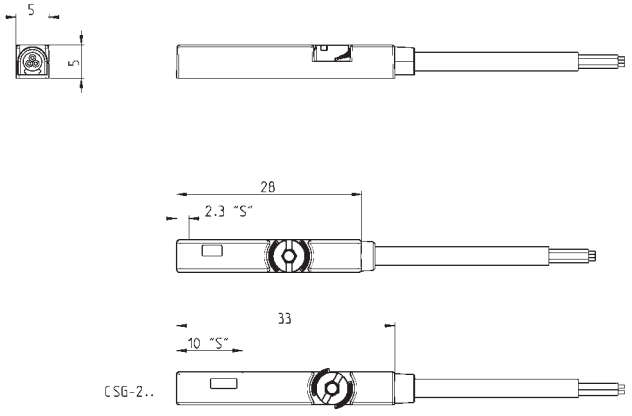

Further details can be found in the "Proximity switch" chapter.

Mod.	Operation	Connection	Voltage	Output	Max current	Max load	Protection
CSG-223-2-UL	Reed	2 wires	5 ÷ 30 V AC/DC	-	60 mA	1,8 W	IP67
CSG-223-5-UL	Reed	2 wires	5 ÷ 30 V AC/DC	-	60 mA	1,8 W	IP67
CSG-223-10-UL	Reed	2 wires	5 ÷ 30 V AC/DC	-	60 mA	1,8 W	IP67
CSG-233-2-UL	Reed	3 wires	10 ÷ 30 V AC/DC	-	100 mA	3 W	IP67
CSG-233-5-UL	Reed	3 wires	10 ÷ 30 V AC/DC	-	100 mA	3 W	IP67
CSG-233-10-UL	Reed	3 wires	10 ÷ 30 V AC/DC	-	100 mA	3 W	IP67
CSG-324-2-UL	Magnetoresistive	2 wires	10 ÷ 28 V DC	-	40 mA	1,2 W	IP67
CSG-324-5-UL	Magnetoresistive	2 wires	10 ÷ 28 V DC	-	40 mA	1,2 W	IP67
CSG-334-2-UL	Magnetoresistive	3 wires	10 ÷ 28 V DC	PNP	100 mA	3 W	IP67
CSG-334-5-UL	Magnetoresistive	3 wires	10 ÷ 28 V DC	PNP	100 mA	3 W	IP67
CSG-534-2-UL	Magnetoresistive	3 wires	10 ÷ 28 V DC	NPN	100 mA	3 W	IP67
CSG-534-5-UL	Magnetoresistive	3 wires	10 ÷ 28 V DC	NPN	100 mA	3 W	IP67