GEFRAN

GRN

HALL-EFFECT SINGLE-TURN ROTARY SENSOR WITHOUT SHAFT

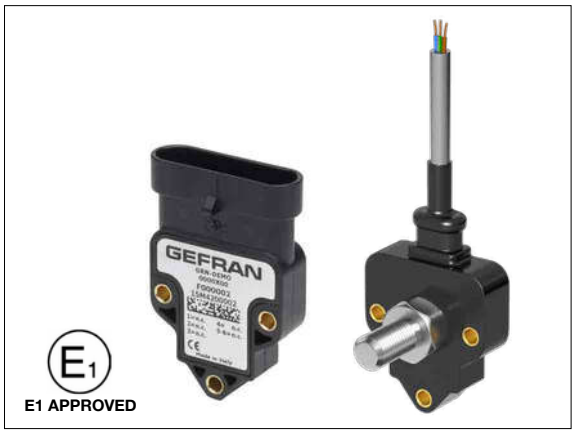

E1 APPROVED

Rotary sensor for measurement ranges up to 360° with ability to program analogue versions of ±15° steps.

Contactless Hall technology for almost infinite sensor life due to absence of wear on the sensing element.

Various configurations make the product easy to install on vehicles.

High IP protection level, resistance to shock and vibration, and high electromagnetic compatibility make these products suitable for many mobile hydraulics applications.

Developed to ensure a robust and high-performance solution for applications such as agricultural machines, construction machines, material handling equipments.

TECHNICAL DATA

Measurement range

±180° - different values on request programmable in steps of ±15° (ONLY for analogue versions)

Supply voltage

+5Vdc (only for 0.5..4.5Vdc output); +9…+36Vdc (see output signal for right supply voltage)

Output signal

0.5...4.5Vdc RATIOMETRIC (supply +5Vdc); 0.5...4.5Vdc; 0...10Vdc; 4...20mA; CANopen, SAE J1939

Electrical connections

AMP Superseal 6P 282108-1; cable output - PUR sheath conductors 22 AWG Ø 4.4 (single) - Ø 5.5 (redundant); cable output + M12 5 pin male overprinted connector

Resolution and speed of rotation

12 bit (analog output); 14 bit (CANopen/SAE J1939 output); 120 rpm max.

Linearity

< ±0.5%FS

Working and coefficient temperature

-40°C ... +85°C (higher values on request); thermal drift < 50 ppm/°C

Vibrations

20g - 10 Hz … 2000 Hz IEC 60068-2-6

Shock

Impulsive on 3 axes; 50g 11 ms IEC 60068-2-27

Electromagnetic compatibility

2014/30/EU Electromagnetic Compatibility (EMC)

Life

Virtually no wear through the use of permanent external magnet

IP Protection level

IP67 - IPX9K with female mating connector mounted AMP282090-1 (GRN-A version);
IP67 - IPX9K(GRN-F cable-PUR version);
IP67 with female homologated connector mounted, tightening torque 0.6Nm + low strenght threadlocker (GRN-F cable+M12 connector version)

Housing material

PBT

MECHANICAL DIMENSIONS

AMP VERSION

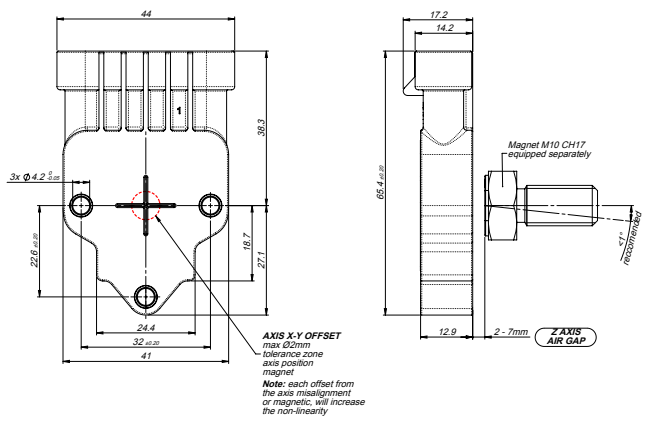

CABLE VERSION

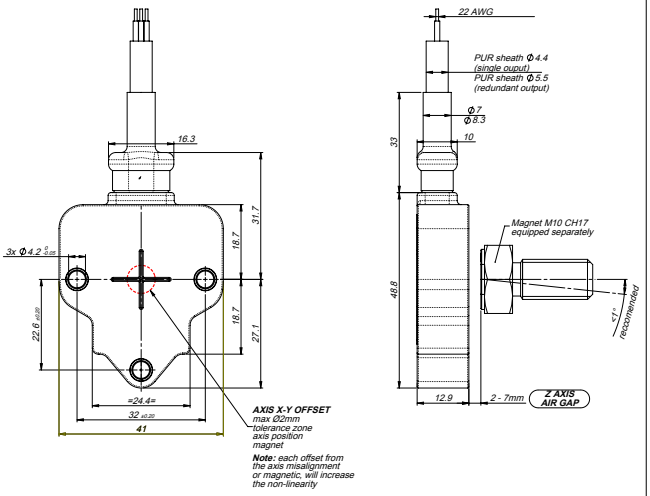

ELECTRICAL CONNECTIONS

AMP VERSION

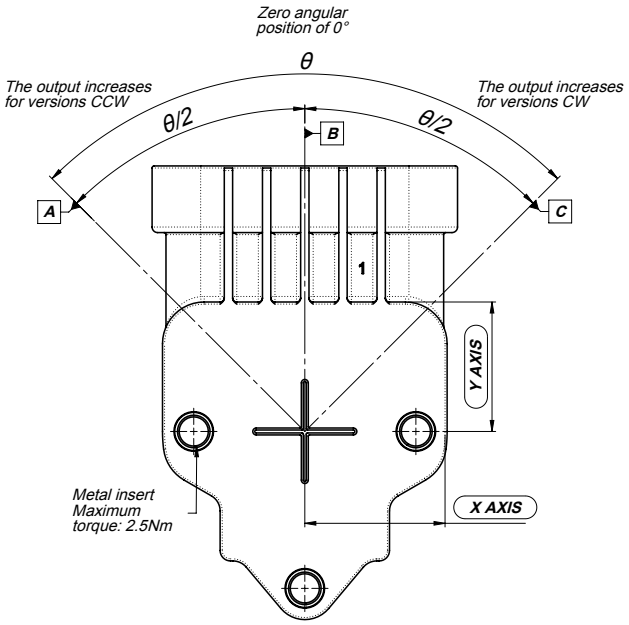

Reference	Output CW	Output CCW
A	Output : 0.5 Vdc	Output : 4.5 vdc
B	Zero angular position of 0°	Zero angular position of 0°
C	Output : 4.5 Vdc	Output : 0.5 Vdc

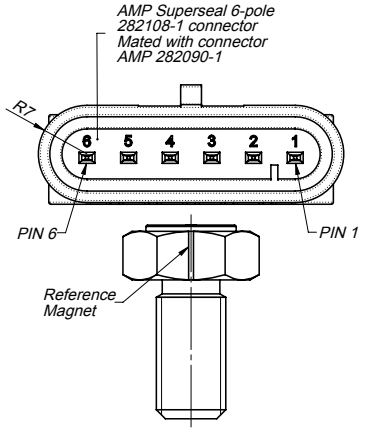

ANALOG CONNECTIONS SINGLE VERSION

1. GROUND 1
2. + SUPPLY 1
3. OUTPUT 1
4. n.c.
5. n.c.
6. n.c.

ANALOG CONNECTIONS REDUNDANT VERSION

1. GROUND 1
2. + SUPPLY 1
3. OUTPUT 1
4. GROUND 2
5. + SUPPLY 2
6. OUTPUT 2

CONNECTIONS CAN/J1939

1. GROUND
2. + SUPPLY
3. n.c.
4. n.c.
5. CAN-L
6. CAN-H

ITEMS MARKED "n.c." MUST NOT BE CONNECTED

CABLE VERSION

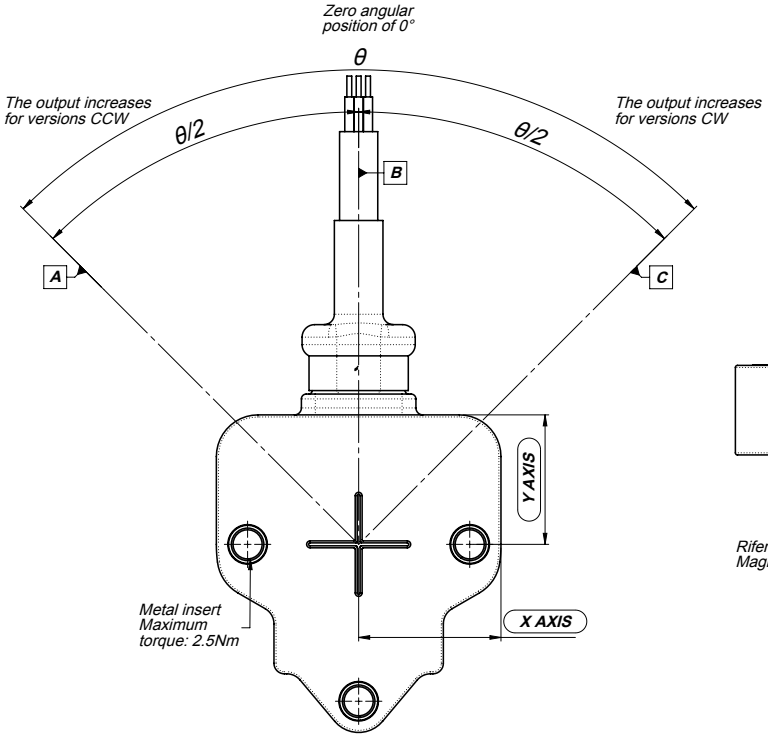

Reference	Output CW	Output CCW
A	Output : 0.5 Vdc	Output : 4.5 vdc
B	Zero angular position of 0°	Zero angular position of 0°
C	Output : 4.5 Vdc	Output : 0.5 Vdc

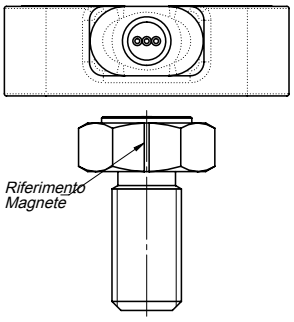

ANALOG CONNECTIONS SINGLE VERSION

BLACK GROUND 1
RED + SUPPLY 1
YELLOW OUTPUT 1

ANALOG CONNECTIONS REDUNDANT VERSION

BLACK GROUND 1
RED + SUPPLY 1
YELLOW OUTPUT 1
GREEN GROUND 2
BLUE + SUPPLY 2
WHITE OUTPUT 2

CONNECTIONS CAN/J1939

BLACK GROUND
RED + SUPPLY
BLUE CAN-L
WHITE CAN-H

CABLE+M12 VERSION

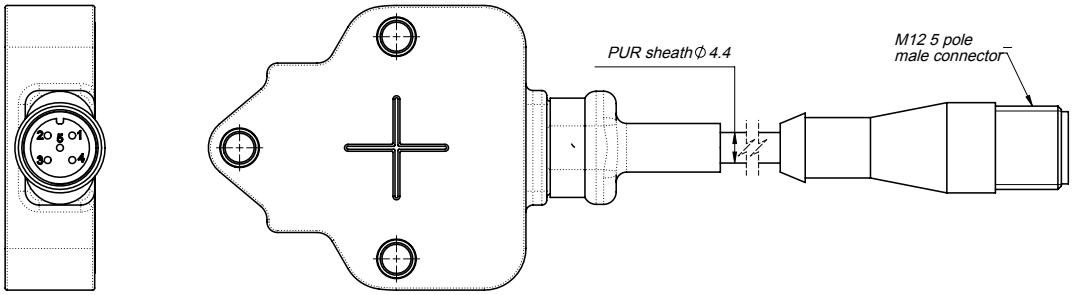

ANALOG CONNECTIONS SINGLE VERSION

1. GROUND 1
2. + SUPPLY 1
3. OUTPUT 1
4. n.c.
5. n.c.

ANALOG CONNECTIONS REDUNDANT VERSION

1. + SUPPLY 1-2
2. OUTPUT 2
3. GROUND 1-2
4. OUTPUT 1
5. n.c.

CONNECTIONS CAN/J1939

1. n.c.
2. + SUPPLY
3. GROUND
4. CAN H
5. CAN L

ITEMS MARKED "n.c." MUST NOT BE CONNECTED

MAGNETS (ACCESSORIES)

MAGNETS FEATURES:

- magnet should **NOT** be incorporated in a ferromagnetic housing (holder)
- magnet must **NOT** be installed in close contact with a surface of ferromagnetic material
- if the magnet is incorporated in a housing (holder) of ferromagnetic material or is installed in close contact with a surface of ferromagnetic material the magnetic field **is reduced**
- if the magnetic field is reduced the **AIR GAP** value is no longer guaranteed up to 7mm and the working useful distance magnet-sensor is reduced at <5mm
- if the application does not allow to use a material for the magnet bearing surface is necessary to **raise the magnet** of at least 1cm
- to raise the magnet of at least 1cm from the ferromagnetic surface we recommend to use NON **ferromagnetic screws or spacers**
- the sensor must be mounted using **M4 screws in non-magnetic** stainless steel e.g. AISI 316 or brass

MODELS:

PKIT384 SHAFT KIT + MAGNET D15 M10 HEXAGONAL - ACCESSORY "A"
MAGNET M10 CH17
AIR GAP 2-7mm AXIS OFFSET Ø4mm

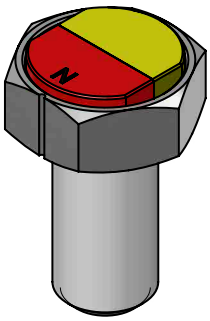

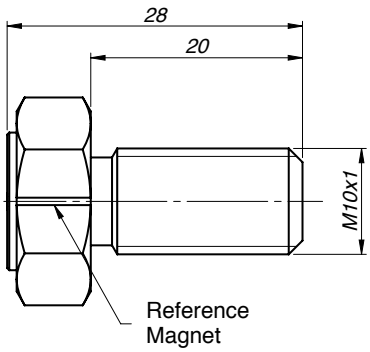

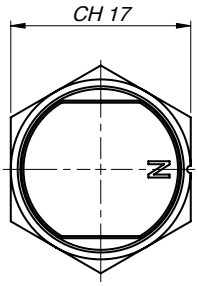

PKIT389 SHAFT KIT TO INSERT + MAGNET D15 - ACCESSORY "B"
PLUG TYPE MAGNET
AIR GAP 2-7mm AXIS OFFSET Ø4mm

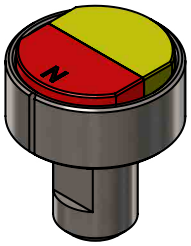

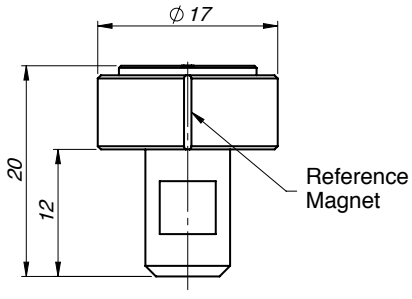

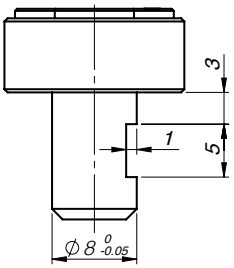

PKIT418 KIT MAGNET Ø15 - ACCESSORY "C"
KIT MAGNET Ø15
AIR GAP 2-7mm AXIS OFFSET Ø4mm

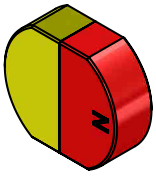

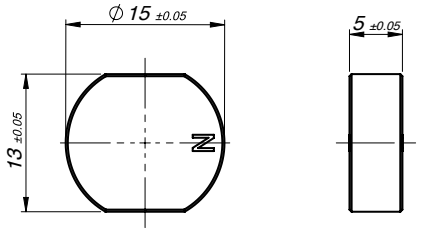

FUNCTIONS: SENSOR OUTPUT GRAPH

CLOCKWISE CW SINGLE DIRECTION OF ROTATION 1

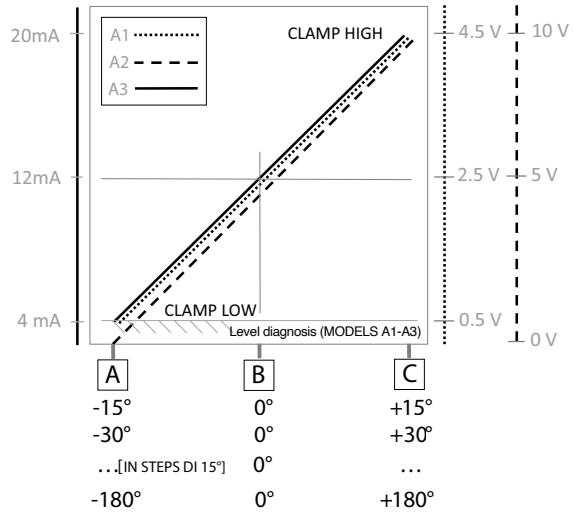

COUNTERCLOCKWISE CCW SINGLE DIRECTION OF ROTATION 2

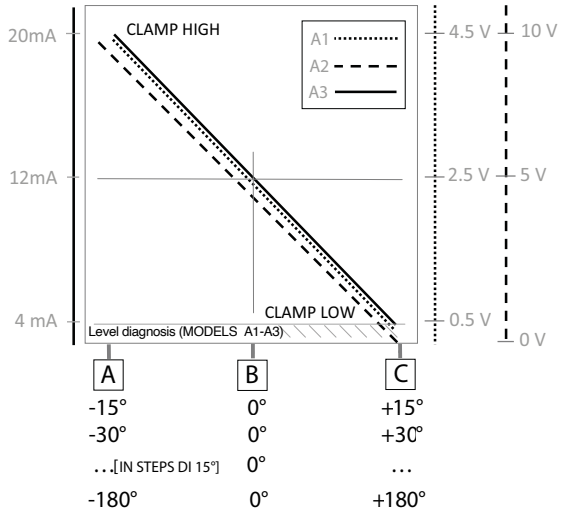

REDUNDANT DIRECTION OF ROTATION 1

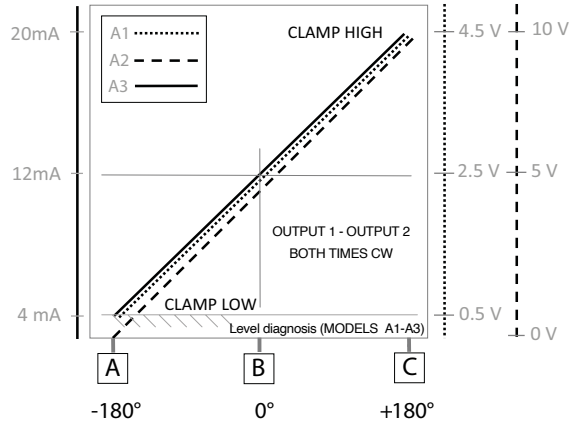

REDUNDANT DIRECTION OF ROTATION 2

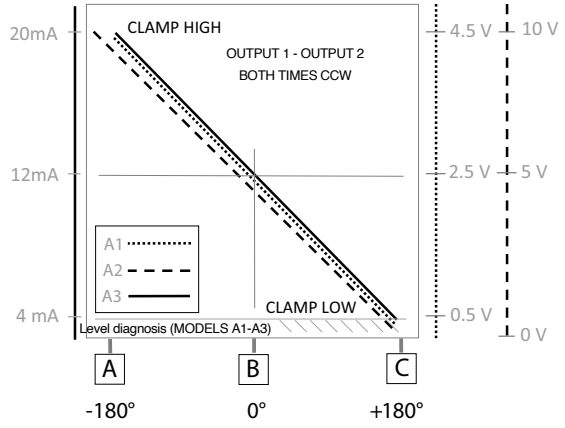

REDUNDANT DIRECTION OF ROTATION 3

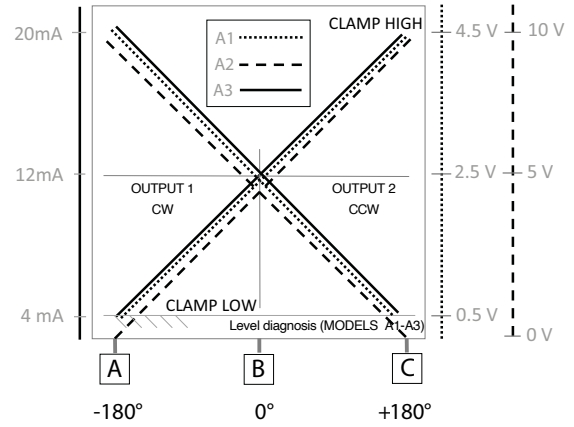

REDUNDANT DIRECTION OF ROTATION 4

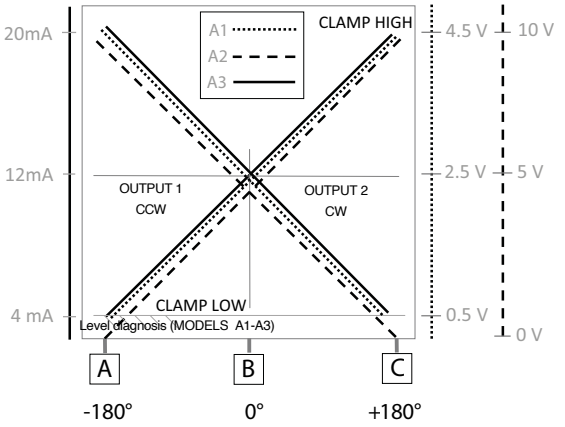

LOAD CONDITIONS

+0.5Vdc...+4.5 Vdc output with power +9...+36Vdc and +0..10Vdc output with power +11..36Vdc: it is recommended a load resistance > 100 KΩ

+0.5Vdc…+4.5 Vdc output with power +5 Vdc: it is recommended a load resistance > 10 KΩ

+4...20 mA output with power < 15Vdc up to 10Vdc: the maximum load resistance is admissible 200Ω

+4...20 mA output with power > 15Vdc up to 36Vdc: the maximum load resistance is admissible 500Ω

ORDERING CODE

ELECTRICAL CONNECTIONS	
AMP Superseal 6P connector output	**A**
cable output (specify cable length)	**F**

CIRCUIT TYPE	
Single	**S**
Redundant (only for analog outputs)	**R**

ANGLE/CHANNEL 1 (output for single channel)	
angular measuring range (indicate) (analogue output A1-A2-A3 programmable in steps of ±15°)	**XXX**

ANGLE/CHANNEL 2 (only for redundant versions)	
angular measuring range (indicate) (analogue output A1-A2-A3 programmable in steps of ±15°)	**XXX**

SUPPLY VOLTAGE	
+5Vdc (only for A1 output)	**L**
+9…+36Vdc (see output signal for right supply voltage)	**H**

OUTPUT TYPE	
+0.5…+4.5Vdc output (available with supply L = ratiometric output and with supply H = 0.5...4.5Vdc output)	**A1**
0...+10Vdc output (powered at +11..36Vdc)	**A2**
4...20mA output (powered at +9...36Vdc)	**A3**
CANopen output (powered at +9...36Vdc) (available in single version with +/-180° measurement range)	**C1**
SAE J1939 (powered at +9...36Vdc) (available in single version with +/-180° measurement range)	**C2**

ROTATION DIRECTION	
clockwise CW (single) both clockwise CW (redundant or CAN/J1939)	**1**
counterclockwise CCW (single) both counterclockwise CCW (redundant or CAN/J1939)	**2**
CHANNEL 1 clockwise CW and CHANNEL 2 counterclockwise CCW (only for redundant version and CAN/J1939)	**3**
CHANNEL 1 counterclockwise CCW and CHANNEL 2 clockwise CW (only for redundant version and CAN/J1939)	**4**

CABLE	
Single cable without connector (always “0” in case of GRN-A version)	**0**
Cable (100mm) + M12 5 pin male overprinted connector	**1**

CERTIFICATE	
0	No certificate attached
L	Linearity curve to be attached

ACCESSORIES	
X	No accessories
A	shaft kit + magnet D15 M10 hexagonal (PKIT384)
B	shaft kit to insert + magnet D15 (PKIT389)
C	kit magnet Ø15 (PKIT418)

CABLE LENGTH	
01	cable 100 mm
02	cable 200 mm
05	cable 500 mm
10	cable 1m
20	cable 2 m
.....	other lengths on request

ORDERING CODE

EXAMPLE OF DESCRIPTION: GRNAS180000HC14000 0000A00

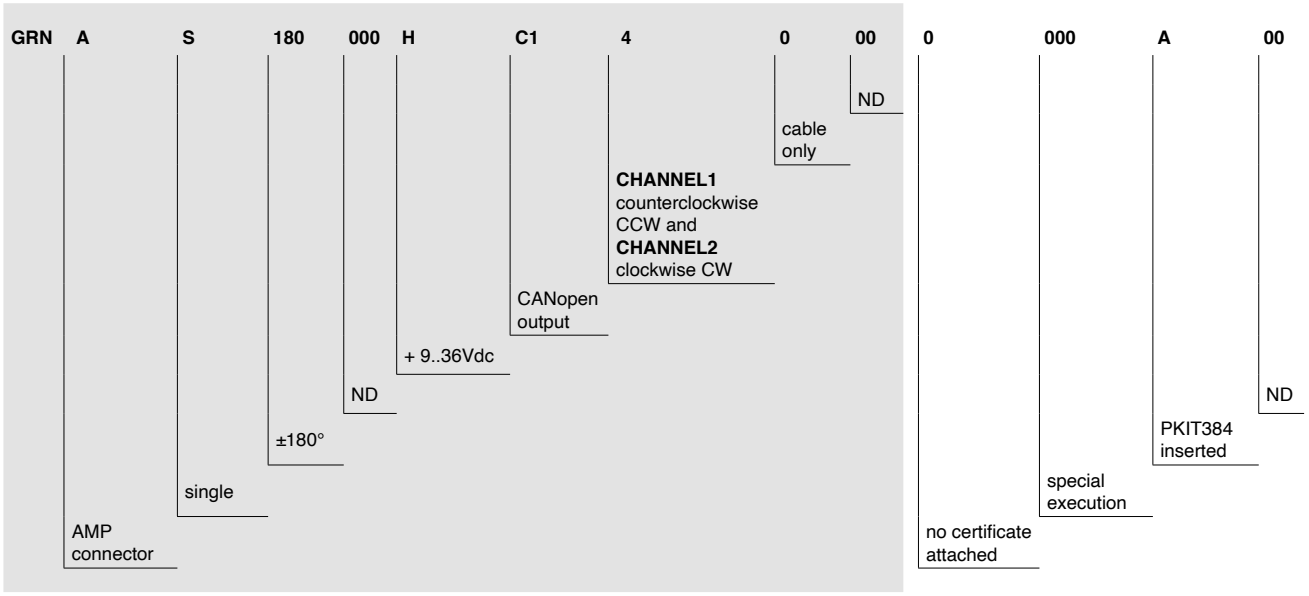

GEFRAN spa reserves the right to make any kind of design or functional modification at any moment without prior notice

GEFRAN spa
via Sebina, 74
25050 PROVAGLIO D'ISEO (BS) - ITALIA
tel. 0309888.1 - fax. 0309839063
Internet: http://www.gefran.com