TI00426F/00/EN/24.23
71628664
2023-09-07

Technical Information
Weld-in adapter, Process adapter and Flanges

Level, Pressure, Temperature



Application

The adapters and the flanges are used to connect level, pressure or temperature sensors to a vessel or a pipe.

Your benefits

- High-quality, corrosion resistant materials for use in aggressive media
- Versions without crevices and dead space of the weld-in adapters and the process adapters according to international hygiene regulations
- A variety of seals for application in diverse processes

Endress+Hauser

People for Process Automation

Table of contents

General information 4
Pressure equipment directive PED 2014/68/EU 4
Suitable for hygienic processes 4
Material conformity 4
CRN approval 4
Ordering information 4
Symbols 5

Weld-in adapter - overview Level 6

Weld-in adapter and accessories - Level 10
G ¾, d=29 for pipe-mounting 10
G ¾, d=50 for vessel-mounting 11
G ¾, d=55 with flange for flush-mounted installation 12
G 1, d=53 without flange for pipe-mounting 13
G 1, d=60 with flange for flush-mounted installation with sealing surface 14
G 1 sensor can be positioned 15
RD 52 sensor can be positioned 16
UNI D85 17
UNI D65 18
M24 D65 19
DRD DN50 (65 mm (2.56 in)) for flush-mounted installation of devices with DRD-flange 20
G 1¼ with thread adapter G 1 21

Weld-in adapter - overview Pressure 22

Weld-in adapter and accessories - Pressure 27
UNI D85 27
UNI D65 28
DRD DN50 (65 mm (2.56 in)) for flush-mounted installation of devices with DRD-Flange 29
M24 D65 30
G 1, d=53 without flange for pipe-mounting 31
G 1, d=60 with flange for flush-mounted installation with sealing surface 32
G 1½ flush-mounted 32
G 1 flush-mounted with metallic sealing taper 33
G ½ flush-mounted 33
G ½ DIN3852 33

Weld-in adapter - overview Temperature 34

Weld-in adapter and accessories - Temperature 36
G ¾, d=29 for pipe-mounting 36
G ¾, d=50 for vessel-mounting 37
G ¾, d=55 with flange for flush-mounted installation 38
G 1, d=53 without flange for pipe-mounting 39
G 1, d=60 with flange for flush-mounted installation with sealing surface 40
G 1 sensor can be positioned 41
Welding boss with sealing taper for thread G ½ or M12x1.5 42
Weld-in adapter for Ingold process connection 43
Welding boss with sealing taper with/without pressure screw 43

Hygiene process adapter Nivector FTI26 44
Process adapter G 1¼ Tri-Clamp 2" with threaded sleeve 44

Process adapter M24 - overview Level and Pressure 45

Process connection M24 - Level and Pressure 47
Varivent F DN32 PN40 47
Varivent N DN50 PN40 48
DIN11851 DN40 49
DIN11851 DN50 50
SMS 1½ 51
Clamp 1½ (DIN32676, ISO28552) 52
Clamp 2 (DIN32676, ISO28552) 53
APV-Inline 54

Process adapter UNI - overview Pressure 55

Process adapter UNI - Pressure 56
Clamp 2 56
Varivent N 57
DIN11851 DN40 58
DIN11851 DN50 59
DRD DN50 60

Flush mount pipe connection M24×1.5 - Level and Pressure 61
General 61
Pipe connection, weldable 61
Pipe connection, clamp connection 62

Mounting and welding hints 63
Weld-in adapter with leakage hole or leakage port 63
Notes for pressure measuring devices 63
Preparation 63
Welding procedure 64
Before mounting 64
Install measuring device 65
Pressure resistance 66

Flange - overview 67
Specifications 67
Versions 67
Flange Norm DIN EN 1092-1 67
Height of raised face 68

Mechanical Construction 69
EN flanges (DIN EN 1092-1) 69
PN16 69
PN25 69
PN40 70
PN63 70
PN100 70
ASME-Flange (ASME B16.5) 71
Class 150 71
Class 300 72

Class 600 72
Class 900 73
Class 1500 73
JIS flanges (B 2220) 74
10 K 74
20 K 74
63 K 75

Pressure-temperature dependencies 76
EN flanges 76
ASME flanges[1]) 76
JIS flanges[1]) 76

Slip-on flange FAU80 77
FAU80 Version slip-on flange 77

Screw in flange FAX50 78
FAX50 universal flange DIN-ASME-JIS 78
G ¾, NPT ¾ 78
G 1, NPT 1 79
G 1½, NPT 1½ 79
G 2, NPT 2 79

General information

NOTICE

Maximum pressure and temperature may be limited by the sensor installed in the adapter.

- Maximum design pressure and temperature stated is for the adapter only and not for the sensor being installed in the adapter. Consult sensor supplier for sensor pressure-temperature ratings.

Pressure equipment directive PED 2014/68/EU

The herein listed adapters are not subject to the pressure equipment directive independent of the maximum allowable amount of pressure, because they have no pressurised volume.

Suitable for hygienic processes

3-A and EHEDG







The listed connections in this documentation are EHEDG and 3-A approved.

Suitable for hygienic application, see also documentation "Hygienic Certificates", SD02503F.

Material conformity

The data concerning suitability for hygienic processes are listed under the relevant device version.
The weld-in adapters are manufactured according to the material specifications of the latest standards. Special versions of weld-in adapters, e.g. older material charges, must be requested and ordered via TSP workflow.

Seals:
Conform materials according to FDA 21 CFR (Code of Federal Regulations)

PART 177 - Indirect Food Additives: Polymers
- Part 177.1550: Perfluorocarbon resins (PTFE)
- Part 177.2600: Rubber articles intended for repeated use (EPDM, Silicone (VMQ), Viton (FKM))

Conform to regulation (EC) No. 1935/2004 on materials and articles intended to come into contact with food (European)

- BfR (Federal Institute for Risk Assessment) Recommendation XV. Commodities based on Silicones: Silicone (VMQ)
- BfR (Federal Institute for Risk Assessment) Recommendation XXI. Commodities based on Natural and Synthetic Rubber: EPDM, Viton (FKM)
- PTFE conform to regulation (EC) No. 10/2011

Metals:
Metals meet at least the voluntary Standard des Council of Europe des Council of Europe - EDQM-Guide "metals and alloys used in food contact materials and articles 2013 (1st edition)".

CRN approval

Versions with a CRN approval (Canadian Registration Number) are listed in the corresponding registration documents. CRN-approved devices are marked with a registration number.
Any restrictions regarding the maximum process pressure values are listed on the CRN certificate.
Adapters with CRN approval can be found on the Endress+Hauser website: www.endress.com → Downloads

Ordering information

Product Configurator: www.endress.com
Product Configurator - the tool for individual product configuration
- Up-to-the-minute configuration data
- Depending on the device: Direct input of measuring point-specific information such as measuring range or operating language
- Automatic verification of exclusion criteria
- Automatic creation of the order code and its breakdown in PDF or Excel output format
- Ability to order directly in the Endress+Hauser Online Shop

Symbols

Safety symbols

Symbol	Meaning
 A0011189-EN	**DANGER!** This symbol alerts you to a dangerous situation. Failure to avoid this situation will result in seriousor fatal injury.
 A0011190-EN	**WARNING!** This symbol alerts you to a dangerous situation. Failure to avoid this situation can result in seriousor fatal injury.
 A0011191-EN	**CAUTION!** This symbol alerts you to a dangerous situation. Failure to avoid this situation can result in minoror medium injury.
 A0011192-EN	**NOTICE!** This symbol contains information on procedures and other facts which do not result in personalinjury.

Symbols for certain types of information

Symbol	Bedeutung
 A0011193	Indicates additional information.
 A0039080	Please recycle a part of an device or the device itself if allowed.
1. , 2. , 3. ...	Series of steps

Weld-in adapter - overview Level

[Part 1] **Weld-in adapter - overview Level**	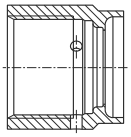 A0008246	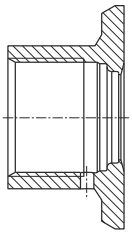 A0008251	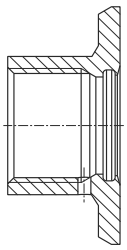 A0008256	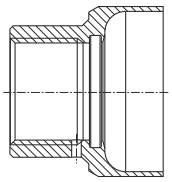 A0011924	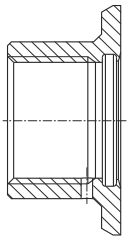 A0008248	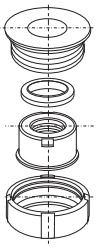 A0008253
	G ¾, d=29 for pipe-mounting	**G ¾, d=50 for vessel-mounting**	**G ¾, d=55 with flange**	**G 1, d=53 without flange**	**G 1, d=60 with flange**	**G 1 adjustable**
Material	316L (1.4435)	316L (1.4435)	316L (1.4435)	316L (1.4435)	316L (1.4435)	316L (1.4435)
Roughness µm (µin) process side	≤ 1,5 (59.1)	≤ 0,8 (31.5)	≤ 0,8 (31.5)	≤ 0,8 (31.5)	≤ 0,8 (31.5)	≤ 0,8 (31.5)
Order number weld-in adapter	71258357	71258355	52001052	71258358	52001051	52001221
Order number weld-in adapter with inspection certificate[1)]	52028295	52018765	52011897	71093129	52011896	52011898
Order number for seal replacement (5 pieces)	Silicone O-ring 52021717[2)]	Silicone O-ring 52021717[2)]	Silicone O-ring 52014473[2)]	Silicone O-ring 52014472[2)]	Silicone O-ring 52014472[2)]	Silicone profile gasket 52014424[3)]
Order number welding dummy[4)]	71174959	71174959	71168889	71166879	71166879	71181945
Order number blind plug[4)]	71167850	71167850	71177193	71580894	71580894	71166366
Order number blind plug with inspection certificate[1) 4)]	–	–	71190074	71167291	71167291	71196853

1) Inspection certificate EN10204-3.1 material; AD2000: The material 316L (in contact with process) corresponds to AD2000 – W0/W2/W10.

2) Already included in the scope of delivery of the weld-in adapter: 1 x standard seal, 1 x EPDM seal (EHEDG).

3) Already included in the scope of delivery of the weld-in adapter: 1 x standard seal.

4) TSP modification number. Can be ordered only FTSP, PTSP or NTSP.

[continue part 1] Weld-in adapter - overview Level	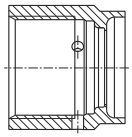 A0008246	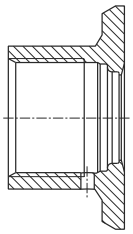 A0008251	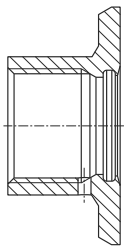 A0008256	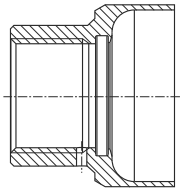 A0011924	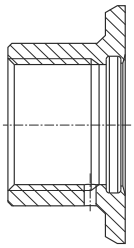 A0008248	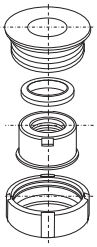 A0008253
	G ¾, d=29 for pipe-mounting	**G ¾, d=50 for vessel-mounting**	**G ¾, d=55 with flange**	**G 1, d=53 without flange**	**G 1, d=60 with flange**	**G 1 adjustable**
Measuring device **Liquicap**	**Suitable for process connection** option[1]					
FMI51	–	GQJ	–	GWJ	GWJ	–
FMI52	–	–	–	GWJ	GWJ	–
FTI51	–	GQJ	–	GWJ	GWJ	–
FTI52	–	–	–	GWJ	GWJ	–
Liquipoint						
FTW23, FTW33	W5J	W5J	–	WSJ	WSJ	–
Liquitrend						
QMW43	W5J	W5J	–	WSJ	WSJ	–
Rod probe						
11371	4	4	4	–	–	–
Liquiphant						
FTL33, FTL31	W5J	W5J	–	WSJ	WSJ	WSJ
FTL50, FTL50H	–	–	GQ2	GW2	GW2	GW2
FTL51, FTL51H	–	–	–	GW2	GW2	GW2
FTL41, FTL51B, FTL63	–	–	W5J[2]	WSJ	WSJ	WSJ
FTL51B	–	–	W5J[2]	WSJ	WSJ	WSJ
FTL80	–	–	WCJ	WSJ	WSJ	WSJ
FTL81	–	–	–	WSJ	WSJ	WSJ
Liquipoint	**Adapter as an accessory enclosed** option[3]					
FTW23, FTW33	PC/PD	PA/PB	–	PG/PH	PE/PF	–
Liquitrend						
QMW43	PC/PD	PA/PB	–	PG/PH	PE/PF	–
Liquiphant						
FTL31, FTL33	PC/PD	PA/PB	–	PG/PH	PE/PF	–
FTL41, FTL51B, FTL63	–	–	PO/PP	PG/PH	PE/PF	PI/PJ

1) The option can be selected in the Product Configurator via the order feature "Process Connection".

2) The option can be selected in the Product Configurator only available for the compact version via the order code "Type of probe", option 1 "compact version".

3) The option can be selected in the Product Configurator via the order feature "Accessory Enclosed".

[Part 2] **Weld-in adapter-overview Level**	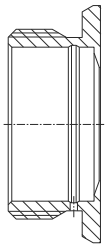 A0008252	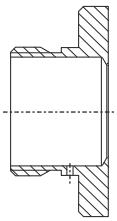 A0008245	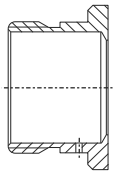 A0017639	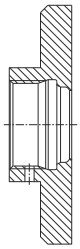 A0008552	 A0008254	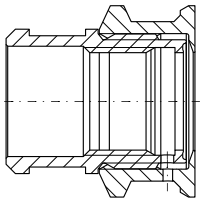 A0045641
	RD52	**UNI D85**	**UNI D65**	**M24 D65**	**DRD DN50 65 mm (2.56 in) (weld-in flange)**	**G 1¼" with thread adapter G 1"**
Material	316L (1.4435)	316L (1.4435)	316L (1.4435)	316L (1.4435)	316L (1.4435) 304 (1.4301)	316L (1.4404)
Roughness µm (µin) process side	≤ 0,8 (31.5)	≤ 0,76 (29.9)	≤ 0,76 (29.9)	≤ 0,76 (29.9)	≤ 0,76 (29.9)	≤ 0,76 (29.9)
Order number weld-in adapter	52001047	52006262	214880-0002	71041381	52002041/ 916743-0000	–
Order number weld-in adapter with inspection certificate[1)]	52006909	52010173	52010174	71041383	52011899/ –	71444432
Order number for seal replacement (5 pieces)[2)]	Silicone profile gasket 52014424	Silicone profile gasket 52023572	Silicone profile gasket 52023572	EPDM O-ring 52024267	PTFE flat seal 52024228	Silicone profile gasket 71075662
Order number welding dummy	71181945[3)]	71114210	71114210	–	71114209	–
Order number blind plug[3)]	71166366	71580894	71580894	71171418	71181450	–
Slotted nut	52021715	52021715	52021715	–	–	–

1) Inspection certificate EN10204-3.1 material; AD2000: The material 316L (in contact with process) corresponds to AD2000 – W0/W2/W10.

2) Already included in the scope of delivery of the weld-in adapter: 1 x standard seal.

3) TSP modification number. Can be ordered only FTSP, PTSP or NTSP.

[continue part 2] Weld-in adapter - overview Level	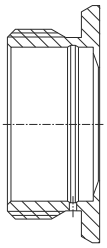 A0008252	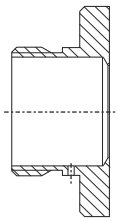 A0008245	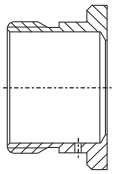 A0017639	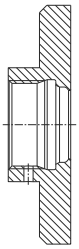 A0008552	 A0008254	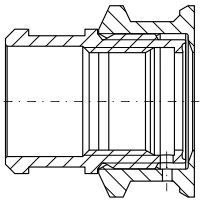 A0045641
	RD52	**UNI D85**	**UNI D65**	**M24 D65**	**DRD DN50 65 mm (2.56 in) (weld-in flange)**	**G 1¼" with thread adapter G 1"**
Measuring device **Liquicap**	**Suitable for process connection** option[1]					
FMI5x	–	UPJ	UPJ	–	–	–
FTI5x	–	UPJ	UPJ	–	–	–
Liquipoint						
FTW23, FTW33	–	–	–	X2J	–	–
Liquitrend						
QMW43	–	–	–	X2J	–	–
Liquiphant						
FTL33	5ZJ	–	–	X2J	–	–
FTL63	5ZJ	–	–	–	–	–
FTL5xH	EE2	–	–	–	PE2	–
Nivector						
FTI26	-	–	–	-	–	WDJ
Levelflex						
FMP41C	–	UPK/UQK	UPK/UQK	–	–	–
FMP43	–	–	–	U1J	–	–
FMP53	–	–	–	U1J	–	–
Liquipoint	**Adapter as an accessory enclosed** option[2]					
FTW23, FTW33	–	–	–	PM/PN	–	–
Liquitrend						
QMW43	–	–	–	PM/PN	–	–
Liquiphant						
FTL33	PO/PQ	–	–	PM/PN	–	–
FTL63	PR/PS	–	–	–	–	–
Nivector						
FTI26	–	–	–	–	–	PK

1) The option can be selected in the Product Configurator via the order feature "Process Connection".

2) The option can be selected in the Product Configurator via the order feature "Accessory Enclosed".

Weld-in adapter and accessories - Level

G ¾, d=29 for pipe-mounting

Dimensions mm (in)	Version	Order number
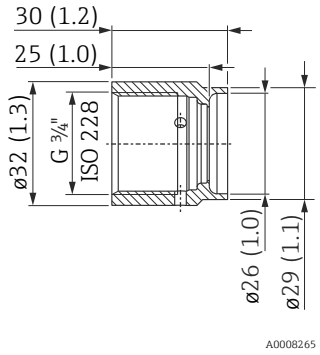 A0008265 Pressure and temperature range of the adapter ▪ max. 25 bar (362 psi) / max. 150 °C (302 °F) ▪ max. 40 bar (580 psi) / max. 100 °C (212 °F)	▪ Without inspection certificate ▪ With inspection certificate EN10204-3.1 material Material: AISI 316L (1.4435) Roughness (process side): Ra ≤ 1.5 µm (59.1 µin) Approved by CRN: 0F18434.5C	71258357 52028295
	Welding dummy for welding the weld-in adapter Material: Brass	71174959[1)]
	Blind plug for closing weld-in adapter Material: AISI 316L (1.4435) Roughness (process side): Ra ≤ 3.2 µm (126 µin)	71167850[1)]
Seals and pressure ring		**Order number**
 A0021901	**Standard seal**	
	Silicone O-ring, ø 14.9 x 2.7 mm (0.59 x 0.11 in) Material: VMQ 70 Conform according to FDA, 3-A For this version a simple replacement of the seal is possible.	52021717[2)] (5 pieces)
	Alternative seals	
	ø 15.08 x 2.62 mm (0.59 x 0.10 in) Material: EPDM Conform according to FDA, USP Class VI, EC1935, 3-A Approved by EHEDG	71529759[2)] (5 pieces)
	ø 15.08 x 2.62 mm (0.59 x 0.10 in) Material: FKM Conform according to FDA, USP Class VI, EC1935, 3-A Approved by EHEDG	71167890[1)] (5 pieces)
	ø14.9 x 2.7 mm (0.59 x 0.11 in) Material: Silicone VMQ 80 Conform according to FDA, USP Class VI, 3-A	71086117 (3 pieces)
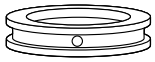 A0021902	**Pressure ring** Material: 316L (1.4435) ▪ The seal with pressure ring enables easy exchange of defective sealing rings.	52027421

1) TSP modification number. Can be ordered only FTSP, PTSP or NTSP.

2) Already included in the scope of delivery of the weld-in adapter: 1 x standard seal, 1 x EPDM seal (EHEDG).

G ¾, d=50 for vessel-mounting

Dimensions mm (in)	Version	Order number
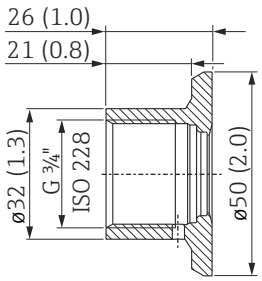 A0008810 Pressure and temperature range of the adapter of the adapter ▪ max. 25 bar (362 psi) / max. 150 °C (302 °F) ▪ max. 40 bar (580 psi) / max. 100 °C (212 °F)	▪ Without inspection certificate ▪ With inspection certificate EN10204-3.1 material Material: AISI 316L (1.4435) Roughness (process side): Ra ≤ 0.8 µm (31.5 µin) Approved by CRN: 0F18434.5C	71258355 52018765
	Welding dummy for welding the weld-in adapter Material: Brass	71174959[1)]
	Blind plug for closing weld-in adapter Material: AISI 316L (1.4435) Roughness (process side): Ra ≤ 3.2 µm (126 µin)	71167850[1)]
Seals and pressure ring		**Order number**
 A0021901	**Standard seal**	
	Silicone O-ring, ø 14.9 x 2.7 mm (0.59 x 0.11 in) Material: VMQ 70 Conform according to FDA, 3-A For this version a simple replacement of the seal is possible.	52021717[2)] (5 pieces)
	Alternative seals	
	ø 15.08 x 2.62 mm (0.59 x 0.10 in) Material: EPDM Conform according to FDA, USP Class VI, EC1935, 3-A Approved by EHEDG	71529759[2)] (5 pieces)
	ø 15.08 x 2.62 mm (0.59 x 0.10 in) Material: FKM Conform according to FDA, USP Class VI, EC1935, 3-A Approved by EHEDG	71167890[1)] (5 pieces)
	ø 14.9 x 2.7 mm (0.59 x 0.11 in) Material: Silicone VMQ 80 Conform according to FDA, USP Class VI, 3-A	71086117 (3 pieces)
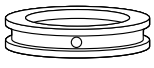 A0021902	**Pressure ring** Material: 316L (1.4435) The seal with pressure ring enables easy exchange of defective sealing rings.	52027421

1) TSP modification number. Can be ordered only FTSP, PTSP or NTSP.

2) Already included in the scope of delivery of the weld-in adapter: 1 x standard seal, 1 x EPDM seal (EHEDG).

G ¾, d=55 with flange for flush-mounted installation

Dimensions mm (in)	Version	Order number
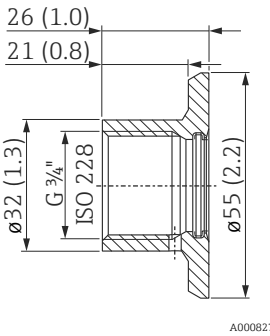 A0008274 Pressure and temperature range of the adapter ▪ max. 25 bar (362 psi) / max. 150 °C (302 °F) ▪ max. 40 bar (580 psi) / max. 100 °C (212 °F)	▪ Without inspection certificate ▪ With inspection certificate EN10204-3.1 material Material: AISI 316L (1.4435) Roughness (process side): Ra ≤ 0.8 µm (31.5 µin)	52001052 52011897
	Welding dummy for welding the weld-in adapter Material: Brass	71168889[1)]
	Blind plug for closing weld-in adapter ▪ Without inspection certificate ▪ With inspection certificate EN10204-3.1 material Material: AISI 316L (1.4435) Roughness (process side): Ra ≤ 0.76 µm (29.9 µin)	71177193[1)] 71190074[1)]
Seals, ø 21.89 x 2.62 mm (0.86 x 0.10 in)		**Order number**
 A0021901	**Standard seal**	
	Silicone O-ring Material: VMQ 70 Conform according to FDA, 3-A, EC1935, GB4806	52014473[2)] (5 pieces)
	Alternative seals	
	Material: EPDM-70 Conform according to FDA, USP Class VI, 3-A, EC1935, GB4806 Approved by EHEDG	71140670[2)] (3 pieces)
	Material: FFKM Kalrez 6221 Conform according to FDA, USP Class VI, 3-A	71167883[1)]
	Material: FKM	71172153[1)] (5 pieces)
	Material: FKM-FEP coated Conform according to FDA, USP Class VI, 3-A, EC1935	71167747
	Material: Silicone VMQ 3-80 Conform according to FDA, USP Class VI, 3-A, EC1935, GB4806	71086100 (3 pieces)

1) TSP modification number. Can be ordered only FTSP, PTSP or NTSP.

2) Already included in the scope of delivery of the weld-in adapter: 1 x standard seal, 1 x EPDM seal (EHEDG).

G 1, d=53 without flange for pipe-mounting

Dimensions mm (in)	Version	Order number
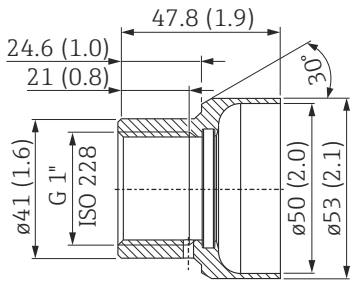 A0011927 Pressure and temperature range of the adapter ▪ max. 25 bar (362 psi) / max. 150 °C (302 °F) ▪ max. 40 bar (580 psi) / max. 100 °C (212 °F)	▪ Without inspection certificate ▪ With inspection certificate EN10204-3.1 material Material: AISI 316L (1.4435) Roughness (process side): Ra ≤ 0.8 µm (31.5 µin) Approved by CRN: 0F18434.5C	71258358 71093129
	Welding dummy for welding the weld-in adapter Material: Brass	71166879[1)]
	Blind plug for closing weld-in adapter ▪ Without inspection certificate ▪ With inspection certificate EN10204-3.1 material Material: AISI 316L (1.4435) Roughness (process side): Ra ≤ 0.76 µm (29.9 µin)	71580894 71167291[1)]
Seals, ø 28.17 x 3.53 mm (1.11 x 0.14 in)		**Order number**
 A0021901	**Standard seal**	
	Silicone O-ring Material: VMQ 70 Conform according to FDA, 3-A, EC1935, GB4806	52014472[2)] (5 pieces)
	Alternative seals	
	Material: EPDM-70 Conform according to FDA, USP Class VI, 3-A, EC1935 Approved by EHEDG	71140668[2)] (3 pieces)
	Material: FKM 75 Conform according to FDA, USP Class VI, EC1935	71182264[1)] (5 pieces)
	Material: FFKM Kalrez 4079	71166292[1)]
	Material: Silicone VMQ 3-80 Conform according to FDA, USP Class VI, 3-A, EC1935	71086102 (3 pieces)

1) TSP modification number. Can be ordered only FTSP, PTSP or NTSP.

2) Already included in the scope of delivery of the weld-in adapter: 1 x standard seal, 1 x EPDM seal (EHEDG).

G 1, d=60 with flange for flush-mounted installation with sealing surface

Dimensions mm (in)	Version	Order number
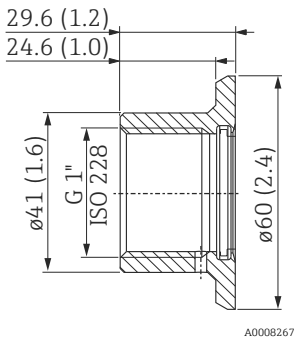 A0008267 Pressure and temperature range of the adapter ▪ max. 25 bar (362 psi) / max. 150 °C (302 °F) ▪ max. 40 bar (580 psi) / max. 100 °C (212 °F)	▪ Without inspection certificate ▪ With inspection certificate EN10204-3.1 material Material: AISI 316L (1.4435) Roughness (process side): Ra ≤ 0.8 µm (31.5 µin) Approved by CRN: 0F18434.5C	52001051 52011896
	Welding dummy for welding the weld-in adapter Material: Brass	71166879[1)]
	Blind plug for closing weld-in adapter ▪ Without inspection certificate ▪ With inspection certificate EN10204-3.1 material Material: AISI 316L (1.4435) Roughness (process side): Ra ≤ 0.76 µm (29.9 µin)	71580894 71167291[1)]
Seals, ø 28.17 x 3.53 mm (1.11 x 0.14 in)		**Order number**
 A0021901	**Standard seal**	
	Silicone O-ring Material: VMQ 70 Conform according to FDA, 3-A, EC1935, GB4806	52014472[2)] (5 pieces)
	Alternative seals	
	Material: EPDM-70 Conform according to FDA, USP Class VI, 3-A, EC1935 Approved by EHEDG	71140668[2)] (3 pieces)
	Material: FKM 75 Conform according to FDA, USP Class VI, EC1935	71182264[1)] (5 pieces)
	Material: FFKM Kalrez 4079	71166292[1)]
	Material: Silicone VMQ 3-80 Conform according to FDA, USP Class VI, 3-A, EC1935	71086102 (3 pieces)

1) TSP modification number. Can be ordered only FTSP, PTSP or NTSP.

2) Already included in the scope of delivery of the weld-in adapter: 1 x standard seal, 1 x EPDM seal (EHEDG).

G 1 sensor can be positioned

Dimensions mm (in)	Version	Order number
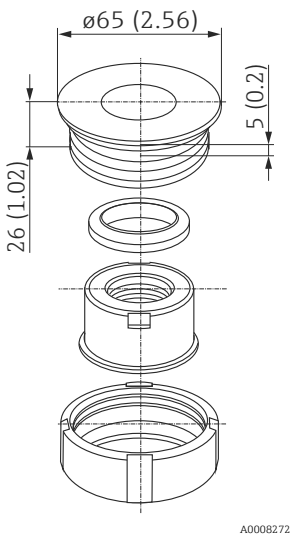 A0008272 Pressure and temperature range of the adapter ▪ max. 25 bar (362 psi) / max. 150 °C (302 °F) ▪ max. 40 bar (580 psi) / max. 100 °C (212 °F)	▪ Without inspection certificate ▪ With inspection certificate EN10204-3.1 material Material: AISI 316L (1.4435) Roughness (process side): Ra ≤ 0.8 µm (31.5 µin) Approved by CRN: 0F18434.5C	52001221 52011898
	Welding dummy for welding the weld-in adapter Material: Brass	71181945[1)]
	Blind plug for closing weld-in adapter Material: AISI 316L (1.4435) Roughness (process side): Ra ≤ 0.76 µm (29.9 µin)	71166366[1)]

Seals, ø 29 x 36 x 3.7 mm (1.14 x 1.42 x 0.15 in)		Order number
 A0021901	**Standard seal**	
	Silicone profile gasket Material: VMQ 60 Conform according to FDA, EC1935	52014424[2)] (5 pieces)
	Alternative seals	
	Material: EPDM-70	71168375[1)] (5 pieces)
	Material: VMQ 60 Conform according FDA, USP Class VI, 3-A, EC1935	71075662 (5 pieces)

1) TSP modification number. Can be ordered only FTSP, PTSP or NTSP.

2) Already included in the scope of delivery of the weld-in adapter: 1 x standard seal.

RD 52 sensor can be positioned

Dimensions mm (in)	Version	Order number
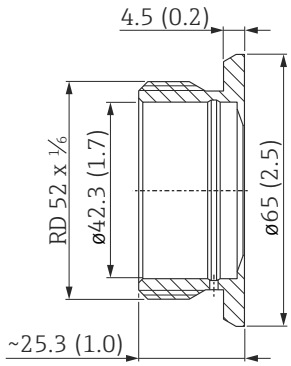 A0008271 Pressure and temperature range of the adapter ▪ max. 25 bar (362 psi) / max. 150 °C (302 °F) ▪ max. 40 bar (580 psi) / max. 100 °C (212 °F)	▪ Without inspection certificate ▪ With inspection certificate EN10204-3.1 material Material: AISI 316L (1.4435) Roughness (process side): Ra ≤ 0.8 µm (31.5 µin)	52001047 52006909
	Welding dummy for welding the weld-in adapter Material: Brass	71181945[1)]
	Blind plug for closing weld-in adapter Material: AISI 316L (1.4435) Roughness (process side): Ra ≤ 0.76 µm (29.9 µin)	71166366[1)]
Seals, ø 29 x 36 x 3.7 mm (1.14 x 1.42 x 0.15 in)		**Order number**
 A0021901	**Standard seal**	
	Silicone profile gasket Material: VMQ 60 Conform according to FDA, EC1935 For this version a simple replacement of the seal is possible.	52014424[2)] (5 pieces)
	Alternative seals	
	Material: EPDM-70	71168375[1)] (5 pieces)
	Material: VMQ 60 Conform according FDA, USP Class VI, 3-A, EC1935	71075662 (5 pieces)

1) TSP modification number. Can be ordered only FTSP, PTSP or NTSP.

2) Already included in the scope of delivery of the weld-in adapter: 1 x standard seal.

UNI D85

Dimensions mm (in)	Version	Order number
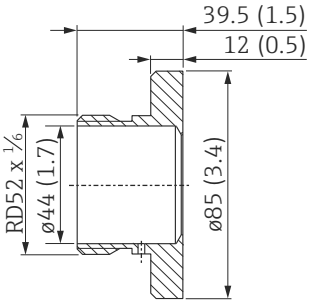 A0009985 Pressure and temperature range of the adapter ▪ max. 16 bar (232 psi) / max. 150 °C (302 °F)	▪ Without inspection certificate ▪ With inspection certificate EN10204-3.1 material Material: AISI 316L (1.4435) Roughness (process side): Ra ≤ 0.76 µm (29.9 µin) Approved by CRN: 0F18434.5C	52006262 52010173
	Welding dummy for welding the weld-in adapter Material: Brass	71114210
	Blind plug for closing weld-in adapter Material: AISI 316L (1.4435) Roughness (process side): Ra ≤ 0.76 µm (29.9 µin)	71580894
Seals, back ring		**Order number**
 A0021901	**Standard seal ø 34 x 41.5 x 6.4 mm (1.34 x 1.63 x 0.25 in)**	
	Silicone profile gasket Material: Silicone 60 Shore A Conform according to FDA, USP Class VI, 3-A, EC1935	52023572[1)] (5 pieces)
	Alternative seal ø 34 x 41.5 x 6.4 mm (1.34 x 1.63 x 0.25 in)	
	Profile gasket Material: EPDM-70 Conform according to FDA, USP Class VI, 3-A	71100719 (5 pieces)
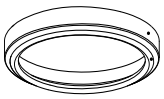 A0042001	**O-ring with back ring**	
	With inspection certificate EN10204-3.1 material Back ring: Dimensions: ø 38.2 x 43.6 x 5.6 mm (1.5 x 1.72 x 0.22 in) Material: AISI 316L (1.4404) O-ring: Dimensions: ø 36 x 2.5 mm (1.42 x 0.1 in) Material: EPDM-70 Shore A Conform according to FDA, USP, Class VI, 3-A Approved by EHEDG	71431380

1) Already included in the scope of delivery of the weld-in adapter: 1 x standard seal.

UNI D65

Dimensions mm (in)	Version	Order number
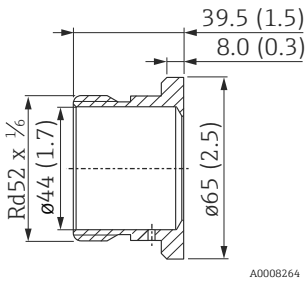 A0008264 Pressure and temperature range of the adapter ▪ max. 16 bar (232 psi) / max. 150 °C (302 °F)	▪ Without inspection certificate ▪ With inspection certificate EN10204-3.1 material Material: AISI 316L (1.4435) Roughness (process side): Ra ≤ 0.76 µm (29.9 µin) Approved by CRN: 0F18434.5C	214880-0002 52010174
	Welding dummy for welding the weld-in adapter Material: Brass	71114210
	Blind plug for closing weld-in adapter Material: AISI 316L (1.4435) Roughness (process side): Ra ≤ 0.76 µm (29.9 µin)	71580894
Seals, back ring		**Order number**
 A0021901	**Standard seal ø 34 x 41.5 x 6.4 mm (1.34 x 1.63 x 0.25 in)**	
	Silicone profile gasket Material: Silicone 60 Shore A Conform according to FDA, USP Class VI, 3-A, EC1935	52023572[1)] (5 pieces)
	Alternative seal ø 34 x 41.5 x 6.4 mm (1.34 x 1.63 x 0.25 in)	
	Profile gasket Material: EPDM-70 Conform according to FDA, USP Class VI, 3-A	71100719 (5 pieces)
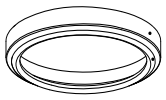 A0042001	**O-ring with back ring**	
	With inspection certificate EN10204-3.1 material Back ring: Dimensions: ø 38.2 x 43.6 x 5.6 mm (1.5 x 1.72 x 0.22 in) Material: AISI 316L (1.4404) O-ring: Dimensions: ø 36 x 2.5 mm (1.42 x 0.1 in) Material: EPDM-70 Shore A Conform according to FDA, USP, Class VI, 3-A Approved by EHEDG	71431380

1) Already included in the scope of delivery of the weld-in adapter: 1 x standard seal.

M24 D65

Dimensions (mm)	Version	Order number
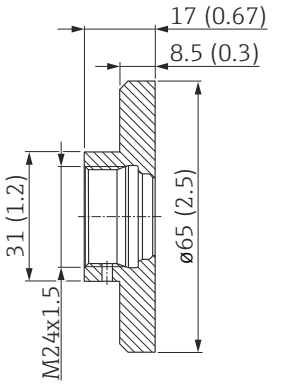 A0008551 Pressure and temperature range of the adapter ▪ max. 25 bar (362 psi) / max. 150 °C (302 °F)	▪ Without inspection certificate ▪ With inspection certificate EN10204-3.1 material Material: AISI 316L (1.4435) Roughness (process side): Ra ≤ 0.76 µm (29.9 µin) Approved by CRN: 0F18434.5C	71041381 71041383
	Blind plug for closing weld-in adapter Material: AISI 316L (1.4435) Roughness (process side): Ra ≤ 0.76 µm (29.9 µin)	71171418[1)]
Seal ø 15.54 x 2.62 mm (0.61 x 0.1 in)		**Order number**
	Standard seal	
 A0021901	O-ring Material: EPDM-70 Conform according FDA, USP Class VI, 3-A, EC1935, GB4806 Approved by EHEDG	52024267[2)] (5 pieces)

1) TSP modification number. Can be ordered only FTSP, PTSP or NTSP.

2) Already included in the scope of delivery of the weld-in adapter: 1 x standard seal.

DRD DN50 (65 mm (2.56 in)) for flush-mounted installation of devices with DRD-flange

Dimensions mm (in)	Version	Order number
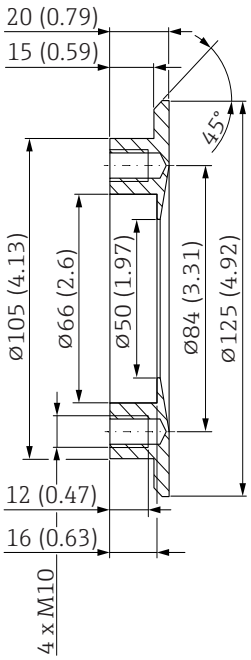 Pressure and temperature range of the adapter ▪ max. 25 bar (362 psi) / max. 150 °C (302 °F) ▪ max. 40 bar (580 psi) / max. 100 °C (212 °F)	▪ Without inspection certificate ▪ With inspection certificate EN10204-3.1 material Material: AISI 316L (1.4435) Roughness (process side): Ra ≤ 0.76 µm (29.9 µin)	52002041 52011899
	Material: AISI 304 (1.4301) Roughness (process side): Ra ≤ 0.8 µm (31.5 µin)	916743-0000
	Blind plug for closing weld-in adapter Material: AISI 316L (1.4435) Roughness (process side): Ra ≤ 0.76 µm (29.9 µin)	71181450[1)]
	Welding dummy for welding the weld-in adapter Material: Brass	71114209
Seal ø 50 x 65 x 1 mm (1.97 x 2.56 x 0.04 in)		**Order number**
	Standard seal	
	Flat seal Material: PTFE Conform according to FDA, EC1935	52024228[2)] (5 pieces)

1) TSP modification number. Can be ordered only FTSP, PTSP or NTSP.

2) Already included in the scope of delivery of the weld-in adapter: 1 x standard seal.

G 1¼ with thread adapter G 1

Dimensions mm (in)	Version	Order number
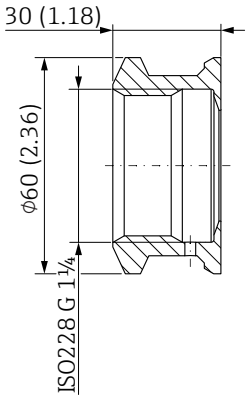 *Weld-in adapter G 1¼* 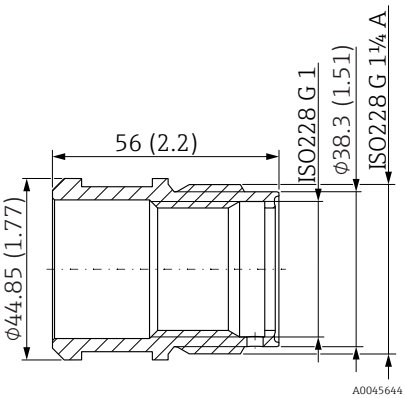 *Threaded sleeve* Pressure and temperature range ▪ max. 6 bar (87 psi) / -20 °C … +80 °C (-4 °F … +176 °F)	▪ Without inspection certificate ▪ With inspection certificate EN10204-3.1 material Material: AISI 316L (1.4435) Roughness (process side): Ra ≤ 0.76 µm (29.9 µin)	- 71444432
Seal, ø 29 x 36 x 3.7 mm (1.14 x 1.42 x 0.15 in)		**Order number**
	**Standard seal**	
	Silicone profile gasket Material: VMQ 60 Conform according to FDA, USP Class VI, 3-A, EC1935	71075662[1)] (5 pieces)
	Alternative seal	
	Silicone profile gasket Material: VMQ 60 Conform according to FDA, EC1935	52014424 (5 pieces)

1) Already included in the scope of delivery of the weld-in adapter: 1 x standard seal.

Weld-in adapter - overview Pressure

[Part 1] **Weld-in adapter - overview Pressure**	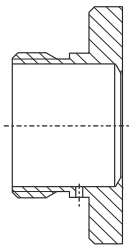 A0008245	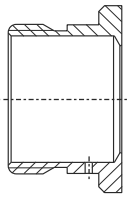 A0017639	 A0008254	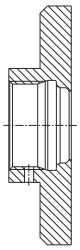 A0008552
	UNI D85	**UNI D65**	**DRD DN50 (65 mm) (weld-in flange)**	**M24 D65**
Material	316L (1.4435)	316L (1.4435)	316L (1.4435) 304 (1.4301)	316L (1.4435)
Roughness µm (µin) process side	≤ 0,76 (29.9)	≤ 0,76 (29.9)	≤ 0,76 (29.9)	≤ 0,76 (29.9)
Order number weld-in adapter	52006262	214880-0002	52002041/916743-0000	71041381
Order number weld-in adapter with inspection certificate[1)]	52010173	52010174	52011899/ –	71041383
Order number for seal replacement (5 pieces)[2)]	Silicone profile gasket 52023572	Silicone profile gasket 52023572	PTFE flat seal 52024228	EPDM O-ring 52024267
Order number Welding dummy	71114210	71114210	71114209	–
Order number blind plug[3)]	71181340	71181340	71181450	71171418

1) AD2000: The material 316L (in contact with process) corresponds to AD2000 – W0/W2/W10.

2) Already included in the scope of delivery of the weld-in adapter: 1 x standard seal.

3) TSP modification number. Can be ordered only FTSP, PTSP or NTSP.

[continue part 1] **Weld-in adapter - overview Pressure**	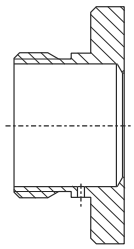 A0008245	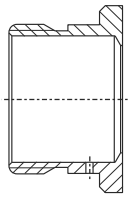 A0017639	 A0008254	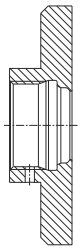 A0008552
	UNI D85	**UNI D65**	**DRD DN50 (65 mm) (weld-in flange)**	**M24 D65**
Measuring device **Cerabar**	**Suitable for process connection** option[1]			
PMP23	52J	52J	–	X2J/X3J
Ceraphant				
PTP33B	–	–	–	X2J/X3J
Cerabar M				
PMC51	UNJ/UPJ	UNJ/UPJ	TIJ	–
PMP51	–	–	TIJ	–
PMP55	UPJ	UPJ	TIJ	–
Deltapilot M				
FMB50	UNJ/UPJ	UNJ/UPJ	TIJ	–
Deltapilot S				
FMB70	00/01	00/01	TK	–
Deltabar S				
FMD78	00/UT	00/UT	TK	–
Deltabar				
FMD71	UNJ/UPJ	UNJ/UPJ	TIJ	–
FMD72	–	–	TIJ	–
Measuring device **Ceraphant**	**Adapter as an accessory enclosed** option[2]			
PTP33B	QP/QR	QL/QM	–	PM/PN
Cerabar				
PMP23	QP/QR	QL/QM	–	PM/PN
Cerabar M				
PMC51	Q2/Q3	QT/QU	QP/QR	–
PMP51	–	–	QP/QR	–
PMP55	–	–	QP/QR	–
Deltapilot M				
FMB50	Q2/Q3	QT/QU	QP/QR	–

1) The option can be selected in the Product Configurator via the order feature “Process Connection”.

2) The option can be selected in the Product Configurator via the order feature “Accessory Enclosed”.

[Part 2] **Weld-in adapter overview Pressure**	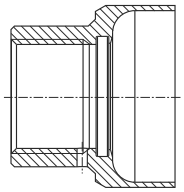 A0011924	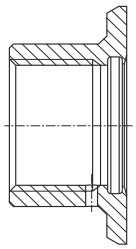 A0008248	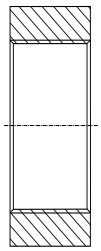 A0008247	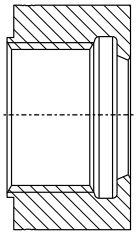 A0008249	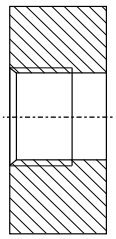 A0008250	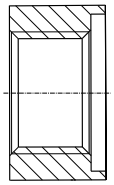 A0037352
	G 1, d=53 without flange	**G 1, d=60 with flange**	**G 1½ flush-mounted**	**G 1 flush-mounted (sealing taper)**	**G ½ flush-mounted**	**G ½ DIN3852**
Material	316L (1.4435)	316L (1.4435)	316L (1.4435)	316L (1.4404)	316L (1.4435)	316L (1.4404)
Roughness µm (µin) process side	≤ 0,8 (31.5)	≤ 0,8 (31.5)	≤ 0,8 (31.5)	≤ 0,8 (31.5)	≤ 0,8 (31.5)	≤ 0,8 (31.5)
Order number weld-in adapter	71258358	52001051	52024469	52005087	52002643	71389241
Order number weld-in adapter with inspection certificate[1)]	71093129	52011896	52024470	52010171	52010172	71389243
Order number for seal replacement (5 pieces)[2)]	Silicone O-ring 52014472	Silicone O-ring 52014472	–	–	–	–
Order number Welding dummy	71166879	71166879	52024471	52005272	52005082	52005082
Order number blind plug	71580894	71580894	–	71171731	–	–
Order number blind plug with inspection certificate[3)]	71167291	71167291	–	–	–	–

1) AD2000: The material 316L (in contact with process) corresponds to AD2000 – W0/W2/W10.

2) Already included in the scope of delivery of the weld-in adapter: 1 x standard seal, 1 x EPDM seal (EHEDG).

3) TSP modification number. Can be ordered only FTSP, PTSP or NTSP.

[continue part 2] weld-in adapter overview Pressure	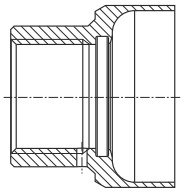 A0011924	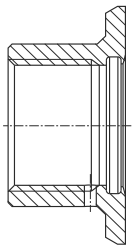 A0008248	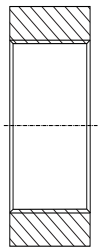 A0008247	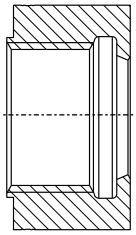 A0008249	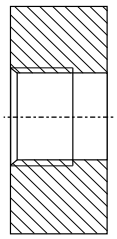 A0008250	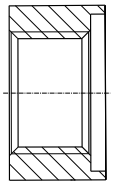 A0037352
	G 1, d=53 without flange	**G 1, d=60 with flange**	**G 1½ flush-mounted**	**G 1 flush-mounted (sealing taper)**	**G ½ flush-mounted**	**G ½ DIN3852**
Measuring device **Ceraphant**	**Suitable for process connection** option[1]					
PTP31	–	–	–	–	AG	–
PTP35	BB	BB	–	BA	–	–
PTP31B	–	–	–	–	WUJ	WJJ
PTP33B	WSJ	WSJ	–	WQJ	–	–
Cerabar						
PMP11	–	–	–	–	–	WJJ
PMP135	N	N	–	M	–	–
PMP21	–	–	–	–	WUJ	WJJ
PMP23	WSJ	WSJ	–	WQJ	–	–
PMP51B	–	–	WNJ	–	–	WJJ
PMP71B	–	–	WNJ	–	–	WJJ
PMC51B	–	–	WNJ	–	–	–
PMC71B	–	–	WNJ	–	–	–
Cerabar M						
PMC51	–	–	GVJ	–	–	–
PMP51	–	GZJ	GVJ	GXJ	G0J/GCJ	GRJ/GRC
PMP55	–	–	GVJ[2]	–	–	–
Cerabar S						
PMC71	–	–	1G/1H/1J	–	–	–
PMP71	–	–	1G/1H	–	–	1A/1B
PMP75	–	–	1G/1H	–	–	–
Deltapilot M						
FMB50	–	–	GGJ/GGC	–	–	–
FMB51	–	–	GGJ/GGC	–	–	–
FMB52	–	–	GGJ/GGC	–	–	–
Deltapilot S						
FMB70	–	–	1G/1H	–	–	–
Deltabar S						
FMD78	–	–	1G/1H	–	–	–
Deltabar						
FMD71	–	–	GVJ	–	–	–
FMD72	–	–	GVJ	–	–	–

1) The option can be selected in the Product Configurator via the order feature “Process Connection”.

2) Flush mounting is not possible with this combination.

[continue part 2] **weld-in adapter overview Pressure**	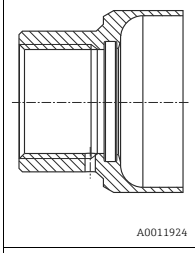 A0011924	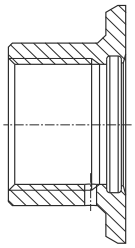 A0008248	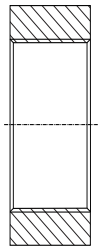 A0008247	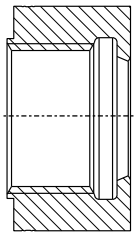 A0008249	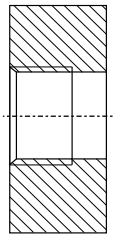 A0008250	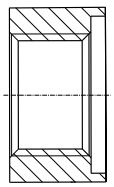 A0037352
	G 1, d=53 without flange	**G 1, d=60 with flange**	**G 1½ flush-mounted**	**G 1 flush-mounted (sealing taper)**	**G ½ flush-mounted**	**G ½ DIN3852**
Measuring device **Ceraphant**	**Adapter as an accessory enclosed** option[1]					
PTP31B	–	–	–	–	QA/QB	–
PTP33B	–	QJ/QK	–	QE/QF[2]	–	–
Cerabar						
PMP21	–	–	–	–	QA/QB	QM/QN
PMP23	-	QJ/QK	–	QE/QF[2]	–	–
PMC51	–	–	QJ/QK	–	–	–
PMP51	–	–	QJ/QK	QE/QF[2]	QA/QB	QM/QN
PMP55	–	–	QJ/QK[3]	–	–	–
PMP51B	–	–	QJ	–	–	–
PMP71B	–	–	QJ	–	–	–
PMC51B	–	–	QJ	–	–	–
PMC71B	–	–	QJ	–	–	–
Deltapilot M						
FMB50	–	–	QJ/QK	–	–	–
FMB51	–	–	QJ/QK	–	–	–
FMB52	–	–	QJ/QK	–	–	–

1) The option can be selected in the Product Configurator via the order feature “Accessory Enclosed”.

2) Only suitable for one-time screwing in (observe the following note "Untight connection")

3) Flush mounting is not possible with this combination.

NOTICE

Untight connection

Repeated screwing in of the process connection can cause damage to the weld-in adapter. The connection becomes untight.

- Use sealing G 1 flush-mounted only for one-time screwing in.

Weld-in adapter and accessories - Pressure

UNI D85

Dimensions mm (in)	Version	Order number
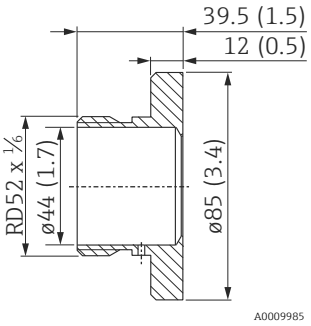 A0009985 Pressure and temperature range of the adapter ▪ max. 16 bar (232 psi) / max. 150 °C (302 °F)	▪ Without inspection certificate ▪ With inspection certificate EN10204-3.1 material Material: AISI 316L (1.4435) Roughness (process side): Ra ≤ 0.76 µm (29.9 µin) Approved by CRN: 0F18434.5C	52006262 52010173
	Welding dummy for welding the weld-in adapter Material: Brass	71114210
	Blind plug for closing weld-in adapter Material: AISI 316L (1.4435) Roughness (process side): Ra ≤ 0.76 µm (29.9 µin)	71580894
Seals, back ring		**Order number**
 A0021901	**Standard seal ø 34 x 41.5 x 6.4 mm (1.34 x 1.63 x 0.25 in)**	
	Silicone profile gasket Material: Silicone 60 Shore A Conform according to FDA, USP Class VI, 3-A, EC1935	52023572[1] (5 pieces)
	Alternative seal ø 34 x 41.5 x 6.4 mm (1.34 x 1.63 x 0.25 in)	
	Profile gasket Material: EPDM-70 Conform according to FDA, USP Class VI, 3-A	71100719 (5 pieces)
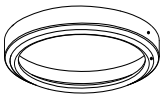 A0042001	**O-ring with back ring**	
	With inspection certificate EN10204-3.1 material Back ring: Dimensions: ø 38.2 x 43.6 x 5.6 mm (1.5 x 1.72 x 0.22 in) Material: AISI 316L (1.4404) O-ring: Dimensions: ø 36 x 2.5 mm (1.42 x 0.1 in) Material: EPDM-70 Shore A Conform according to FDA, USP, Class VI, 3-A Approved by EHEDG	71431380

1) Already included in the scope of delivery of the weld-in adapter: 1 x standard seal.

UNI D65

Dimensions mm (in)	Version	Order number
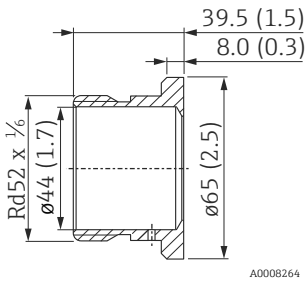 A0008264 Pressure and temperature range of the adapter ▪ max. 16 bar (232 psi) / max. 150 °C (302 °F)	▪ Without inspection certificate ▪ With inspection certificate EN10204-3.1 material Material: AISI 316L (1.4435) Roughness (process side): Ra ≤ 0.76 µm (29.9 µin) Approved by CRN: 0F18434.5C	214880-0002 52010174
	Welding dummy for welding the weld-in adapter Material: Brass	71114210
	Blind plug for closing weld-in adapter Material: AISI 316L (1.4435) Roughness (process side): Ra ≤ 0.76 µm (29.9 µin)	71580894
Seals, back ring		**Order number**
 A0021901	**Standard seal ø 34 x 41.5 x 6.4 mm (1.34 x 1.63 x 0.25 in)**	
	Silicone profile gasket Material: Silicone 60 Shore A Conform according to FDA, USP Class VI, 3-A, EC1935	52023572[1)] (5 pieces)
	Alternative seal ø 34 x 41.5 x 6.4 mm (1.34 x 1.63 x 0.25 in)	
	Profile gasket Material: EPDM-70 Conform according to FDA, USP Class VI, 3-A	71100719 (5 pieces)
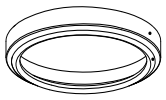 A0042001	**O-ring with back ring**	
	With inspection certificate EN10204-3.1 material Back ring: Dimensions: ø 38.2 x 43.6 x 5.6 mm (1.5 x 1.72 x 0.22 in) Material: AISI 316L (1.4404) O-ring: Dimensions: ø 36 x 2.5 mm (1.42 x 0.1 in) Material: EPDM-70 Shore A Conform according to FDA, USP, Class VI, 3-A Approved by EHEDG	71431380

1) Already included in the scope of delivery of the weld-in adapter: 1 x standard seal.

DRD DN50 (65 mm (2.56 in)) for flush-mounted installation of devices with DRD-Flange

Dimensions mm (in)	Version	Order number
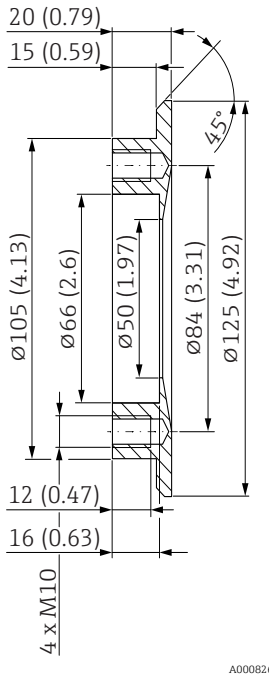 Pressure and temperature range of the adapter ▪ max. 25 bar (362 psi) / max. 150 °C (302 °F) ▪ max. 40 bar (580 psi) / max. 100 °C (212 °F)	▪ Without inspection certificate ▪ With inspection certificate EN10204-3.1 material Material: AISI 316L (1.4435) Roughness (process side): Ra ≤ 0.76 µm (29.9 µin)	52002041 52011899
	Material: AISI 304 (1.4301) Roughness (process side): Ra ≤ 0.8 µm (31.5 µin)	916743-0000
	Pressure welding dummy for welding the weld-in adapter Material: Brass	71114209
	Blind plug for closing weld-in adapter Material: AISI 316L (1.4435) Roughness (process side): Ra ≤ 0.76 µm (29.9 µin)	71181450[1]
Seal, ø 50 x 65 x 1 mm (1.97 x 2.56 x 0.04 in)		**Order number**
	**Standard seal**	
	Flat seal Material: PTFE Conform according to FDA, EC1935	52024228[2] (5 pieces)

1) TSP modification number. Can be ordered only FTSP, PTSP or NTSP.

2) Already included in the scope of delivery of the weld-in adapter: 1 x standard seal.

M24 D65

Dimensions (mm)	Version	Order number
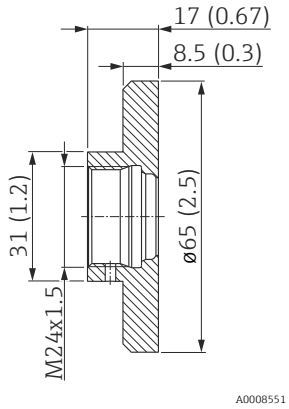 A0008551 Pressure and temperature range of the adapter ▪ max. 25 bar (362 psi) / max. 150 °C (302 °F)	▪ Without inspection certificate ▪ With inspection certificate EN10204-3.1 material Material: AISI 316L (1.4435) Roughness (process side): Ra ≤ 0.76 µm (29.9 µin) Approved by CRN: 0F18434.5C	71041381 71041383
	Blind plug for closing weld-in adapter Material: AISI 316L (1.4435) Roughness (process side): Ra ≤ 0.76 µm (29.9 µin)	71171418[1)]
Seal ø 15.54 x 2,62 mm (0.61 x 0.1 in)		**Order number**
 A0021901	**Standard seal**	
	O-Ring Material: EPDM-70 Conform according FDA, USP Class VI, 3-A, EC1935, GB4806 Approved by EHEDG	52024267[2)] (5 pieces)

1) TSP modification number. Can be ordered only FTSP, PTSP or NTSP.

2) Already included in the scope of delivery of the weld-in adapter: 1 x standard seal.

G 1, d=53 without flange for pipe-mounting

Dimensions mm (in)	Version	Order number
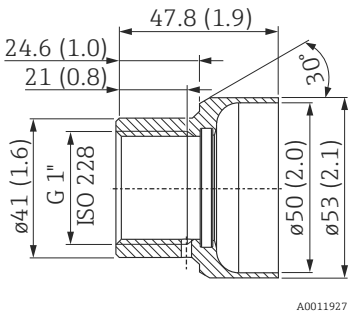 A0011927 Pressure and temperature range of the adapter ▪ max. 25 bar (362 psi) / max. 150 °C (302 °F) ▪ max. 40 bar (580 psi) / max. 100 °C (212 °F)	▪ Without inspection certificate ▪ With inspection certificate EN10204-3.1 material Material: AISI 316L (1.4435) Roughness (process side): Ra ≤ 0.8 µm (31.5 µin) Approved by CRN: 0F18434.5C	71258358 71093129
	Welding dummy for welding the weld-in adapter Material: Brass	71166879[1)]
	Blind plug for closing weld-in adapter ▪ Without inspection certificate ▪ With inspection certificate EN10204-3.1 material Material: AISI 316L (1.4435) Roughness (process side): Ra ≤ 0.76 µm (29.9 µin)	71580894 71167291[1)]
Seals, ø 28.17 x 3.53 mm (1.11 x 0.14 in)		**Order number**
 A0021901	**Standard seal**	
	Silicone O-ring Material: VMQ 70 Conform according to FDA, 3-A, EC1935, GB4806	52014472[2)] (5 pieces)
	Alternative seals	
	Material: EPDM-70 Conform according to FDA, USP Class VI, 3-A, EC1935 Approved by EHEDG	71140668[2)] (3 pieces)
	Material: FKM 75 Conform according to FDA, USP Class VI, EC1935	71182264[1)] (5 pieces)
	Material: FFKM Kalrez 4079	71166292[1)]
	Material: Silicone VMQ 3-80 Conform according to FDA, USP Class VI, 3-A, EC1935	71086102 (3 pieces)

1) TSP modification number. Can be ordered only FTSP, PTSP or NTSP.

2) Already included in the scope of delivery of the weld-in adapter: 1 x standard seal, 1 x EPDM seal (EHEDG).

G 1, d=60 with flange for flush-mounted installation with sealing surface

Dimensions mm (in)	Version	Order number
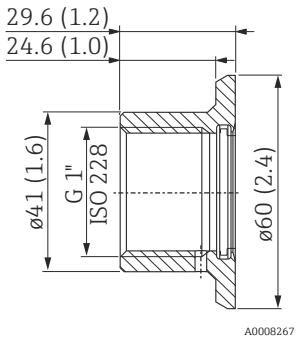 A0008267 Pressure and temperature range of the adapter ▪ max. 25 bar (362 psi) / max. 150 °C (302 °F) ▪ max. 40 bar (580 psi) / max. 100 °C (212 °F)	▪ Without inspection certificate ▪ With inspection certificate EN10204-3.1 material Material: AISI 316L (1.4435) Roughness (process side): Ra ≤ 0.8 µm (31.5 µin) Approved by CRN: 0F18434.5C	52001051 52011896
	Welding dummy for welding the weld-in adapter Material: Brass	71166879[1)]
	Blind plug for closing weld-in adapter ▪ Without inspection certificate ▪ With inspection certificate EN10204-3.1 material Material: AISI 316L (1.4435) Roughness (process side): Ra ≤ 0.76 µm (29.9 µin)	71580894 71167291[1)]
Seals, ø 28.17 x 3.53 mm (1.11 x 0.14 in)		**Order number**
 A0021901	**Standard seal**	
	Silicone O-ring Material: VMQ 70 Conform according to FDA, 3-A, EC1935, GB4806	52014472[2)] (5 pieces)
	Alternative seals	
	Material: EPDM-70 Conform according to FDA, USP Class VI, 3-A, EC1935 Approved by EHEDG	71140668[2)] (3 pieces)
	Material: FKM 75 Conform according to FDA, USP Class VI, EC1935	71182264[1)] (5 pieces)
	Material: FFKM Kalrez 4079	71166292[1)]
	Material: Silicone VMQ 3-80 Conform according to FDA, USP Class VI, 3-A, EC1935	71086102 (3 pieces)

1) TSP modification number. Can be ordered only FTSP, PTSP or NTSP.

2) Already included in the scope of delivery of the weld-in adapter: 1 x standard seal, 1 x EPDM seal (EHEDG).

G 1½ flush-mounted

Dimensions mm (in)	Version	Order number
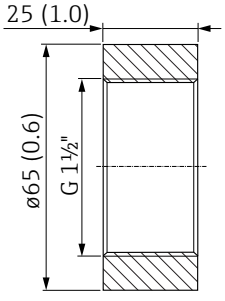 A0008266	▪ Without inspection certificate ▪ With inspection certificate EN10204-3.1 material Material: AISI 316L (1.4435) Roughness (process side): Ra ≤ 0.8 µm (31.5 µin)	52024469 52024470
	Pressure welding dummy for welding the weld-in adapter Material: Brass	52024471

G 1 flush-mounted with metallic sealing taper

Dimensions mm (in)	Version	Order number
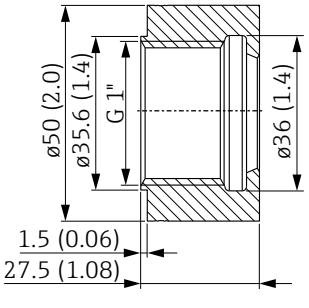 A0008268 **NOTICE** **Untight connection** Repeated screwing in of the process connection can cause damage to the weld-in adapter. The connection becomes untight. ▸ Use sealing G 1 flush with front only for one-time screwing in.	▪ Without inspection certificate ▪ With inspection certificate EN10204-3.1 material Material: AISI 316L (1.4404) Roughness (process side): Ra ≤ 0.8 µm (31.5 µin) Approved by CRN: 0F18434.5C	52005087 52010171
	Pressure welding dummy for welding the weld-in adapter Material: Brass	52005272
	Blind plug for closing weld-in adapter Material: AISI 316L (1.4435) Roughness (process side): Ra ≤ 0.76 µm (29.9 µin)	71171731[1)]

1) TSP modification number. Can be ordered only FTSP, PTSP or NTSP.

G ½ flush-mounted

Dimensions mm (in)	Version	Order number
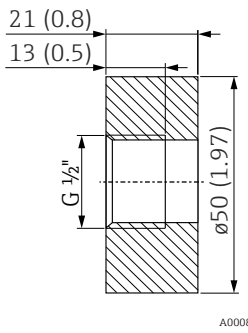 A0008269 Pressure resistance: max. 100 bar (1500 psi)	▪ Without inspection certificate ▪ With inspection certificate EN10204-3.1 material Material: AISI 316L (1.4435) Roughness (process side): Ra ≤ 0.8 µm (31.5 µin)	52002643 52010172
	Pressure welding dummy for welding the weld-in adapter Material: Brass	52005082

G ½ DIN3852

Dimensions mm (in)	Version	Order number
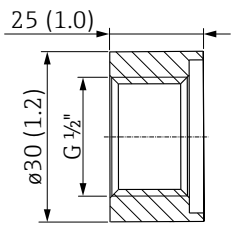 A0037351 Pressure resistance: max. 100 bar (1500 psi)	▪ Without inspection certificate ▪ With inspection certificate EN10204-3.1 material Material: AISI 316L (1.4404) Roughness (process side): Ra ≤ 0.8 µm (31.5 µin)	71389241 71389243
	Pressure welding dummy for welding the weld-in adapter Material: Brass	52005082

Weld-in adapter - overview Temperature

[Part 1] **Weld-in adapter - overview Temperature**	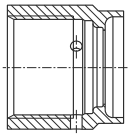 A0008246	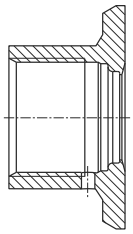 A0008251	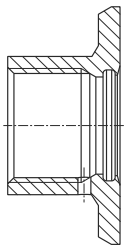 A0008256	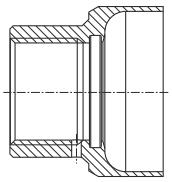 A0011924	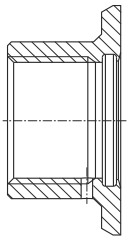 A0008248	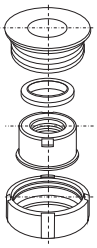 A0008253
	G ¾, d=29 for pipe-mounting	**G ¾, d=50 for vessel-mounting**	**G ¾, d=55 with flange**	**G 1, d=53 without flange**	**G 1, d=60 with flange**	**G 1 adjustable**
Material	316L (1.4435)	316L (1.4435)	316L (1.4435)	316L (1.4435)	316L (1.4435)	316L (1.4435)
Roughness µm (µin) process side	≤ 1,5 (59.1)	≤ 0,8 (31.5)	≤ 0,8 (31.5)	≤ 0,8 (31.5)	≤ 0,8 (31.5)	≤ 0,8 (31.5)
Order number weld-in adapter	71258357	71258355	52001052	71258358	52001051	52001221
Order number weld-in adapter with inspection certificate[1)]	52028295	52018765	52011897	71093129	52011896	52011898
Order number for seal replacement (5 pieces)	Silicone O-ring 52021717[2)]	Silicone O-ring 52021717[2)]	Silicone O-ring 52014473[2)]	Silicone O-ring 52014472[2)]	Silicone O-ring 52014472[2)]	Silicone profile gasket 52014424[3)]
Order number welding dummy	71174959	71174959	71168889	71166879	71166879	71181945
Order number blind plug	71167850	71167850	71177193	71580894	71580894	71166366
Order number blind plug with inspection certificate[1)]	–	–	71190074	71167291	71167291	71196853
Measuring device **Compact thermometer**	**Suitable for process connection** option[4)]					
TMR35	AC	AC	AB	AD	AD	AD
TM311	J1	J1	J2	J3	J3	J3
Hygienic thermometer						
TM371	J1	J1	J2	J3	J3	J3
TM372	J1	J1	J2	J3	J3	J3
TM411	J1	J1	J2	J3	J3	J3
Thermowell						
TT411	J1	J1	J2	J3	J3	J3

1) Inspection certificate EN10204-3.1 material; AD2000: The material 316L (in contact with process) corresponds to AD2000 – W0/W2/W10.

2) Already included in the scope of delivery of the weld-in adapter: 1 x standard seal, 1 x EPDM seal (EHEDG).

3) Already included in the scope of delivery of the weld-in adapter: 1 x standard seal.

4) The option can be selected in the Product Configurator via the corresponding order feature.

[Part 2] **Weld-in adapter - overview Temperature**	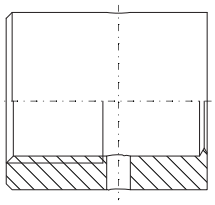 A0045815	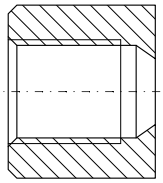 A0045834	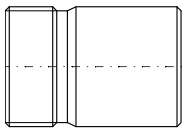 A0045836
	Welding boss with sealing taper for G ½	**Welding boss with sealing taper for M12x1.5**	**G 1¼ for Ingold process connection**
Material	316L (1.4435)	316L (1.4435)	316L (1.4435)
Order number weld-in adapter	71424800	71405560	71531585
Order number for seal replacement (5 pieces)[1]	–	–	Silicone o-ring 60018911
Order number blind plug	60022519	60021194	–
Measuring device **Compact thermometer**	**Suitable for process connection** option[2]		
TMR31	–	–	–
TMR35	MB	–	–
TM311	H2	H1	–
Hygienic thermometer			
TM371	H2	H1	M1/M3
TM372	–	–	–
TM401	H2	H1	–
TM411	H2	H1	M1/M3
Thermowell			
TT411	H2	H1	M1/M3
Temperature switch			
TTR31	–	–	–
TTR35	MB	–	–
Flow switch			
DTT31	–	–	–
DTT35	MB	–	–

1) Already included in the scope of delivery of the weld-in adapter: 1 x standard seal.

2) The option can be selected in the Product Configurator via the corresponding order feature.

Weld-in adapter and accessories - Temperature

G ¾, d=29 for pipe-mounting

Dimensions mm (in)	Version	Order number
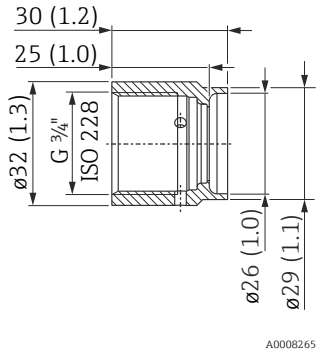 A0008265 Pressure and temperature range of the adapter ▪ max. 25 bar (362 psi) / max. 150 °C (302 °F) ▪ max. 40 bar (580 psi) / max. 100 °C (212 °F)	▪ Without inspection certificate ▪ With inspection certificate EN10204-3.1 material Material: AISI 316L (1.4435) Roughness (process side): Ra ≤ 1.5 µm (59.1 µin) Approved by CRN: 0F18434.5C	71258357 52028295
	Welding dummy for welding the weld-in adapter Material: Brass	71174959[1)]
	Blind plug for closing weld-in adapter Material: AISI 316L (1.4435) Roughness (process side): Ra ≤ 3.2 µm (126 µin)	71167850[1)]
Seals and pressure ring		**Order number**
 A0021901	**Standard seal**	
	Silicone O-ring, ø 14.9 x 2.7 mm (0.59 x 0.11 in) Material: VMQ 70 Conform according to FDA, 3-A For this version a simple replacement of the seal is possible.	52021717[2)] (5 pieces)
	Alternative seals	
	ø 15.08 x 2.62 mm (0.59 x 0.10 in) Material: EPDM Conform according to FDA, USP Class VI, EC1935, 3-A Approved by EHEDG	71529759[2)] (5 pieces)
	ø 15.08 x 2.62 mm (0.59 x 0.10 in) Material: FKM Conform according to FDA, USP Class VI, EC1935, 3-A Approved by EHEDG	71167890[1)] (5 pieces)
	ø14.9 x 2.7 mm (0.59 x 0.11 in) Material: Silicone VMQ 80 Conform according to FDA, USP Class VI, 3-A	71086117 (3 pieces)
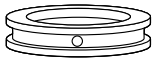 A0021902	**Pressure ring** Material: 316L (1.4435) ▪ The seal with pressure ring enables easy exchange of defective sealing rings.	52027421

1) TSP modification number. Can be ordered only FTSP, PTSP or NTSP.

2) Already included in the scope of delivery of the weld-in adapter: 1 x standard seal, 1 x EPDM seal (EHEDG).

G ¾, d=50 for vessel-mounting

Dimensions mm (in)	Version	Order number
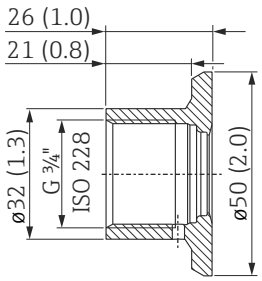 A0008810 Pressure and temperature range of the adapter of the adapter ▪ max. 25 bar (362 psi) / max. 150 °C (302 °F) ▪ max. 40 bar (580 psi) / max. 100 °C (212 °F)	▪ Without inspection certificate ▪ With inspection certificate EN10204-3.1 material Material: AISI 316L (1.4435) Roughness (process side): Ra ≤ 0.8 µm (31.5 µin) Approved by CRN: 0F18434.5C	71258355 52018765
	Welding dummy for welding the weld-in adapter Material: Brass	71174959[1)]
	Blind plug for closing weld-in adapter Material: AISI 316L (1.4435) Roughness (process side): Ra ≤ 3.2 µm (126 µin)	71167850[1)]
Seals and pressure ring		**Order number**
 A0021901	**Standard seal**	
	Silicone O-ring, ø 14.9 x 2.7 mm (0.59 x 0.11 in) Material: VMQ 70 Conform according to FDA, 3-A For this version a simple replacement of the seal is possible.	52021717[2)] (5 pieces)
	Alternative seals	
	ø 15.08 x 2.62 mm (0.59 x 0.10 in) Material: EPDM Conform according to FDA, USP Class VI, EC1935, 3-A Approved by EHEDG	71529759[2)] (5 pieces)
	ø 15.08 x 2.62 mm (0.59 x 0.10 in) Material: FKM Conform according to FDA, USP Class VI, EC1935, 3-A Approved by EHEDG	71167890[1)] (5 pieces)
	ø 14.9 x 2.7 mm (0.59 x 0.11 in) Material: Silicone VMQ 80 Conform according to FDA, USP Class VI, 3-A	71086117 (3 pieces)
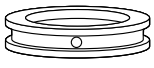 A0021902	**Pressure ring** Material: 316L (1.4435) The seal with pressure ring enables easy exchange of defective sealing rings.	52027421

1) TSP modification number. Can be ordered only FTSP, PTSP or NTSP.

2) Already included in the scope of delivery of the weld-in adapter: 1 x standard seal, 1 x EPDM seal (EHEDG).

G ¾, d=55 with flange for flush-mounted installation

Dimensions mm (in)	Version	Order number
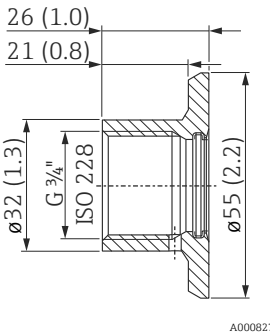 A0008274 Pressure and temperature range of the adapter ▪ max. 25 bar (362 psi) / max. 150 °C (302 °F) ▪ max. 40 bar (580 psi) / max. 100 °C (212 °F)	▪ Without inspection certificate ▪ With inspection certificate EN10204-3.1 material Material: AISI 316L (1.4435) Roughness (process side): Ra ≤ 0.8 µm (31.5 µin)	52001052 52011897
	Welding dummy for welding the weld-in adapter Material: Brass	71168889[1)]
	Blind plug for closing weld-in adapter ▪ Without inspection certificate ▪ With inspection certificate EN10204-3.1 material Material: AISI 316L (1.4435) Roughness (process side): Ra ≤ 0.76 µm (29.9 µin)	71177193[1)] 71190074[1)]
Seals, ø 21.89 x 2.62 mm (0.86 x 0.10 in)		**Order number**
 A0021901	**Standard seal**	
	Silicone O-ring Material: VMQ 70 Conform according to FDA, 3-A, EC1935, GB4806	52014473[2)] (5 pieces)
	Alternative seals	
	Material: EPDM-70 Conform according to FDA, USP Class VI, 3-A, EC1935, GB4806 Approved by EHEDG	71140670[2)] (3 pieces)
	Material: FFKM Kalrez 6221 Conform according to FDA, USP Class VI, 3-A	71167883[1)]
	Material: FKM	71172153[1)] (5 pieces)
	Material: FKM-FEP coated Conform according to FDA, USP Class VI, 3-A, EC1935	71167747
	Material: Silicone VMQ 3-80 Conform according to FDA, USP Class VI, 3-A, EC1935, GB4806	71086100 (3 pieces)

1) TSP modification number. Can be ordered only FTSP, PTSP or NTSP.

2) Already included in the scope of delivery of the weld-in adapter: 1 x standard seal, 1 x EPDM seal (EHEDG).

G 1, d=53 without flange for pipe-mounting

Dimensions mm (in)	Version	Order number
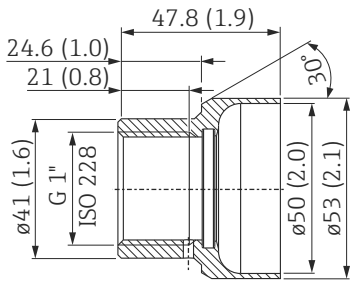 A0011927 Pressure and temperature range of the adapter ▪ max. 25 bar (362 psi) / max. 150 °C (302 °F) ▪ max. 40 bar (580 psi) / max. 100 °C (212 °F)	▪ Without inspection certificate ▪ With inspection certificate EN10204-3.1 material Material: AISI 316L (1.4435) Roughness (process side): Ra ≤ 0.8 µm (31.5 µin) Approved by CRN: 0F18434.5C	71258358 71093129
	Welding dummy for welding the weld-in adapter Material: Brass	71166879[1)]
	Blind plug for closing weld-in adapter ▪ Without inspection certificate ▪ With inspection certificate EN10204-3.1 material Material: AISI 316L (1.4435) Roughness (process side): Ra ≤ 0.76 µm (29.9 µin)	71580894 71167291[1)]
Seals, ø 28.17 x 3.53 mm (1.11 x 0.14 in)		**Order number**
 A0021901	**Standard seal**	
	Silicone O-ring Material: VMQ 70 Conform according to FDA, 3-A, EC1935, GB4806	52014472[2)] (5 pieces)
	Alternative seals	
	Material: EPDM-70 Conform according to FDA, USP Class VI, 3-A, EC1935 Approved by EHEDG	71140668[2)] (3 pieces)
	Material: FKM 75 Conform according to FDA, USP Class VI, EC1935	71182264[1)] (5 pieces)
	Material: FFKM Kalrez 4079	71166292[1)]
	Material: Silicone VMQ 3-80 Conform according to FDA, USP Class VI, 3-A, EC1935	71086102 (3 pieces)

1) TSP modification number. Can be ordered only FTSP, PTSP or NTSP.

2) Already included in the scope of delivery of the weld-in adapter: 1 x standard seal, 1 x EPDM seal (EHEDG).

G 1, d=60 with flange for flush-mounted installation with sealing surface

Dimensions mm (in)	Version	Order number
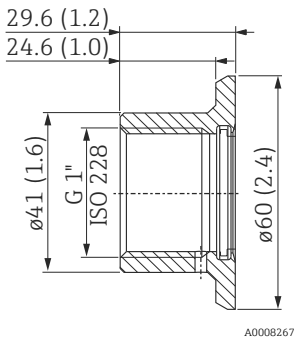 A0008267 Pressure and temperature range of the adapter ▪ max. 25 bar (362 psi) / max. 150 °C (302 °F) ▪ max. 40 bar (580 psi) / max. 100 °C (212 °F)	▪ Without inspection certificate ▪ With inspection certificate EN10204-3.1 material Material: AISI 316L (1.4435) Roughness (process side): Ra ≤ 0.8 µm (31.5 µin) Approved by CRN: 0F18434.5C	52001051 52011896
	Welding dummy for welding the weld-in adapter Material: Brass	71166879[1)]
	Blind plug for closing weld-in adapter ▪ Without inspection certificate ▪ With inspection certificate EN10204-3.1 material Material: AISI 316L (1.4435) Roughness (process side): Ra ≤ 0.76 µm (29.9 µin)	71580894 71167291[1)]
Seals, ø 28.17 x 3.53 mm (1.11 x 0.14 in)		**Order number**
 A0021901	**Standard seal**	
	Silicone O-ring Material: VMQ 70 Conform according to FDA, 3-A, EC1935, GB4806	52014472[2)] (5 pieces)
	Alternative seals	
	Material: EPDM-70 Conform according to FDA, USP Class VI, 3-A, EC1935 Approved by EHEDG	71140668[2)] (3 pieces)
	Material: FKM 75 Conform according to FDA, USP Class VI, EC1935	71182264[1)] (5 pieces)
	Material: FFKM Kalrez 4079	71166292[1)]
	Material: Silicone VMQ 3-80 Conform according to FDA, USP Class VI, 3-A, EC1935	71086102 (3 pieces)

1) TSP modification number. Can be ordered only FTSP, PTSP or NTSP.

2) Already included in the scope of delivery of the weld-in adapter: 1 x standard seal, 1 x EPDM seal (EHEDG).

G 1 sensor can be positioned

Dimensions mm (in)	Version	Order number
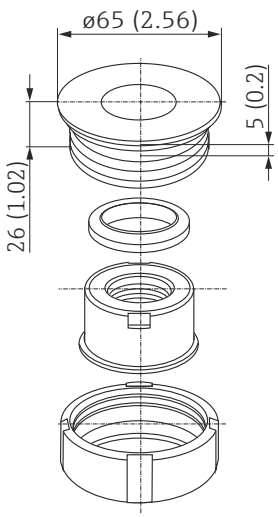 A0008272 Pressure and temperature range of the adapter ▪ max. 25 bar (362 psi) / max. 150 °C (302 °F) ▪ max. 40 bar (580 psi) / max. 100 °C (212 °F)	▪ Without inspection certificate ▪ With inspection certificate EN10204-3.1 material Material: AISI 316L (1.4435) Roughness (process side): Ra ≤ 0.8 µm (31.5 µin) Approved by CRN: 0F18434.5C	52001221 52011898
	Welding dummy for welding the weld-in adapter Material: Brass	71181945[1)]
	Blind plug for closing weld-in adapter Material: AISI 316L (1.4435) Roughness (process side): Ra ≤ 0.76 µm (29.9 µin)	71166366[1)]

Seals, ø 29 x 36 x 3.7 mm (1.14 x 1.42 x 0.15 in)		Order number
 A0021901	**Standard seal**	
	Silicone profile gasket Material: VMQ 60 Conform according to FDA, EC1935	52014424[2)] (5 pieces)
	Alternative seals	
	Material: EPDM-70	71168375[1)] (5 pieces)
	Material: VMQ 60 Conform according FDA, USP Class VI, 3-A, EC1935	71075662 (5 pieces)

1) TSP modification number. Can be ordered only FTSP, PTSP or NTSP.

2) Already included in the scope of delivery of the weld-in adapter: 1 x standard seal.

Welding boss with sealing taper for thread G ½ or M12x1.5

Dimensions in mm (in)	Version	Order number
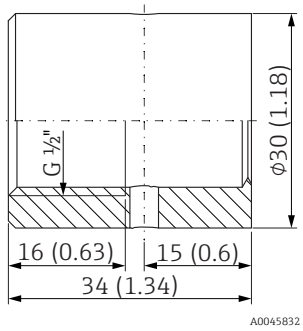 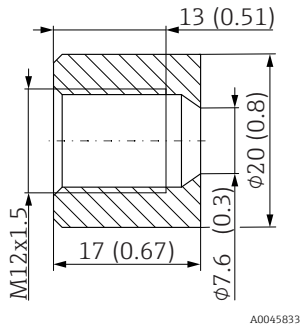 Process pressure ▪ max. 16 bar (232 psi)	Welding boss for thread G ½- or M12x1.5 Metal-sealing; conical Material of wetted parts AISI 316L (1.4435)	71424800 (G ½) 71405560 (M12x1.5)
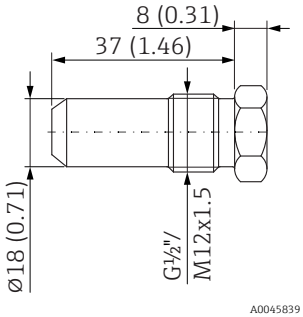	Dummy plug for G ½ or M12x1.5 conical metal-sealing welding boss Material: AISI 316L (1.4435)	60022519 (G ½) In preparation (M12x1.5)

Weld-in adapter for Ingold process connection

Dimensions in mm (in)	Version	Order number
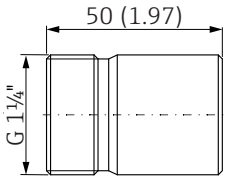	G 1¼ x 50 mm (1.97 in) Material of wetted parts: AISI 316L (1.4435)	71531585
Seal		**Order number**
	**O-ring sealing kit**	
	Silicone O-ring In accordance with FDA Maximum temperature: 230 °C (446 °F)	60018911

Welding boss with sealing taper with/without pressure screw

Dimensions in mm (in)	Version	Bestellnummer
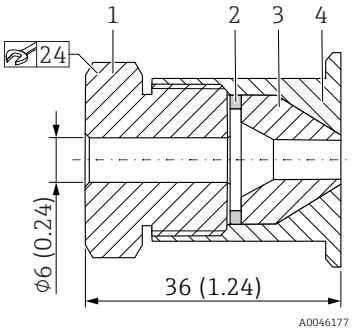 *1 Pressure screw, 303/304* *2 Washer, 303/304* *3 Sealing taper, PEEK* *4 Collar welding boss, 316L* Process pressure ▪ max. 10 bar (145 psi)	Collar welding boss movable with sealing taper, washer and pressure screw G ½ Material of parts in contact with the process AISI 316L, PEEK	In preparation (with pressure screw)
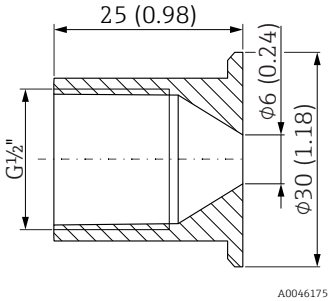 Process pressure ▪ max. 10 bar (145 psi)	Collar welding boss Material of parts in contact with the process AISI 316L	51004752 (without pressure screw)

Hygiene process adapter Nivector FTI26

Pay attention to the temperature and pressure specifications for the seals and clips used at the customer site!

Process adapter G 1¼ Tri-Clamp 2" with threaded sleeve

Dimensions in mm (in)	Version	Order number
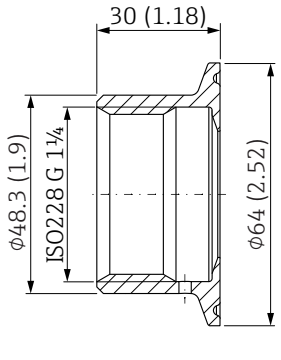 *Process adapter G 1¼*	▪ Without inspection certificate ▪ With inspection certificate EN10204-3.1 material Material: AISI 316L (1.4404) Roughness (process side): Ra ≤ 0.76 µm (29.9 µin)	– 71444431
	▪ Measuring device: Nivector FTI26 ▪ Suitable for Process connection[1)] Option: WDJ ▪ Adapter as an accessory enclosed[1] Option: RK	
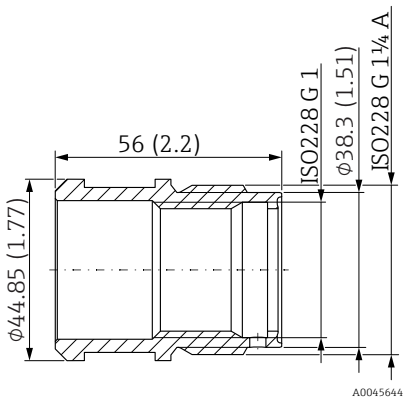 *Threaded sleeve* Pressure and temperature range ▪ max. 6 bar (87 psi) / -20 °C … +80 °C (-4 °F … +176 °F)		

Seal, ø 29 x 36 x 3.7 mm (1.14 x 1.42 x 0.15 in)		Order number
	**Standard seal**	
	Silicone profile gasket Material: VMQ 60 Conform according to FDA, USP Class VI, 3-A, EC1935 Approved by EHEDG	71075662[2)] (5 pieces)
	Alternative seal	
	Silicone profile gasket Material: VMQ 60 Conform according to FDA, EC1935 Approved by EHEDG	52014424 (5 pieces)

1) The option can be selected in the Product Configurator via the corresponding order feature.

2) Already included in the scope of delivery of the weld-in adapter: 1 x standard seal.

Process adapter M24 - overview Level and Pressure

Process adapter M24	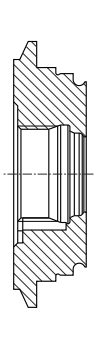 A0023286	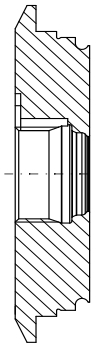 A0023419	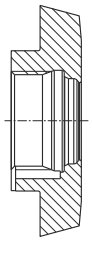 A0023547	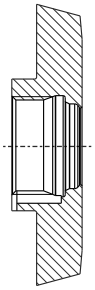 A0023418	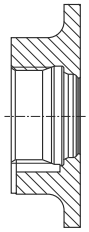 A0023420	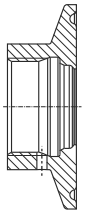 A0023423	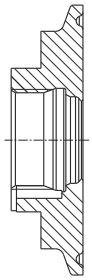 A0023426	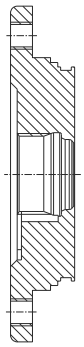 A0023422
	Varivent F DN32 PN40	**Varivent N DN50 PN40**	**DIN11851 DN40**	**DIN11851 DN50**	**SMS 1½**	**Clamp 1½**	**Clamp 2**	**APV-Inline**
Material	316L (1.4435)	316L (1.4435)	316L (1.4435)	316L (1.4435)	316L (1.4435)	316L (1.4435)	316L (1.4435)	316L (1.4435)
Roughness µm (µin) process side	≤ 0.76 (29.9)	≤ 0.76 (29.9)	≤ 0.76 (29.9)	≤ 0.76 (29.9)	≤ 0.76 (29.9)	≤ 0.76 (29.9)	≤ 0.76 (29.9)	≤ 0.76 (29.9)
Order number process adapter	52023996	52023997	52023999	52023998	52026997	52023994	52023995	52024000
Order number process adapter with inspection certificate[1)]	52024003	52024004	52024006	52024005	52026999	52024001	52024002	52024007
Order number for seal replacement (5 pieces)[2)]	EPDM 52024267	EPDM 52024267	EPDM 52024267	EPDM 52024267	EPDM 52024267	EPDM 52024267	EPDM 52024267	EPDM 52024267
Slottet nut	–	–	71258361	71258361	–	–	–	–
Measuring device / **Liquipoint**	**Suitable for process connection** option[3)]							
FTW23, FTW33	X2J	X2J	X2J	X2J	X2J	X2J	X2J	X2J
Liquitrend								
QMW43	X2J	X2J	X2J	X2J	X2J	X2J	X2J	X2J
Liquiphant								
FTL33	X2J	X2J	X2J	X2J	X2J	X2J	X2J	X2J
Ceraphant								
PTP33B	X2J/X3J	X2J/X3J	X2J/X3J	X2J/X3J	X2J/X3J	X2J/X3J	X2J/X3J	X2J/X3J
Cerabar								
PMP23	X2J/X3J	X2J/X3J	X2J/X3J	X2J/X3J	X2J/X3J	X2J/X3J	X2J/X3J	X2J/X3J
Micropilot								
FMR62	U2J	U2J	U2J	U2J	U2J	U2J	U2J	U2J
FMR63B	X2J	X2J	X2J	X2J	X2J	X2J	–	–
Liquipoint	**Adapter as an accessory enclosed** option [4)]							
FTW23	RC/RD	RA/RB	–	RE/RF	RG/RH	RI/RJ	RK/RL	–
FTW33	RC/RD	RA/RB	–	RE/RF	RG/RH	–	–	–
Liquiphant								
FTL33	RC/RD	RA/RB	–	RE/RF	RG/RH	–	–	–
Micropilot								
FMR62, FMR63B	RC/RD	RA/RB	RE/RF	RG/RH	RI/RJ	RK/RL	–	–

1) Inspection certificate EN10204-3.1 material; AD2000: The material 316L (in contact with process) corresponds to AD2000 – W0/W2/W10.

2) Already included in the scope of delivery of the weld-in adapter: 1 x standard seal.

3) The option can be selected in the Product Configurator via the order feature "Process Connection".

4) The option can be selected in the Product Configurator via the order feature "Accessory Enclosed".

Process connection M24 - Level and Pressure

Pay attention to the temperature and pressure specifications for the seals and clips used at the customer site!

Varivent F DN32 PN40

Dimensions mm (in)	Version	Order number
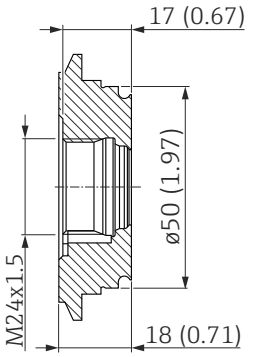 Pressure and temperature range of the adapter ▪ max. 25 bar (362 psi) / max. 150 °C (302 °F) ▪ max. 40 bar (580 psi) / max. 100 °C (212 °F)	▪ Without inspection certificate ▪ With inspection certificate EN10204-3.1 material Material: AISI 316L (1.4435) Roughness (process side): Ra ≤ 0.76 µm (29.9 µin) Approved by CRN: 0F18434.5C	52023996 52024003
Seal ø 15.54 x 2.62 mm (0.61 x 0.1 in)		**Order number**
	Standard seal	
	O-ring Material: EPDM-70 Conform according FDA, USP Class VI, 3-A, EC1935, GB4806 Approved by EHEDG	52024267[1] (5 pieces)

1) Already included in the scope of delivery of the weld-in adapter: 1 x standard seal.

Varivent N DN50 PN40

Dimensions mm (in)	Version	Order number
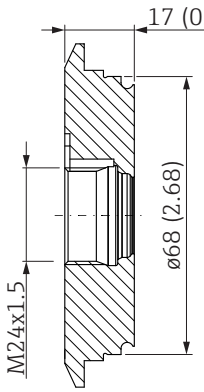 A0023276 Pressure and temperature range of the adapter ▪ max. 25 bar (362 psi) / max. 150 °C (302 °F) ▪ max. 40 bar (580 psi) / max. 100 °C (212 °F)	▪ Without inspection certificate ▪ With inspection certificate EN10204-3.1 material Material: AISI 316L (1.4435) Roughness (process side): Ra ≤ 0.76 µm (29.9 µin) Approved by CRN: 0F18434.5C	52023997 52024004
Seal ø 15.54 x 2.62 mm (0.61 x 0.1 in)		**Order number**
	Standard seal	
 A0021901	O-ring Material: EPDM-70 Conform according FDA, USP Class VI, 3-A, EC1935, GB4806 Approved by EHEDG	52024267[1)] (5 pieces)

1) Already included in the scope of delivery of the weld-in adapter: 1 x standard seal.

DIN11851 DN40

Dimensions mm (in)	Version	Order number
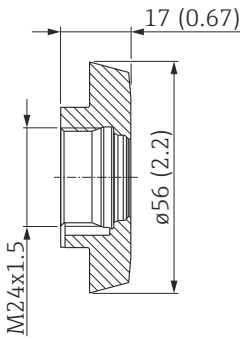 A0023548 Pressure and temperature range of the adapter ▪ max. 25 bar (362 psi) / max. 150 °C (302 °F)	▪ Without inspection certificate ▪ With inspection certificate EN10204-3.1 material Material: AISI 316L (1.4435) Roughness (process side): Ra ≤ 0.76 µm (29.9 µin) Approved by CRN: 0F18434.5C	52023999 52024006
Seal ø 15.54 x 2.62 mm (0.61 x 0.1 in)		**Order number**
	Standard seal	
 A0021901	O-ring Material: EPDM-70 Conform according FDA, USP Class VI, 3-A, EC1935, GB4806 Approved by EHEDG	52024267[1)] (5 pieces)

1) Already included in the scope of delivery of the weld-in adapter: 1 x standard seal.

DIN11851 DN50

Dimensions in mm (in)	Version	Order number
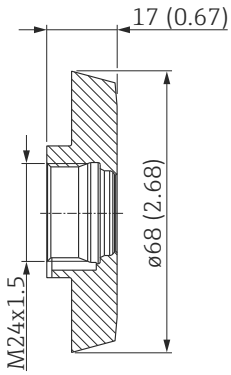 A0023273 Pressure and temperature range of the adapter ▪ max. 25 bar (362 psi) / max. 150 °C (302 °F)	▪ Without inspection certificate ▪ With inspection certificate EN10204-3.1 material Material: AISI 316L (1.4435) Roughness (process side): Ra ≤ 0.76 µm (29.9 µin) Approved by CRN: 0F18434.5C	52023998 52024005
Seal ø 15.54 x 2.62 mm (0.61 x 0.1 in)		**Order number**
 A0021901	**Standard seal**	
	O-Ring Material: EPDM-70 Conform according FDA, USP Class VI, 3-A, EC1935, GB4806 Approved by EHEDG	52024267[1)] (5 pieces)

1) Already included in the scope of delivery of the weld-in adapter: 1 x standard seal.

SMS 1½

Dimensions mm (in)	Version	Order number
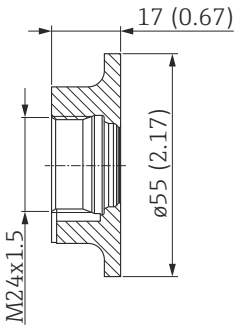 A0023278 Pressure and temperature range of the adapter ▪ max. 25 bar (362 psi) / max. 150 °C (302 °F)	▪ Without inspection certificate ▪ With inspection certificate EN10204-3.1 material Material: AISI 316L (1.4435) Roughness (process side): Ra ≤ 0.76 µm (29.9 µin) Approved by CRN: 0F18434.5C	52026997 52026999
Seal ø 15.54 x 2.62 mm (0.61 x 0.1 in)		**Order number**
 A0021901	**Standard seal**	
	O-ring Material: EPDM-70 Conform according FDA, USP Class VI, 3-A, EC1935, GB4806 Approved by EHEDG	52024267[1)] (5 pieces)

1) Already included in the scope of delivery of the weld-in adapter: 1 x standard seal.

Clamp 1½ (DIN32676, ISO28552)

Dimensions mm (in)	Version	Order number
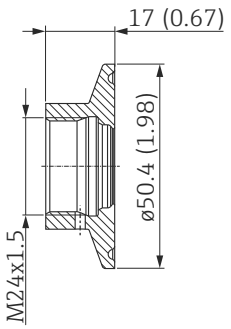 A0023284 Pressure and temperature range of the adapter ▪ max. 25 bar (362 psi) / max. 150 °C (302 °F) ▪ max. 40 bar (580 psi) / max. 100 °C (212 °F)	▪ Without inspection certificate ▪ With inspection certificate EN10204-3.1 material Material: AISI 316L (1.4435) Roughness (process side): Ra ≤ 0.76 µm (29.9 µin) Approved by CRN: 0F18434.5C	52023994 52024001
Seal ø 15.54 x 2.62 mm (0.61 x 0.1 in)		**Order number**
 A0021901	**Standard seal**	
	O-Ring Material: EPDM-70 Conform according FDA, USP Class VI, 3-A, EC1935, GB4806 Approved by EHEDG	52024267[1)] (5 pieces)

1) Already included in the scope of delivery of the weld-in adapter: 1 x standard seal.

Clamp 2 (DIN32676, ISO28552)

Dimensions mm (in)	Version	Order number
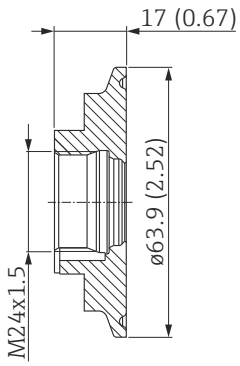 Pressure and temperature range of the adapter ▪ max. 25 bar (362 psi) / max. 150 °C (302 °F) ▪ max. 40 bar (580 psi) / max. 100 °C (212 °F)	▪ Without inspection certificate ▪ With inspection certificate EN10204-3.1 material Material: AISI 316L (1.4435) Roughness (process side): Ra ≤ 0.76 µm (29.9 µin) Approved by CRN: 0F18434.5C	52023995 52024002
Seal ø 15.54 x 2.62 mm (0.61 x 0.1 in)		**Order number**
	Standard seal	
	O-Ring Material: EPDM-70 Conform according FDA, USP Class VI, 3-A, EC1935, GB4806 Approved by EHEDG	52024267[1)] (5 pieces)

1) Already included in the scope of delivery of the weld-in adapter: 1 x standard seal.

APV-Inline

Dimensions mm (in)	Version	Order number
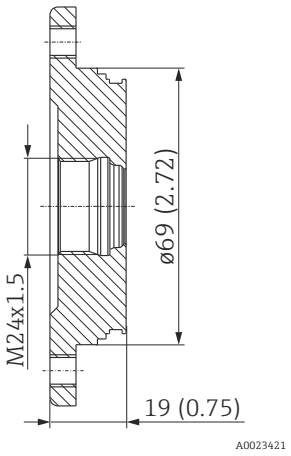 A0023421 Pressure and temperature range of the adapter ▪ max. 25 bar (362 psi) / max. 150 °C (302 °F) ▪ max. 40 bar (580 psi) / max. 100 °C (212 °F)	▪ Without inspection certificate ▪ With inspection certificate EN10204-3.1 material Material: AISI 316L (1.4435) Roughness (process side): Ra ≤ 0.76 µm (29.9 µin)	52024000 52024007
Seal ø 15.54 x 2.62 mm (0.61 x 0.1 in)		**Order number**
	Standard seal	
 A0021901	O-ring Material: EPDM-70 Conform according FDA, USP Class VI, 3-A, EC1935, GB4806 Approved by EHEDG	52024267[1)] (5 pieces)

1) Already included in the scope of delivery of the weld-in adapter: 1 x standard seal.

Process adapter UNI - overview Pressure

The following adapters can be used to create a connection between the customer's process connection and the Endress+Hauser instrument with a universal adapter.

Process adapter UNI overview Pressure	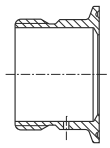 A0023532	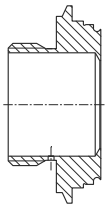 A0023530	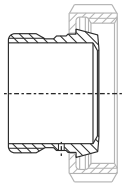 A0023413	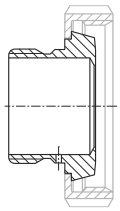 A0023417	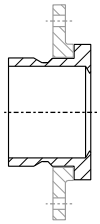 A0021898
	Clamp 2	**Varivent N**	**DIN11851 DN40**	**DIN11851 DN50**	**DRD DN50**
Material	316L (1.4435)	316L (1.4435)	316L (1.4435)	316L (1.4435)	316L (1.4435)
Roughness µm (µin) process side	≤ 0.76 (29.9)	≤ 0.76 (29.9)	≤ 0.76 (29.9)	≤ 0.76 (29.9)	≤ 0,76 (29.9)
Order number process adapter	71114176	71114177	71114172	71114173	71114174
Order number process adapter with inspection certificate[1)]	71114207	71114208	71114178	71114205	71114206
Order number for seal replacement (5 pieces)[2)]	Silicone profile gasket 52023572	Silicone profile gasket 52023572	Silicone profile gasket 52023572	Silicone profile gasket 52023572	Silicone profile gasket 52023572
Scope of delivery	–	–	Slotted nut	Slotted nut	DRD-flange
Measuring device / **Cerabar**	**Suitable for process connection** option[3)]				
PMP23	52J	52J	52J	52J	52J
PMC51	UNJ/UPJ	UNJ/UPJ	UNJ/UPJ	UNJ/UPJ	UNJ/UPJ
PMP55	UPJ	UPJ	UPJ	UPJ	–
Deltapilot					
FMB50	UNJ/UPJ	UNJ/UPJ	UNJ/UPJ	UNJ/UPJ	UNJ/UPJ
FMB70	00/01	00/01	00/01	00/01	00/01
Deltabar					
FMD71	UNJ/UPJ	UNJ/UPJ	UNJ/UPJ	UNJ/UPJ	UNJ/UPJ
FMD78	00	00	00	00	00
Cerabar	**Adapter as an accessory enclosed** option[4)]				
PMC51	RD / R4	RF/R6	RA/R1	RB/R2	RC/R3
Deltapilot					
FMB50	RD/R4	RF/R6	RA/R1	RB/R2	RC/R3

1) Inspection certificate EN10204-3.1 material; AD2000: The material 316L (in contact with process) corresponds to AD2000 – W0/W2/W10.

2) Already included in the scope of delivery of the weld-in adapter: 1 x standard seal.

3) The option can be selected in the Product Configurator via the order feature "Process Connection".

4) The option can be selected in the Product Configurator via the order feature "Accessory Enclosed".

Process adapter UNI - Pressure

Clamp 2

Dimensions mm (in)	Version	Order number
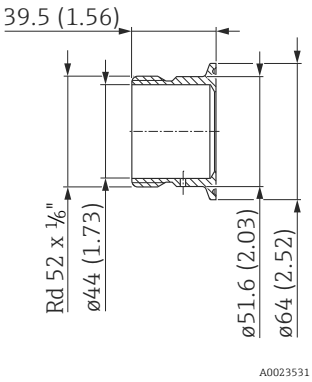 A0023531 Pressure- and temperature range ▪ max. 10 bar (150 psi) / max. 100 °C (212 °F)	▪ Without inspection certificate ▪ With inspection certificate EN10204-3.1 material Material: AISI 316L (1.4435) Roughness (process side): Ra ≤ 0.76 µm (29.9 µin)	71114176 71114207
Seals, back ring		**Order number**
 A0021901	**Standard seal ø 34 x 41.5 x 6.4 mm (1.34 x 1.63 x 0.25 in)**	
	Silicone profile gasket Material: SI-60 Conform according to FDA, USP Class VI, 3-A, EC1935	52023572[1)] (5 pieces)
	Alternative seal ø 34 x 41.5 x 6.4 mm (1.34 x 1.63 x 0.25 in)	
	Profile gasket Material: EPDM-70 Conform according to FDA, USP Class VI, 3-A	71100719 (5 pieces)
 A0042001	**O-ring with back ring**	
	With inspection certificate EN10204-3.1 material Back ring: Dimensions: ø 38.2 x 43.6 x 5.6 mm (1.5 x 1.72 x 0.22 in) Material: AISI 316L (1.4404) O-ring: Dimensions: ø 36 x 2.5 mm (1.42 x 0.1 in) Material: EPDM-70 Shore A Conform according to FDA, USP, Class VI, 3-A Approved by EHEDG	71431380

1) Already included in the scope of delivery of the weld-in adapter: 1 x standard seal.

Varivent N

Dimensions mm (in)	Version	Order number
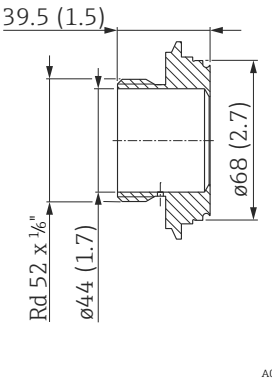 A0023526 Pressure- and temperature range ▪ max. 10 bar (150 psi) / max. 100 °C (212 °F) (max. 135 °C (275 °F) for 30 minutes)	▪ Without inspection certificate ▪ With inspection certificate EN10204-3.1 material Material: AISI 316L (1.4435) Roughness (process side): Ra ≤ 0.76 µm (29.9 µin)	71114177 71114208
Seals, back ring		**Order number**
 A0021901	**Standard seal ø 34 x 41.5 x 6.4 mm (1.34 x 1.63 x 0.25 in)**	
	Silicone profile gasket Material: SI-60 Conform according to FDA, USP Class VI, 3-A, EC1935	52023572[1)] (5 pieces)
	Alternative seal ø 34 x 41.5 x 6.4 mm (1.34 x 1.63 x 0.25 in)	
	Profile gasket Material: EPDM-70 Conform according to FDA, USP Class VI, 3-A	71100719 (5 pieces)
 A0042001	**O-ring with back ring**	
	With inspection certificate EN10204-3.1 material Back ring: Dimensions: ø 38.2 x 43.6 x 5.6 mm (1.5 x 1.72 x 0.22 in) Material: AISI 316L (1.4404) O-ring: Dimensions: ø 36 x 2.5 mm (1.42 x 0.1 in) Material: EPDM-70 Shore A Conform according to FDA, USP, Class VI, 3-A Approved by EHEDG	71431380

1) Already included in the scope of delivery of the weld-in adapter: 1 x standard seal.

DIN11851 DN40

Dimensions mm (in)	Version	Order number
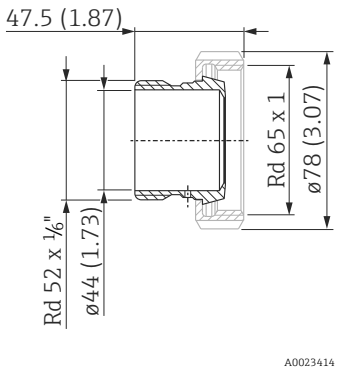 Pressure- and temperature range ▪ max. 10 bar (150 psi) / max. 100 °C (212 °F) (max. 135 °C (275 °F) for 30 minutes)	▪ Without inspection certificate ▪ With inspection certificate EN10204-3.1 material Material: AISI 316L (1.4435) Roughness (process side): Ra ≤ 0.76 µm (29.9 µin)	71114172 71114178
	Material slotted nut: Endress+Hauser supplies these slotted nuts in stainless steel AISI 304 (DIN/EN material number 1.4301) or in AISI 304L (DIN/EN material number 1.4307).	

Seals, back ring		Order number
	**Standard seal ø 34 x 41.5 x 6.4 mm (1.34 x 1.63 x 0.25 in)**	
	Silicone profile gasket Material: SI-60 Conform according to FDA, USP Class VI, 3-A, EC1935	52023572[1)] (5 pieces)
	Alternative seal ø 34 x 41.5 x 6.4 mm (1.34 x 1.63 x 0.25 in)	
	Profile gasket Material: EPDM-70 Conform according to FDA, USP Class VI, 3-A	71100719 (5 pieces)
	**O-ring with back ring**	
	With inspection certificate EN10204-3.1 material Back ring: Dimensions: ø 38.2 x 43.6 x 5.6 mm (1.5 x 1.72 x 0.22 in) Material: AISI 316L (1.4404) O-ring: Dimensions: ø 36 x 2.5 mm (1.42 x 0.1 in) Material: EPDM-70 Shore A Conform according to FDA, USP, Class VI, 3-A Approved by EHEDG	71431380

1) Already included in the scope of delivery of the weld-in adapter: 1 x standard seal.

DIN11851 DN50

Dimensions mm (in)	Version	Order number
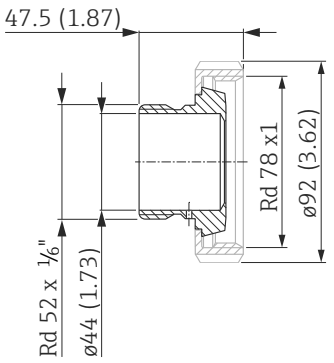 A0023416 Pressure- and temperature range ▪ max. 10 bar (150 psi) / max. 100 °C (212 °F) (max. 135 °C (275 °F) for 30 minutes)	▪ Without inspection certificate ▪ With inspection certificate EN10204-3.1 material Material: AISI 316L (1.4435) Roughness (process side): Ra ≤ 0.76 µm (29.9 µin)	71114173 71114205
	Material slotted nut: Endress+Hauser supplies these slotted nuts in stainless steel AISI 304 (DIN/EN material number 1.4301) or in AISI 304L (DIN/EN material number 1.4307).	

Seals, back ring		Order number
 A0021901	**Standard seal ø 34 x 41.5 x 6.4 mm (1.34 x 1.63 x 0.25 in)**	
	Silicone profile gasket Material: SI-60 Conform according to FDA, USP Class VI, 3-A, EC1935	52023572[1] (5 pieces)
	Alternative seal ø 34 x 41.5 x 6.4 mm (1.34 x 1.63 x 0.25 in)	
	Profile gasket Material: EPDM-70 Conform according to FDA, USP Class VI, 3-A	71100719 (5 pieces)
 A0042001	**O-ring with back ring**	
	With inspection certificate EN10204-3.1 material Back ring: Dimensions: ø 38.2 x 43.6 x 5.6 mm (1.5 x 1.72 x 0.22 in) Material: AISI 316L (1.4404) O-ring: Dimensions: ø 36 x 2.5 mm (1.42 x 0.1 in) Material: EPDM-70 Shore A Conform according to FDA, USP, Class VI, 3-A Approved by EHEDG	71431380

1) Already included in the scope of delivery of the weld-in adapter: 1 x standard seal.

DRD DN50

Dimensions mm (in)	Version	Order number
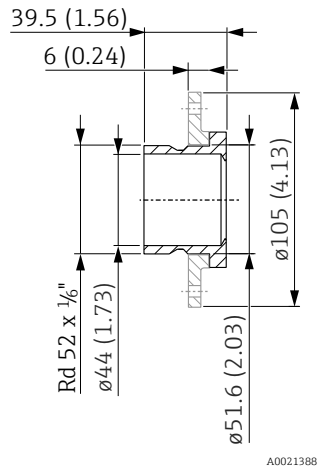 Pressure- and temperature range ▪ max. 10 bar (150 psi) / max. 100 °C (212 °F) (max. 135 °C (275 °F) for 30 minutes)	▪ Without inspection certificate ▪ With inspection certificate EN10204-3.1 material Material: AISI 316L (1.4435) Roughness (process side): Ra ≤ 0.76 µm (29.9 µin)	71114174 71114206
	Material DRD flange: Endress+Hauser supplies these slotted nuts in stainless steel AISI 304 (DIN/EN material number 1.4301).	
Seals ø 34 x 41.5 x 6.4 mm (1.34 x 1.63 x 0.25 in)		**Order number**
	**Standard seal**	
	Silicone profile gasket Material: SI-60 Conform according to FDA, USP Class VI, EC1935	52023572[1)] (5 pieces)
	Alternative seal	
	Profile gasket Material: EPDM-70 Conform according to FDA, USP Class VI	71100719 (5 pieces)

1) Already included in the scope of delivery of the weld-in adapter: 1 x standard seal.

Flush mount pipe connection M24×1.5 - Level and Pressure

General

- Material: AISI 316L (1.4404)
- Roughness: Ra wetted (inside) 0.76 µm (29.9 µin)/Ra outside: 1.6 µm (62.99 µin)
- Process temperature range: −40 … +85 °C (−40 … +185 °F)
  For a maximum 30 min: +85 … +150 °C (+185 … +302 °F), e.g. SIP cleaning

Pipe connection, weldable

Dimensions mm (in)

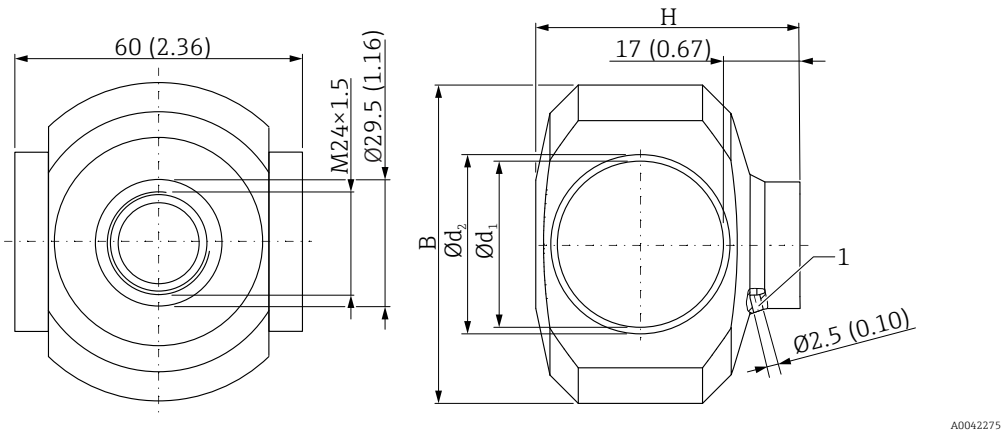

1 Leakage hole

Nominal diameter	DN25	DN32	DN40	DN50
Order number	71477801	71477803	71477807	71477808
B	67-mm (2.64 in)	70 mm (2.56 in)	73 mm (2.87 in)	81 mm (3.19 in)
H	48 mm (1.89 in)	54 mm (2.13 in)	60 mm (2.36 in)	72 mm (2.83 in)
Ø d_1	26 mm (1.02 in)	32 mm (1.26 in)	38 mm (1.50 in)	50 mm (2.00 in)
Ø d_2	29 mm (1.14 in)	35 mm (1.34 in)	41 mm (1.61 in)	53 mm (2.09 in)
MWP for gases in fluid group 2[1) 2)]	26 bar (377 psi)	26 bar (377 psi)	20 bar (290 psi)	20 bar (290 psi)
MWP for gases in fluid group 1[1) 2)]	26 bar (377 psi)	26 bar (377 psi)	26 bar (377 psi)	26 bar (377 psi)
Measuring devices	**Pipe connection as an accessory enclosed** option[3)]			
Liquipoint				
FTW23, FTW33	QS	QU	QW	QY
Liquitrend				
QMW43	QS	QU	QW	QY
Ceraphant				
PTP33B	QS	QU	QW	QY
Cerabar				
PMP23	QS	QU	QW	QY

1) The maximum process pressure depends on the temperature.

2) Specifications according to PED, Rev. 01, Pipe adapter, classified according to PED (EU) 2014/68, Article 4, paragraph 3.

3) The option can be selected in the Product Configurator via the order feature "Accessory Enclosed".

Pipe connection, clamp connection

Dimensions mm (in)

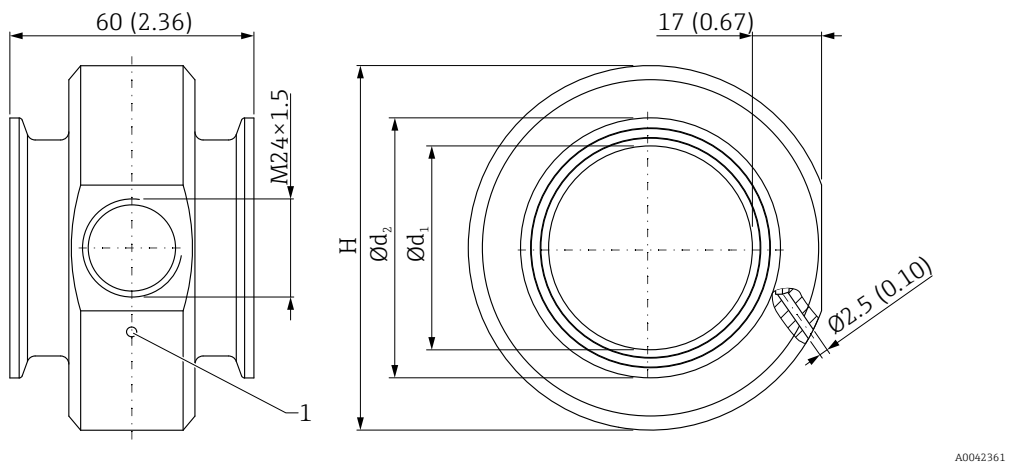

1 Leakage hole

Nominal diameter	DN25	DN32	DN40	DN50
Order number	71477812	71477813	71477816	71477817
H	68 mm (2.68 in)	73 mm (2.87 in)	78,5 mm (3.09 in)	90 mm (3.54 in)
Ø d_1	26 mm (1.02 in)	32 mm (1.26 in)	38 mm (1.50 in)	50 mm (2.00 in)
Ø d_2	50 mm (2.00 in)	50 mm (2.00 in)	50 mm (2.00 in)	64 mm (2.50 in)
MWP for gases in fluid group 2[1) 2)]	26 bar (377 psi)	26 bar (377 psi)	20 bar (290 psi)	20 bar (290 psi)
MWP for gases in fluid group 1[1) 2)]	26 bar (377 psi)	26 bar (377 psi)	26 bar (377 psi)	26 bar (377 psi)
Measuring devices	**Pipe connection as an accessory enclosed** option[3)]			
Liquipoint				
FTW23, FTW33	QT	QV	QX	QZ
Liquitrend				
QMW43	QT	QV	QX	QZ
Ceraphant				
PTP33B	QT	QV	QX	QZ
Cerabar				
PMP23	QT	QV	QX	QZ

1) The maximum process pressure depends on the temperature

2) Specifications according to PED, Rev. 01, Pipe adapter, classified according to PED (EU) 2014/68, Article 4, paragraph 3

3) The option can be selected in the Product Configurator via the order feature "Accessory Enclosed".

Mounting and welding hints

Absolute care must be taken when welding stainless steel. The applied work pieces and tools must be rust-free. Also, no normal steel parts may be present in the vicinity.

During the welding, the adapter should be protected against deformations by the welding dummy or by other means of cooling according to usual welding practice (e.g. water cooling). With a suitable seal the welding dummy can also be used to flush-plug the process when starting-up the plant. Before doing so, make sure that the material of the dummy fits the process.

Weld-in adapter with leakage hole or leakage port

If installed horizontally and weld-in adapters with a leakage hole or leakage port are used, ensure that the leakage hole or the leakage port is pointing down. This allows leaks to be detected as quickly as possible.

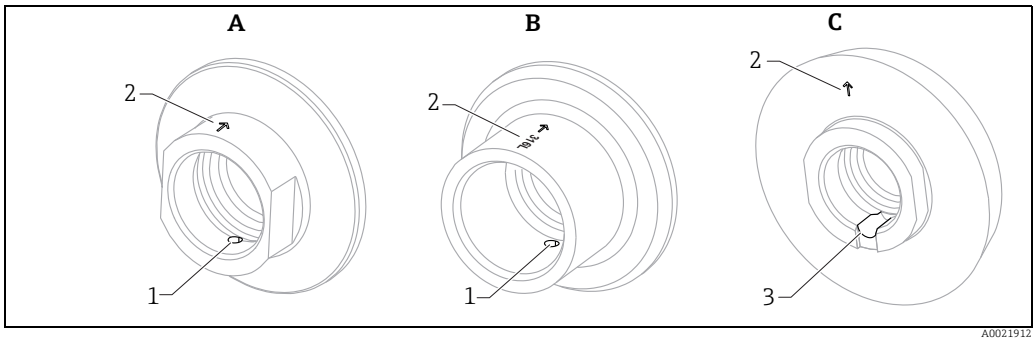

A Process adapter with leakage hole
B Weld-in adapter with leakage hole
C Process adapter with leakage port
1 Leakage hole
2 Mark, e.g. material and/or arrow, 180° across from hole
3 Leakage port

Notes for pressure measuring devices

Before mounting a weld-in adapter for a pressure measuring device, please note the following:

- The maximum pressure resistance of a sensor is limited. Therefore, the welding must be performed very carefully if a weld-in adapter is applied for screwing-in a pressure measuring cell.
- In order to avoid deformations of the weld-in adapter during the welding it is essential to use the correct welding dummy for heat dissipation. Otherwise the tightness and pressure resistance can not be guaranteed after screwing in the sensor. The welding dummy prevents deformation of the weld-in adapter, which could cause leaks after the mounting of the sensor.

Preparation

- Drill a hole at the required position into the wall of the vessel or pipe
  Hole diameter: The outer diameter of the welding adapter (max. tolerance: +0.2 mm (0.01 in))

- Slide the weld-in adapter with welding dummy into the hole and align it in a way as to ensure that the sensor will be positioned correctly. See the chapter "Install measuring device" from → ä 65.

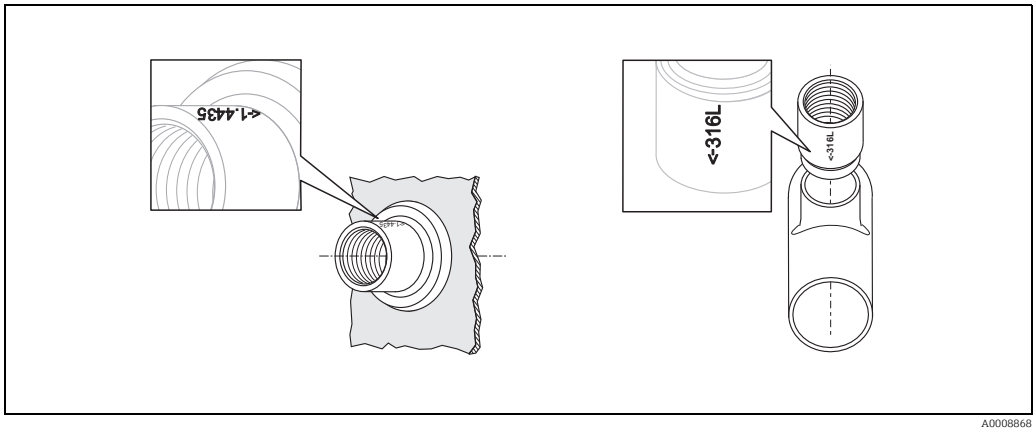

Welding procedure

It is recommended to partition the welding seam into several segments (according to common welding practice).

- Pin the weld-in adapter with four or six welding spots to the vessel or tube (see the figures).
- Weld the segments between the spots in order to avoid deformations and leakages. After welding a segment always weld the opposite segment.
- After welding two segments stop the welding procedure until the workpiece is cooled down.
- Let the weld-in adapter cool down after the welding and remove the welding dummy.

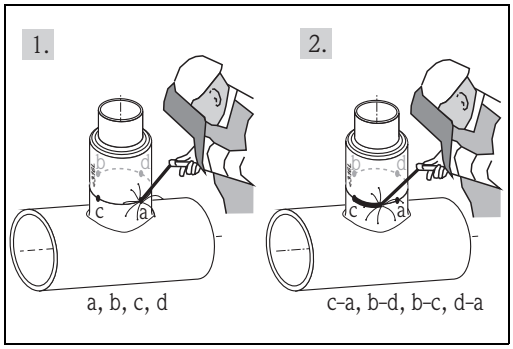

Welding of pipes

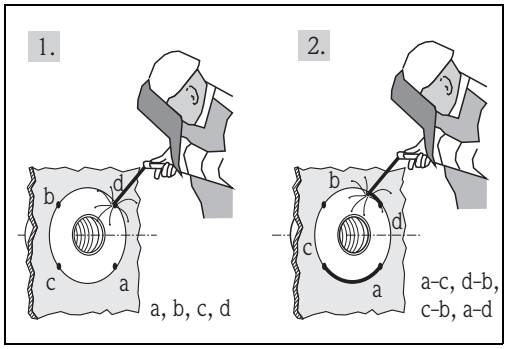

Welding of vessels

To obtain the desired surface roughness, the range of the welding seam must be polished.

Before mounting

Note for Liquiphant

Some devices are supplied with a flat gasket on the adapter.

- Remove the flat gasket
- Use supplied o-ring or pressure ring with o-ring

Scope of delivery: O-ring for G ¾ d=55, G 1 d=53, G 1 d=60

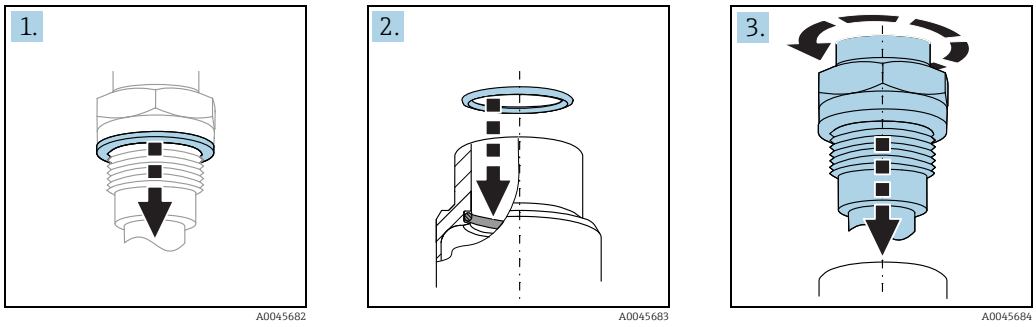

Scope of delivery: Pressure ring with o-ring für G ¾ d=50, G ¾ d=29

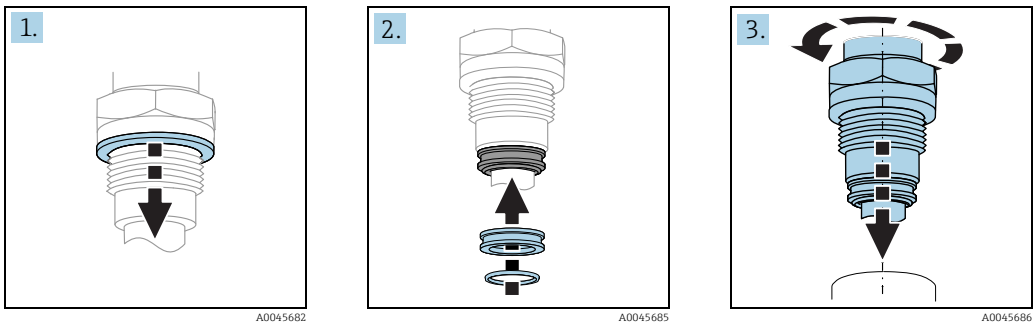

Install measuring device

Notes for level measuring device (e.g. Liquiphant)

Consider marking

The marking indicates the position of the tuning fork. The marking appears either as a material specification (e.g. 316L) or a thread designation (e.g. G ½) in the following locations: On the process- or weld-in adapter or on the name plate of the measuring device.

If installed horizontally in vessels

- the marking is face up
- ensure that the leakage hole is pointing down. This allows leaks to be detected as quickly as possible, see chapter "Weld-in adapter with leakage hole/leakage port" → ä 63.

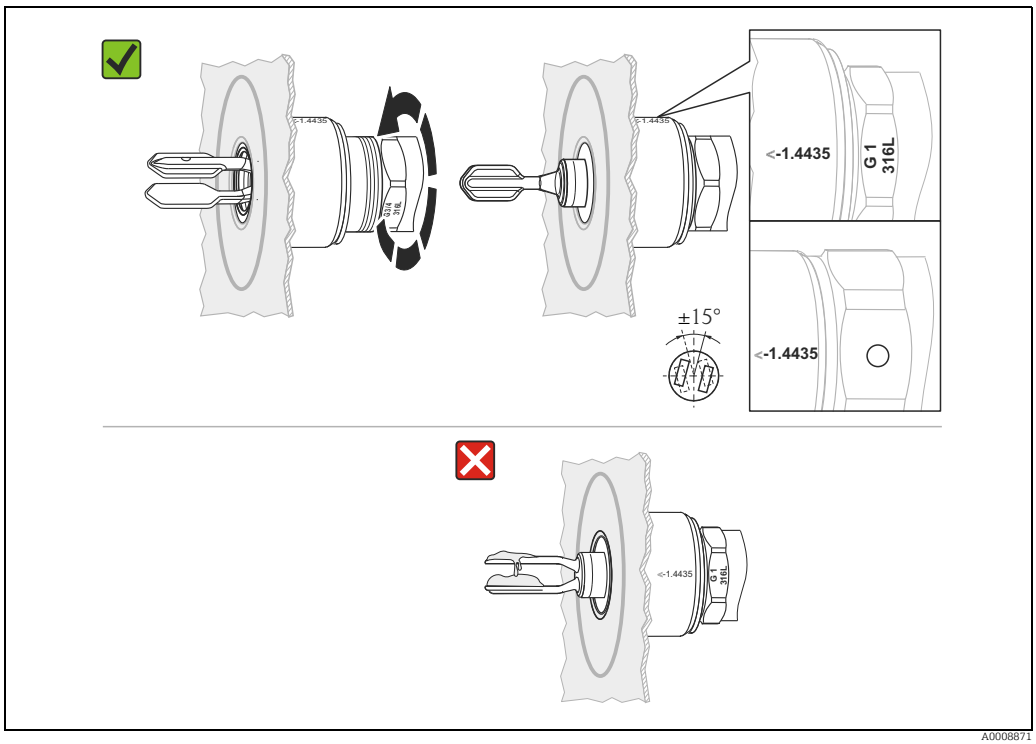

Orientation in the vessel

When mounted into pipes, the fork must be aligned in the direction of the flow according to the mark.

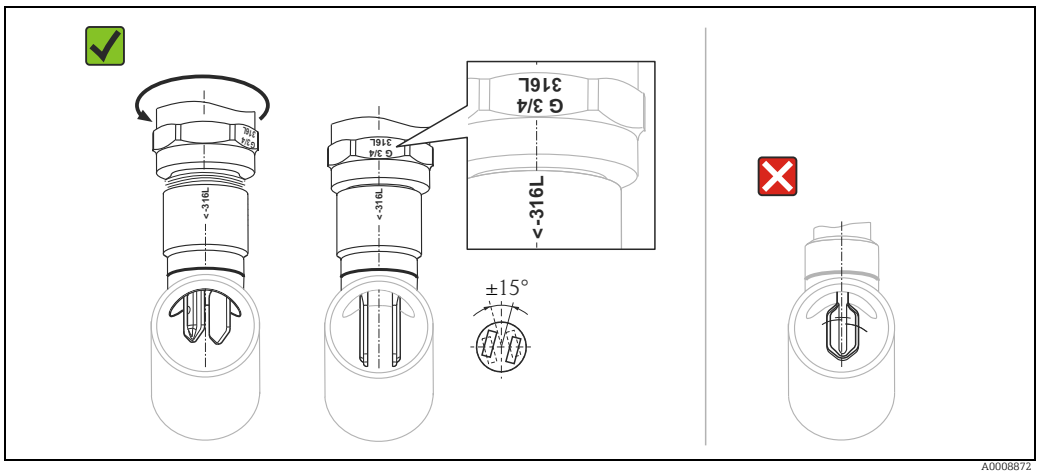

Orientation in the pipe

Notes for pressure sensor

- Before mounting, all sealing surfaces at the weld-in adapter must be cleaned.
- Remove the protective cap from the pressure sensor.

Do not touch or damage the process isolating diaphragm!

- Screw the pressure sensor firmly at the hexagonal nut. The threaded connection must be fastened fingertight. It is recommended to secure the threaded connection with a torque of 60 Nm (±20 Nm) to protect it against vibrations and other influences.

Pressure resistance

The material of the weld-in adapter and the quality of the welding are crucial for pressure resistance. The complete length of the thread has to be used in order to ensure maximum pressure resistance.

Flange - overview

Specifications

The material of the flanges delivered is AISI 316L with the material number 1.4404 or 1.4435. With regard to their stability-temperature property, the materials 1.4404 and 1.4435 are grouped in DIN EN 1092-1 table 18 under 13E0 and in JIS B2220 table 5 under 023b. The ASME flanges are dual rated flanges (316/316L) and grouped in table 2-2.2 according to ASME B16.5.

Values in inches are converted to values in millimeters using the factor 2.54.
The mm values are rounded off to the nearest 0 or 5 in the ASME standard.

Versions

EN flanges	ASME flanges	JIS flanges
European Standards	America Society of Mechanical Engineers	Japanese Industrial Standard
DIN EN 1092-1	ASME B16.5	B2220

Flange Norm DIN EN 1092-1

Endress+Hauser usually delivers only flanges with flat face. This type of flange has hardly changed. Thus, a comparison is done only for this sealing surfaces. Due to the change of the designation of the sealing surface mistakes may occur occasionally. The roughness (Rz) of the old raised face form C and the new one B1 have an overlapping between 40 to 50 µm. In this roughness window both standards are fulfilled.
Therefore, at Endress+Hauser the flanges are specified according to both flange standards. This double marking makes it clear that both standards are met.

Flange	Sealing surface	DIN EN 1092-1		
		Form	Rz (µm)	Ra (µm)
without raised face	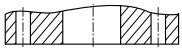	A	12.5 - 50	3.2 - 12.5
with raised face		B1[1)] B2[2)]	12.5 - 50 3.2 - 12.5	3.2 - 12.5 0.8 - 3.2
tongue groove	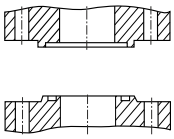	C D	3.2 - 12.5	0.8 - 3.2
projection recess	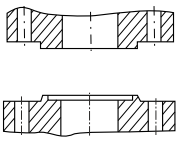	E F	12.5 - 50	3.2 - 12.5
projection recess	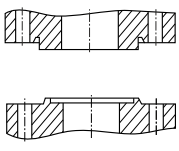	H G	3.2 - 12.5	3.2 - 12.5

1) typically of PN2.5 bis PN40

2) typically of PN63

Height of raised face

Unit of measurement in mm (in)

Standard	Flange	Height of raised face f	Tolerance
DIN EN 1092-1	≤ DN 32	2 (0.08)	0 −1 (−0.04)
	> DN 32 up to DN 250	3 (0.12)	0 −2 (−0.08)
	> DN 250 up to DN 500	4 (0.16)	0 −3 (−0.12)
	> DN 500	5 (0.19)	0 −4 (−0.16)
ASME B16.5	≤ Class 300	1.6 (0.06)	±0.75 (±0.03)
	≥ Class 600	6.4 (0.25)	±0.5 (±0.02)
JIS B2220	< DN 20	1.5 (0.06) 0	–
	> DN 20 up to DN 50	2 (0.08) 0	
	> DN 50	3 (0.12) 0	

Mechanical Construction

EN flanges (DIN EN 1092-1)



A0029176

(Raised face B1)

L Diameter of holes
d Raised face diameter
K Diameter of hole circle
D Flange diameter
b Total flange thickness
f Raised face height (general 2 mm (0.08 in))

PN16

In following tables, the unit of measurement are indicated in mm (in) unless otherwise noted.

DN	D	b	K	d	L	approx. kg (lbs)
25	115 (4.53)	18 (0.71)	85 (3.35)	68 (2.68)	4x∅14 (0.55)	1.50 (3.31)
32	140 (5.51)	18 (0.71)	100 (3.94)	78 (3.07)	4x∅18 (0.71)	2.00 (4.41)
40	150 (5.91)	18 (0.71)	110 (4.33)	88 (3.46)	4x∅18 (0.71)	2.50 (5.51)
50	165 (6.50)	18 (0.71)	125 (4.92)	102 (4.02)	4x∅18 (0.71)	2.90 (6.39)
65	185 (7.28)	18 (0.71)	145 (5.71)	122 (4.80)	8x∅18 (0.71)	3.50 (7.72)
80	200 (7.87)	20 (0.79)	160 (6.30)	138 (5.43)	8x∅18 (0.71)	4.50 (9.92)
100	220 (8.66)	20 (0.79)	180 (7.09)	158 (6.22)	8x∅18 (0.71)	5.50 (12.13)
125	250 (9.84)	22 (0.87)	210 (8.27)	188 (7.40)	8x∅18 (0.71)	8.00 (17.64)
150	285 (11.2)	22 (0.87)	240 (9.45)	212 (8.35)	8x∅22 (0.87)	10.5 (23.15)
200	340 (13.4)	24 (0.94)	295 (11.6)	268 (10.6)	12x∅22 (0.87)	16.5 (36.38)
250	405 (15.9)	26 (1.02)	355 (14.0)	320 (12.6)	12x∅26 (1.02)	25.0 (55.13)
300	460 (18.1)	28 (1.10)	410 (16.1)	378 (14.9)	12x∅26 (1.02)	35.0 (77.18)

PN25

DN	D	b	K	d	L	approx. kg (lbs)
25	115 (4.53)	18 (0.71)	85 (3.35)	68 (2.68)	4x∅14 (0.55)	1.50 (3.31)
32	140 (5.51)	18 (0.71)	100 (3.94)	78 (3.07)	4x∅18 (0.71)	2.00 (4.41)
40	150 (5.91)	18 (0.71)	110 (4.33)	88 (3.46)	4x∅18 (0.71)	2.50 (5.51)
50	165 (6.50)	20 (0.79)	125 (4.92)	102 (4.02)	4x∅18 (0.71)	3.00 (6.62)
65	185 (7.28)	22 (0.87)	145 (5.71)	122 (4.80)	8x∅18 (0.71)	4.50 (9.92)
80	200 (7.87)	24 (0.94)	160 (6.30)	138 (5.43)	8x∅18 (0.71)	5.50 (12.13)
100	235 (9.25)	24 (0.94)	190 (7.48)	162 (6.38)	8x∅22 (0.87)	7.50 (16.54)
125	270 (10.6)	26 (1.02)	220 (8.66)	188 (7.40)	8x∅26 (1.02)	11.0 (24.26)
150	300 (11.8)	28 (1.10)	250 (9.84)	218 (8.58)	8x∅26 (1.02)	14.5 (31.97)
200	360 (14.2)	30 (1.18)	310 (12.2)	278 (10.9)	12x∅26 (1.02)	22.5 (49.61)
250	425 (16.7)	32 (1.26)	370 (14.6)	335 (13.2)	12x∅30 (1.18)	33.5 (73.9)
300	485 (19.1)	34 (1.34)	430 (16.9)	395 (15.6)	16x∅30 (1.18)	46.5 (102.5)

PN40

DN	D	b	K	d	L	approx. kg (lbs)
25	115 (4.53)	18 (0.71)	85 (3.35)	68 (2.68)	4x∅14 (0.55)	1.50 (3.31)
32	140 (5.51)	18 (0.71)	100 (3.94)	78 (3.07)	4x∅18 (0.71)	2.00 (4.41)
40	150 (5.91)	18 (0.71)	110 (4.33)	88 (3.46)	4x∅18 (0.71)	2.50 (5.51)
50	165 (6.50)	20 (0.79)	125 (4.92)	102 (4.02)	4x∅18 (0.71)	3.00 (6.62)
65	185 (7.28)	22 (0.87)	145 (5.71)	122 (4.80)	8x∅18 (0.71)	4.50 (9.92)
80	200 (7.87)	24 (0.94)	160 (6.30)	138 (5.43)	8x∅18 (0.71)	5.50 (12.13)
100	235 (9.25)	24 (0.94)	190 (7.48)	162 (6.38)	8x∅22 (0.87)	7.50 (16.54)
125	270 (10.6)	26 (1.02)	220 (8.66)	188 (7.40)	8x∅26 (1.02)	11.0 (24.26)
150	300 (11.8)	28 (1.10)	250 (9.84)	218 (8.58)	8x∅26 (1.02)	14.5 (31.97)
200	375 (14.8)	36 (1.42)	320 (12.6)	285 (11.2)	12x∅30 (1.18)	29.0 (63.95)
250	450 (17.7)	38 (1.50)	385 (15.2)	345 (13.6)	12x∅33 (1.30)	44.5 (98.12)
300	515 (20.3)	42 (1.65)	450 (17.7)	410 (16.1)	16x∅33 (1.30)	64.0 (141.1)

PN63

DN	D	b	K	d	L	approx. kg (lbs)
25	140 (5.51)	24 (0.94)	100 (3.94)	68 (2.68)	4x∅18 (0.71)	2.50 (5.51)
32	155 (6.10)	24 (0.94)	110 (4.33)	78 (3.07)	4x∅22 (0.87)	3.50 (7.72)
40	170 (6.69)	26 (1.02)	125 (4.92)	88 (3.46)	4x∅22 (0.87)	4.50 (9.92)
50	180 (7.09)	26 (1.02)	135 (5.31)	102 (4.02)	4x∅22 (0.87)	5.00 (11.03)
65	205 (8.07)	26 (1.02)	160 (6.30)	122 (4.80)	8x∅22 (0.87)	6.00 (13.23)
80	215 (8.46)	28 (1.10)	170 (6.69)	138 (5.43)	8x∅22 (0.87)	7.50 (16.54)
100	250 (9.84)	30 (1.18)	200 (7.87)	162 (6.38)	8x∅26 (1.02)	10.5 (23.15)
125	295 (11.6)	34 (1.34)	240 (9.45)	188 (7.40)	8x∅30 (1.18)	16.5 (36.38)
150	345 (13.6)	36 (1.42)	280 (11.0)	218 (8.58)	8x∅33 (1.30)	24.5 (54.02)
200	415 (16.3)	42 (1.65)	345 (13.6)	285 (11.2)	12x∅36 (1.42)	40.5 (89.3)
250	470 (18.5)	46 (1.81)	400 (15.7)	345 (13.6)	12x∅36 (1.42)	58.0 (127.9)
300	530 (20.9)	52 (2.05)	460 (18.1)	410 (16.1)	16x∅36 (1.42)	83.5 (184.1)

PN100

DN	D	b	K	d	L	approx. kg (lbs)
25	140 (5.51)	24 (0.94)	100 (3.94)	68 (2.68)	4x∅18 (0.71)	2.50 (5.51)
32	155 (6.10)	24 (0.94)	110 (4.33)	78 (3.07)	4x∅22 (0.87)	3.50 (7.72)
40	170 (6.69)	26 (1.02)	125 (4.92)	88 (3.46)	4x∅22 (0.87)	4.50 (9.92)
50	195 (7.68)	28 (1.10)	145 (5.71)	102 (4.02)	4x∅26 (1.02)	6.00 (13.23)
65	220 (8.66)	30 (1.18)	170 (6.69)	122 (4.80)	8x∅26 (1.02)	8.00 (17.64)
80	230 (9.06)	32 (1.26)	180 (7.09)	138 (5.43)	8x∅26 (1.02)	9.50 (20.95)
100	265 (10.4)	36 (1.42)	210 (8.27)	162 (6.38)	8x∅30 (1.18)	14.0 (30.87)
125	315 (12.4)	40 (1.57)	250 (9.84)	188 (7.40)	8x∅33 (1.30)	22.5 (49.61)
150	355 (14.0)	44 (1.73)	290 (11.4)	218 (8.58)	12x∅33 (1.30)	30.5 (67.25)
200	430 (16.9)	52 (2.05)	360 (14.2)	285 (11.2)	12x∅36 (1.42)	54.5 (120.2)
250	505 (19.9)	60 (2.36)	430 (16.9)	345 (13.6)	12x∅39 (1.54)	87.5 (192.9)
300	585 (23.0)	68 (2.68)	500 (19.7)	410 (16.1)	16x∅42 (1.65)	131.5 (289.9)

ASME-Flange (ASME B16.5)

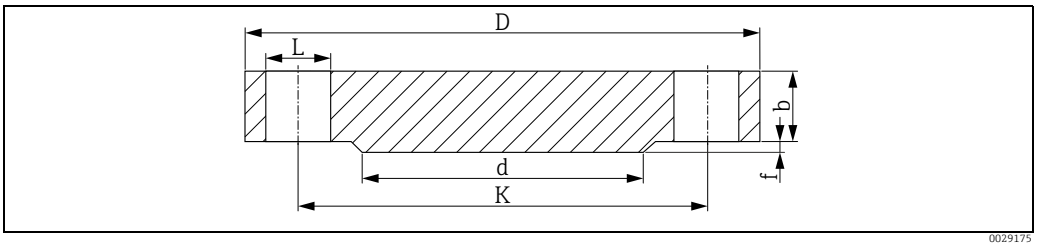

(Raised face RF)

L Diameter of holes
d Raised face diameter
K Diameter of hole circle
D Flange diameter
b Total flange thickness
f Raised face height Class 150/300: 1.6 mm (0.06 in) or from Class 600: 6.4 mm (0.25 in)

Note!
Surface finish of the gasket faces Ra ≤ 3.2 to 6.3 µm (126 to 248 µin).

Class 150

In following tables, the unit of measurement are indicated in mm (in) unless otherwise noted.

NPS (Nominal pipe size)	D	b	K	d	L	approx. kg (lbs)
1"	108.0 (4.25)	14.2 (0.56)	79.2 (3.12)	50.8 (2.00)	4x∅15.7 (0.62)	0.86 (1.9)
1¼"	117.3 (4.62)	15.7 (0.62)	88.9 (3.50)	63.5 (2.50)	4x∅15.7 (0.62)	1.17 (2.58)
1½"	127.0 (5.00)	17.5 (0.69)	98.6 (3.88)	73.2 (2.88)	4x∅15.7 (0.62)	1.53 (3.37)
2"	152.4 (6.00)	19.1 (0.75)	120.7 (4.75)	91.9 (3.62)	4x∅19.1 (0.75)	2.42 (5.34)
2½"	177.8 (7.00)	22.4 (0.88)	139.7 (5.50)	104.6 (4.12)	4x∅19.1 (0.75)	3.94 (8.69)
3"	190.5 (7.50)	23.9 (0.94)	152.4 (6.00)	127.0 (5.00)	4x∅19.1 (0.75)	4.93 (10.87)
3½"	215.9 (8.50)	23.9 (0.94)	177.8 (7.00)	139.7 (5.50)	8x∅19.1 (0.75)	6.17 (13.60)
4"	228.6 (9.00)	23.9 (0.94)	190.5 (7.50)	157.2 (6.19)	8x∅19.1 (0.75)	7.00 (15.44)
5"	254.0 (10.0)	23.9 (0.94)	215.9 (8.50)	185.7 (7.31)	8x∅22.4 (0.88)	8.63 (19.03)
6"	279.4 (11.0)	25.4 (1.00)	241.3 (9.50)	215.9 (8.50)	8x∅22.4 (0.88)	11.3 (24.92)
8"	342.9 (13.5)	28.4 (1.12)	298.5 (11.8)	269.7 (10.6)	8x∅22.4 (0.88)	19.6 (43.22)
10"	406.4 (16.0)	30.2 (1.19)	362.0 (14.3)	323.8 (12.7)	12x∅25.4 (1.00)	28.8 (63.50)

Class 300

NPS (Nominal pipe size)	D	b	K	d	L	approx. kg (lbs)
1"	124.0 (4.88)	17.5 (0.69)	88.9 (3.50)	50.8 (2.00)	4x∅19.1 (0.75)	1.39 (3.06)
1¼"	133.4 (5.25)	19.1 (0.75)	98.6 (3.88)	63.5 (2.50)	4x∅19.1 (0.75)	1.79 (3.95)
1½"	155.4 (6.12)	20.6 (0.81)	114.3 (4.50)	73.2 (2.88)	4x∅22.4 (0.88)	2.66 (5.87)
2"	165.1 (6.50)	22.4 (0.88)	127.0 (5.00)	91.9 (3.62)	8x∅19.1 (0.75)	3.18 (7.01)
2½"	190.5 (7.50)	25.4 (1.00)	149.4 (5.88)	104.6 (4.12)	8x∅22.4 (0.88)	4.85 (10.69)
3"	209.5 (8.25)	28.4 (1.12)	168.1 (6.62)	127.0 (5.00)	8x∅22.4 (0.88)	6.81 (15.02)
3½"	228.6 (9.00)	30.2 (1.19)	184.2 (7.25)	139.7 (5.50)	8x∅22.4 (0.88)	8.71 (19.21)
4"	254.0 (10.0)	31.8 (1.25)	200.2 (7.88)	157.2 (6.19)	8x∅22.4 (0.88)	11.5 (25.36)
5"	279.4 (11.0)	35.1 (1.38)	235.0 (9.25)	185.7 (7.31)	8x∅22.4 (0.88)	15.6 (34.4)
6"	317.5 (12.5)	36.6 (1.44)	269.7 (10.6)	215.9 (8.50)	12x∅22.4 (0.88)	20.9 (46.08)
8"	381.0 (15.0)	41.1 (1.62)	330.2 (13.0)	269.7 (10.6)	12x∅25.4 (1.00)	34.3 (75.63)
10"	444.5 (17.5)	47.8 (1.88)	387.4 (15.3)	323.8 (12.7)	16x∅28.4 (1.12)	53.3 (117.5)

Class 600

NPS (Nominal pipe size)	D	b	K	d	L	approx. kg (lbs)
1"	124.0 (4.88)	17.5 (0.69)	88.9 (3.50)	50.8 (2.00)	4x∅19.1 (0.75)	1.60 (3.53)
1¼"	133.4 (5.25)	20.6 (0.81)	98.6 (3.88)	63.5 (2.50)	4x∅19.1 (0.75)	2.23 (4.92)
1½"	155.4 (6.12)	22.4 (0.88)	114.3 (4.50)	73.2 (2.88)	4x∅22.4 (0.88)	3.25 (7.17)
2"	165.1 (6.50)	25.4 (1.00)	127.0 (5.00)	91.9 (3.62)	8x∅19.1 (0.75)	4.15 (9.15)
2½"	190.5 (7.50)	28.4 (1.12)	149.4 (5.88)	104.6 (4.12)	8x∅22.4 (0.88)	6.13 (13.52)
3"	209.5 (8.25)	31.8 (1.25)	168.1 (6.62)	127.0 (5.00)	8x∅22.4 (0.88)	8.44 (18.61)
3½"	228.6 (9.00)	35.1 (1.38)	184.2 (7.25)	139.7 (5.50)	8x∅25.4 (1.00)	11.0 (24.26)
4"	273.1 (10.8)	38.1 (1.50)	215.9 (8.50)	157.2 (6.19)	8x∅25.4 (1.00)	17.3 (38.15)
5"	330.2 (13.0)	44.5 (1.75)	266.7 (10.5)	185.7 (7.31)	8x∅28.4 (1.12)	29.4 (64.83)
6"	355.6 (14.0)	47.8 (1.88)	292.1 (11.5)	215.9 (8.50)	12x∅28.4 (1.12)	36.1 (79.6)
8"	419.1 (16.5)	55.6 (2.19)	349.3 (13.8)	269.7 (10.6)	12x∅31.8 (1.25)	58.9 (129.9)
10"	508.0 (20.0)	63.5 (2.50)	431.8 (17.0)	323.8 (12.7)	16x∅35.1 (1.38)	97.5 (214.9)

Class 900

NPS (Nominal pipe size)	D	b	K	d	L	approx. kg (lbs)
1"	149.4 (5.88)	28.4 (1.12)	101.6 (4.00)	50.8 (2.00)	4x∅25.4 (1.00)	3.57 (7.87)
1¼"	158.8 (6.25)	28.4 (1.12)	111.3 (4.38)	63.5 (2.50)	4x∅25.4 (1.00)	4.14 (9.13)
1½"	177.8 (7.00)	31.8 (1.25)	124.0 (4.88)	73.2 (2.88)	4x∅28.4 (1.12)	5.75 (12.68)
2"	215.9 (8.50)	38.1 (1.50)	165.1 (6.50)	91.9 (3.62)	8x∅25.4 (1.00)	10.1 (22.27)
2½"	244.4 (9.62)	41.1 (1.62)	190.5 (7.50)	104.6 (4.12)	8x∅28.4 (1.12)	14.0 (30.87)
3"	241.3 (9.50)	38.1 (1.50)	190.5 (7.50)	127.0 (5.00)	8x∅25.4 (1.00)	13.1 (28.89)
4"	292.1 (11.50)	44.5 (1.75)	235.0 (9.25)	157.2 (6.19)	8x∅31.8 (1.25)	26.9 (59.31)
5"	349.3 (13.8)	50.8 (2.00)	279.4 (11.0)	185.7 (7.31)	8x∅35.1 (1.38)	36.5 (80.48)
6"	381.0 (15.00)	55.6 (2.19)	317.5 (12.5)	215.9 (8.50)	12x∅31.8 (1.25)	47.4 (104.5)
8"	469.9 (18.50)	63.5 (2.50)	393.7 (15.5)	269.7 (10.6)	12x∅38.1 (1.50)	82.5 (181.9)
10"	546.1 (21.50)	69.9 (2.75)	469.9 (18.5)	323.8 (12.7)	16x∅38.1 (1.50)	122 (269.0)

Class 1500

NPS (Nominal pipe size)	D	b	K	d	L	approx. kg (lbs)
1"	149.4 (5.88)	28.4 (1.12)	101.6 (4.00)	50.8 (2.00)	4x∅25.4 (1.00)	3.57 (7.87)
1¼"	158.8 (6.25)	28.4 (1.12)	111.3 (4.38)	63.5 (2.50)	4x∅25.4 (1.00)	4.14 (9.13)
1½"	177.8 (7.00)	31.8 (1.25)	124.0 (4.88)	73.2 (2.88)	4x∅28.4 (1.12)	5.75 (12.68)
2"	215.9 (8.50)	38.1 (1.50)	165.1 (6.50)	91.9 (3.62)	8x∅25.4 (1.00)	10.1 (22.27)
2½"	244.4 (9.62)	41.1 (1.62)	190.5 (7.50)	104.6 (4.12)	8x∅28.4 (1.12)	14.0 (30.87)
3"	266.7 (10.50)	47.8 (1.88)	203.2 (8.00)	127.0 (5.00)	8x∅31.8 (1.25)	19.1 (42.12)
4"	311.2 (12.3)	53.8 (2.12)	241.3 (9.50)	157.2 (6.19)	8x∅35.1 (1.38)	29.9 (65.93)
5"	374.7 (14.8)	73.2 (2.88)	292.1 (11.5)	185.7 (7.31)	8x∅41.1 (1.62)	58.4 (128.8)
6"	393.7 (15.50)	82.6 (3.25)	317.5 (12.5)	215.9 (8.50)	12x∅38.1 (1.50)	71.8 (158.3)
8"	482.6 (19.00)	91.9 (3.62)	393.7 (15.5)	269.7 (10.6)	12x∅44.5 (1.75)	122 (269.0)
10"	584.2 (23.00)	108.0 (4.25)	482.6 (19.0)	323.8 (12.7)	12x∅50.8 (2.00)	210 (463.0)

JIS flanges (B 2220)

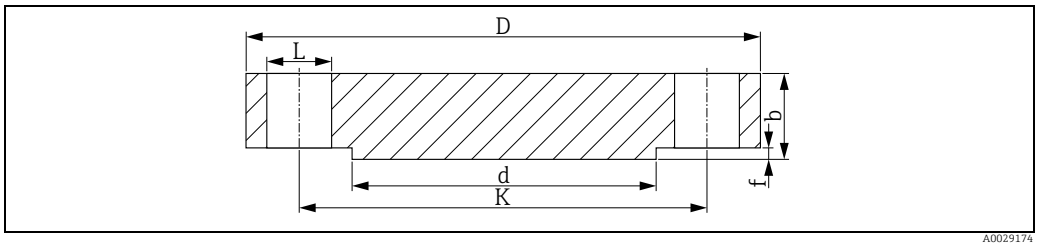

(Raised face RF)

L Diameter of holes
d Raised face diameter
K Diameter of hole circle
D Flange diameter
b Total flange thickness
f Raised face height (general 2 mm (0.08 in))

Note!
Surface finish of the gasket faces Ra ≤ 3.2 to 6.3 µm (126 to 248 µin).

10 K

In following tables, the unit of measurement are indicated in mm (in) unless otherwise noted.

DN	D	b	K	d	L
25	125 (4.92)	14 (0.55)	90 (3.54)	67 (2.64)	4x∅19 (0.75)
32	135 (5.31)	16 (0.63)	100 (3.94)	76 (2.99)	4x∅19 (0.75)
40	140 (5.51)	16 (0.63)	105 (4.13)	81 (3.19)	4x∅19 (0.75)
50	155 (6.10)	16 (0.63)	120 (4.72)	96 (3.78)	4x∅19 (0.75)
65	175 (6.89)	18 (0.71)	140 (5.51)	116 (4.57)	4x∅19 (0.75)
80	185 (7.28)	18 (0.71)	150 (5.91)	126 (4.96)	8x∅19 (0.75)
100	210 (8.27)	18 (0.71)	175 (6.89)	151 (5.94)	8x∅19 (0.75)
125	250 (9.84)	20 (0.79)	210 (8.27)	182 (7.17)	8x∅23 (0.91)
150	280 (11.0)	22 (0.87)	240 (9.45)	212 (8.35)	8x∅23 (0.91)
200	330 (13.0)	22 (0.87)	290 (11.4)	262 (10.3)	12x∅23 (0.91)
250	400 (15.7)	24 (0.94)	355 (14.0)	324 (12.8)	12x∅25 (0.98)
300	445 (17.5)	24 (0.94)	400 (15.7)	368 (14.5)	16x∅25 (0.98)

20 K

DN	D	b	K	d	L
25	125 (4.92)	16 (0.63)	90 (3.54)	67 (2.64)	4x∅19 (0.75)
32	135 (5.31)	18 (0.71)	100 (3.94)	76 (2.99)	4x∅19 (0.75)
40	140 (5.51)	18 (0.71)	105 (4.13)	81 (3.19)	4x∅19 (0.75)
50	155 (6.10)	18 (0.71)	120 (4.72)	96 (3.78)	8x∅19 (0.75)
65	175 (6.89)	20 (0.79)	140 (5.51)	116 (4.57)	8x∅19 (0.75)
80	200 (7.87)	22 (0.87)	160 (6.30)	132 (5.20)	8x∅23 (0.91)
100	225 (8.86)	24 (0.94)	185 (7.28)	160 (6.30)	8x∅23 (0.91)
125	270 (10.6)	26 (1.02)	225 (8.86)	195 (7.68)	8x∅25 (0.98)
150	305 (12.0)	28 (1.10)	260 (10.2)	230 (9.06)	12x∅25 (0.98)
200	350 (13.8)	30 (1.18)	305 (12.0)	275 (10.8)	12x∅25 (0.98)
250	430 (16.9)	34 (1.34)	380 (15.0)	345 (13.6)	12x∅27 (1.06)
300	480 (18.9)	36 (1.42)	430 (16.9)	395 (15.6)	16x∅27 (1.06)

63 K

DN	D	b	K	d	L
25	140 (5.51)	27 (1.06)	100 (3.94)	70 (2.76)	4x∅23 (0.91)
32	150 (5.91)	30 (1.18)	110 (4.33)	80 (3.15)	4x∅23 (0.91)
40	175 (6.89)	32 (1.26)	130 (5.12)	90 (3.54)	4x∅25 (0.98)
50	185 (7.28)	34 (1.34)	145 (5.71)	105 (4.13)	8x∅23 (0.91)
65	220 (8.66)	38 (1.50)	175 (6.89)	130 (5.12)	8x∅25 (0.98)
80	230 (9.06)	40 (1.57)	185 (7.28)	140 (5.51)	8x∅25 (0.98)
100	270 (10.6)	44 (1.73)	220 (8.66)	165 (6.50)	8x∅27 (1.06)
125	325 (12.8)	50 (1.97)	265 (10.4)	200 (7.87)	8x∅33 (1.30)
150	365 (14.4)	54 (2.13)	305 (12.0)	240 (9.45)	12x∅33 (1.30)
200	425 (16.7)	60 (2.36)	360 (14.2)	290 (11.4)	12x∅33 (1.30)
250	500 (19.7)	68 (2.68)	430 (16.9)	355 (14.0)	12x∅39 (1.54)
300	560 (22.0)	77 (3.03)	485 (19.1)	410 (16.1)	16x∅39 (1.54)

Pressure-temperature dependencies

EN flanges[1)]

Temperature range	Nominal pressure bar (psi)				
	PN16	PN25	PN40	PN63	PN100
–10 °C … +50 °C (+14 °F … +122 °F)	16.0 (232)	25.0 (362)	40.0 (580)	63.0 (913)	100.0 (1450)
50 °C (122 °F)	15.5 (225)	24.3 (352)	38.9 (564)	61.3 (889)	97.3 (1411)
100 °C (212 °F)	15.1 (219)	23.6 (342)	37.9 (550)	59.7 (866)	94.7 (1373)
150 °C (302 °F)	13.7 (199)	21.5 (312)	34.4 (499)	54.3 (787)	86.1 (1248)
200 °C (392 °F)	12.7 (184)	19.8 (287)	31.8 (461)	50.1 (726)	79.5 (1153)
250 °C (482 °F)	11.9 (173)	18.6 (270)	29.9 (434)	47.1 (683)	74.7 (1083)
300 °C (572 °F)	11.0 (159)	17.2 (249)	27.6 (400)	43.5 (631)	69.0 (1000)
350 °C (662 °F)	10.5 (152)	16.5 (239)	26.4 (383)	41.7 (605)	66.1 (958)
400 °C (752 °F)	10.2 (148)	16.0 (232)	25.7 (373)	40.1 (580)	64.2 (931)

ASME flanges[1)]

Temperature range	Nominal pressure bar (psi)				
	Class 150	Class 300	Class 600	Class 900	Class 1500
–29 °C … +38 °C (–20 °F … +100 °F)	19.0 (275)	49.6 (719)	99.3 (1440)	148.9 (2159)	248.2 (3599)
50 °C (122 °F)	18.4 (267)	48.1 (697)	96.2 (1395)	144.3 (2092)	240.6 (3489)
100 °C (212 °F)	16.2 (235)	42.2 (612)	84.4 (1224)	126.6 (1836)	211.0 (3059)
150 °C (302 °F)	14.8 (215)	38.5 (558)	77.0 (1116)	115.5 (1675)	192.5 (2791)
200 °C (392 °F)	13.7 (199)	35.7 (518)	71.3 (1034)	107.0 (1551)	178.3 (2588)
250 °C (482 °F)	12.1 (175)	33.4 (484)	66.8 (969)	100.1 (1451)	166.9 (2420)
300 °C (572 °F)	10.2 (148)	31.6 (458)	63.2 (916)	94.9 (1376)	158.1 (2292)
325 °C (617 °F)	9.3 (135)	30.9 (448)	61.8 (896)	92.7 (1344)	154.4 (2239)
350 °C (662 °F)	8.4 (122)	30.3 (439)	60.7 (880)	91.0 (1319)	151.6 (2189)
375 °C (707 °F)	7.4 (107)	29.9 (434)	59.8 (867)	89.6 (1299)	149.4 (2166)
400 °C (752 °F)	6.5 (94)	29.4 (426)	58.9 (854)	88.3 (1280)	147.2 (2134)

JIS flanges[1)]

Temperature range	Nominal pressure bar (psi)			
	10 K	20 K		
	for all flanges	to DN 125	from DN 150 up to DN 250	DN 300
up to 120 °C (248 °F)	14 (203.0)	34 (493.0)	20 (290.0)	20 (290.0)
220 °C (428 °F)	12 (174.0)	31 (449.5)	20 (290.0)	–
300 °C (572 °F)	10 (145.0)	29 (420.5)	19 (275.5)	–
350 °C (662 °F)	–	26 (377.0)	17 (246.5)	–
400 °C (752 °F)	–	23 (333.5)	17 (246.5)	–
425 °C (797 °F)	–	20 (290.0)	17 (246.5)	–

1) With regard to their stability-temperature property, the materials 1.4435 and 1.4404 are grouped in DIN EN 1092-1 table 18 under 13E0 and in JIS B2220 table 5 under 023b. The ASME flanges are dual rated flanges (316/316L) and grouped in table 2-2.2 according to ASME B16.5.

Slip-on flange FAU80

The sensors (FDU91F, FDU80F, FDU81F) can be flush mounted using a FAU80 slip-on flange. Flanges in polypropylene (PP) should only used with pressures up to 1.5 bar_{abs} (22 psi) flanges in 316L also above.

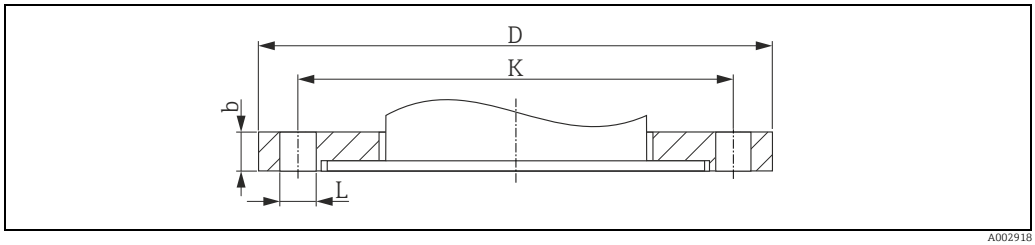

Details to dimension "Mechanical Construction" → ä 69

FAU80 Version slip-on flange

Order information

010		Process Connection
	AA	3" 150 lbs FF, flange ANSI B16.5
	AH	4" 150 lbs FF, flange ANSI B16.5
	CA	DN 80 PN16 A, flange EN1092-1
	CH	DN 100 PN16 A, flange EN1092-1 (
	KA	10K 80A FF, flange JIS B2220
	KH	10K 100A FF, flange JIS B2220
	YY	Special version, to be specified

020		Flange Material
	J	316L
	P	PPs, max. 1.5 bar abs
	Y	Special version, to be specified

The versions entered make up the order code:

	010	020
FAU80 -		

Screw in flange FAX50

The screw in flange is an universal flange. On the basis of dimensions min./max. it can be used for all three standards (DIN - ASME - JIS).

FAX50 universal flange DIN-ASME-JIS

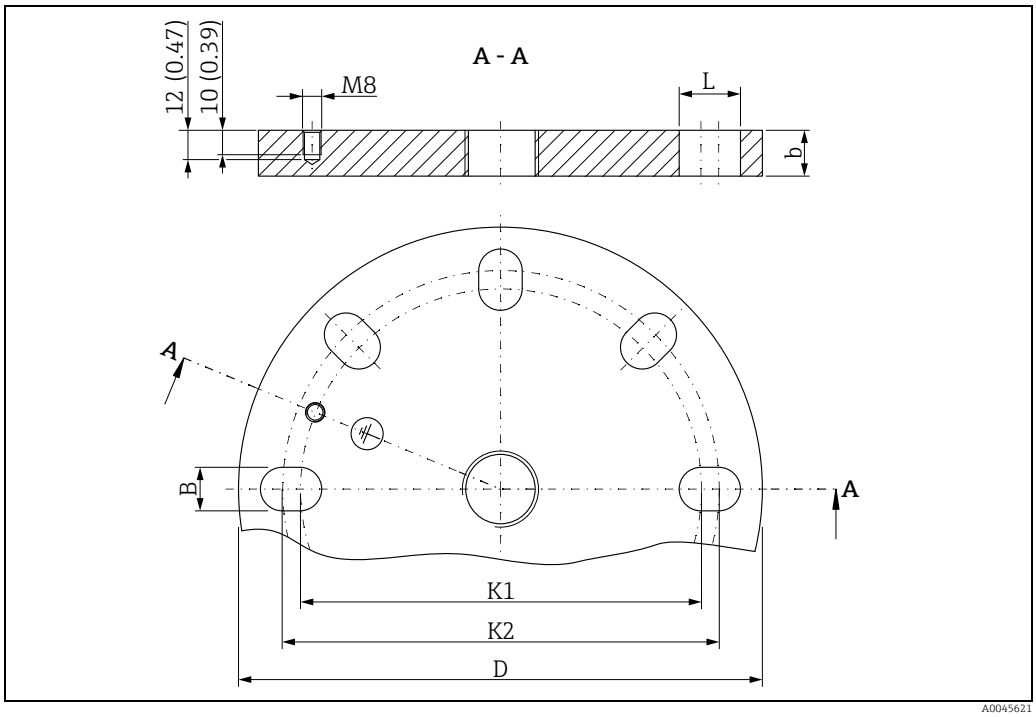

L Diameter of holes
K1, K2 Diameter of hole circle
D Flange diameter
b Total flange thickness
B Slotted hole (width)

Thread M8, 10 mm + 2 mm (0.39 in + 0.08 in) deep, centered between 2 holes
Is made on all flanges, incl. UNI flanges, out of steel or 316L.

G ¾, NPT ¾

In following tables, the unit of measurement are indicated in mm (in) unless otherwise noted.

DN	D	b	L	K1	K2	approx. kg (lbs)		
						PP	PVDF	316L
50	165 (6.50)	20 (0.79)	4xØ19 (0.75)	120 (4.72)	125 (4.92)	–	–	3.11 (6.86)
80	200 (7.87)		8xØ19 (0.75)	150 (5.91)	160 (6.30)	–	–	4.37 (9.64)
100	228.6 (9.0)		8xØ19 (0.75)	175 (6.89)	190.5 (7.5)	–	–	5.79 (12.77)

G 1, NPT 1

DN	D	b	L	K1	K2	approx. kg (lbs)		
						PP	PVDF	316L
80	200 (7.87)	20 (0.79)	8xØ19 (0.75)	150 (5.91)	160 (6.30)	0.50 (1.10)	0.97 (2.14)	4.34 (9.57)
100	228.6 (9.0)		8xØ19 (0.75)	175 (6.89)	190.5 (7.5)	0.66 (1.46)	1.29 (2.84)	5.75 (12.68)
150	285 (11.2)		8xØ23 (0.91)	240 (9.45)	241.3 (9.5)	1.09 (2.40)	2.12 (4.67)	9.44 (20.82)
200 [1)]	340 (13.4)		12xØ23 (0.91)	290 (11.4)	295 (11.6)	1.53 (3.37)	–	–
250	406.4 (16.0)		12xØ26 (1.02)	355 (14.0)	362 (14.3)	2.20 (4.85)	–	–

1) Only for DIN und JIS!

Exception G 1

NPS (Nominal pipe size)	D	b	L	K1	K2	approx. kg (lbs)		
ASME						PP	PVDF	316L
8"	342.9 (13.5)	20 (0.79)	8xØ22.5 (0.89)	298.5 (11.8)	298.5 (11.8)	1.61 (3.55)	–	–

G 1½, NPT 1½

DN	D	b	L	K1	K2	approx. kg (lbs)		
						PP	PVDF	316L
50	165 (6.50)	20 (0.79)	4xØ19 (0.75)	120 (4.72)	125 (4.92)	0.34 (0.75)	0.67 (1.48)	2.97 (6.55)
80	200 (7.87)		8xØ19 (0.75)	150 (5.91)	160 (6.30)	0.49 (1.08)	0.95 (2.09)	4.24 (9.35)
100	228.6 (9.0)		8xØ19 (0.75)	175 (6.89)	190.5 (7.5)	0.65 (1.43)	1.27 (2.80)	5.65 (12.46)
150	285 (11.2)		8xØ23 (0.91)	240 (9.45)	241.3 (9.5)	1.08 (2.38)	2.09 (4.61)	9.34 (20.59)

G 2, NPT 2

DN	D	b	L	K1	K2	approx. kg (lbs)		
						PP	PVDF	316L
50	165 (6.50)	20 (0.79)	4xØ19 (0.75)	120 (4.72)	125 (4.92)	0.33 (0.73)	0.63 (1.39)	2.83 (6.24)
80	200 (7.87)		8xØ19 (0.75)	150 (5.91)	160 (6.30)	0.47 (1.04)	0.92 (2.03)	4.10 (9.04)
100	228.6 (9.0)		8xØ19 (0.75)	175 (6.89)	190.5 (7.5)	0.64 (1.41)	1.24 (2.73)	5.51 (12.15)
150	285 (11.2)		8xØ23 (0.91)	240 (9.45)	241.3 (9.5)	1.06 (2.34)	2.06 (4.54)	9.20 (20.29)

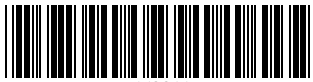

www.addresses.endress.com

Endress+Hauser

People for Process Automation