Pushbuttons and Indicating Lights

Pushbutton—Non-Illuminated



Pushbutton—Illuminated



Indicating Light



Emergency Stop—Non-Illuminated



Emergency Stop—Illuminated



47.4 M22 Modular Pushbuttons

Product Overview 2
Product Description 4
Product Selection
- Pushbuttons 5
- Illuminated Pushbuttons 15
- Indicating Lights 24
- Emergency Stops 26
- Illuminated Emergency Stops 28
- Selector Switches 30
- Illuminated Selector Switches 35
- Key Operated Selector Switches 38
- Mushroom Head Pushbuttons 44
- Double Pushbuttons 49
- Four-Way Pushbuttons 53
- Joysticks 54
- Potentiometers 55
- Acoustic Devices 55
- Through-the-Door Operators 56
- Bulkhead Interfaces. 56
- ASi Adapter Modules 56
- Palm Switches 57
- Assembled Control Stations 58

Accessories 59
Coding Adapter Guide 66
Technical Data and Specifications 67
Dimensions 71
Symbols Library 77
Catalog Number Index 85

Note: Supplement to Publication No. CA08102001E—Tab 47.

M22 Modular Pushbutton Overview

Pushbuttons

	Description	Operator	Page(s)
	Non-Illuminated, Flush	Momentary	**5–7**
		Maintained	**8**, **9**
	Non-Illuminated, Extended	Momentary	**10**, **11**
		Maintained	**12**, **13**
	Illuminated, Flush	Momentary	**15–17**
		Maintained	**18**, **19**
	Illuminated, Extended	Momentary	**20, 21**
		Maintained	**22, 23**

Indicating Lights

	Description	Operator	Page(s)
	Indicating Lights	—	**24**, **25**

Emergency Stops

	Description	Operator	Page(s)
	Non-Illuminated	—	**26**, **27**
	Illuminated	—	**28, 29**

Selector Switches

	Description	Operator	Page(s)
	Non-Illuminated, Knob Type	—	**30**, **31**
	Non-Illuminated, Rotary Type	—	**32**, **33**
	Illuminated	—	**35–37**
	Key-Operated	—	**38–43**

Mushroom Head Pushbuttons

	Description	Operator	Page(s)
	Non-Illuminated	Momentary	**44**, **45**
		Maintained	**46**, **47**

Double Pushbuttons

	Description	Operator	Page(s)
	Extended Pushbuttons and Center Light	Momentary	**49**
	Flush Top and Center Light, Extended Bottom	Momentary	**50**
	Flush Pushbuttons and Center Light	—	**51**

M22 Modular Pushbutton Overview

Four-Way Pushbuttons

	Description	Operator	Page(s)
	Non-Interlocked	Momentary	**53**
	Interlocked	Momentary	**53**

Joysticks

	Description	Operator	Page(s)
	Joysticks	—	**54**

Potentiometers

	Description	Operator	Page(s)
	Potentiometers	—	**55**

Acoustic Devices

	Description	Operator	Page(s)
	Acoustic Devices	—	**55**

Through-the-Door Operators

	Description	Operator	Page(s)
	Through-the-Door Operators	—	**56**

Bulkhead Interfaces

	Description	Operator	Page(s)
	Bulkhead Interfaces	—	**56**

ASi Adapter Modules

	Description	Operator	Page(s)
	ASi Adapter Modules	—	**56**

Palm Switches

	Description	Operator	Page(s)
	Palm Switches	—	**57**

Assembled Control Stations

	Description	Operator	Page(s)
	Assembled Control Stations	—	**58**

M22 Pushbuttons



Product Description

Eaton's M22 industrial heavy-duty pushbutton line offers a wide array of functional, attractive and ergonomically designed illuminated and non-illuminated pushbuttons, selector switches, push-pulls, alternate action and twist-to-release operators. The complete illuminated line is only offered in LED light units to ensure high-quality brightness and up to 100,000 hours of LED illumination. M22 operators are available with either a silver or a black colored bezel. The space-saving modular construction of the M22 line makes on-the-job assembly fast and simplifies the stocking of both components and complete devices.

Highly Modular and Versatile Line

- Field convertible functions (pushbuttons and selector switches), maintained to momentary
- Customizable laser engraving capabilities

LED Indicators

- 100,000 hours of life in high-vibration environments
- Lenses specifically designed for LED illumination

Rugged Design

- Most pushbutton operators and contact blocks exceed 5 million mechanical operations
- All components have IP66 rating, and some carry IP67 and IP69K for washdown environment; see **Page 67** for further technical data

Innovative Technologies

- ASi communicating devices
- Palm switches

Features

- Field convertible pushbuttons and mushroom operators from maintained to momentary status
- Field convertible selector switches from momentary to maintained operation and vice versa
- LED offering only for all illuminated operators
- Laser engraved pushbuttons, lenses and enclosures
- Heavy-duty construction with a minimum of IP66 and UL NEMA® type 4X / 13 on front of panel operators. Many operators even carry IP67 and IP69K, for the toughest applications
- Silver or black colored nylon bezels
- Snap-lock contact blocks and light units for front or base mounting
- Notched hole mounting with anti-rotation tab and central nut mounting on each operator
- Over 5 million mechanical operations and 1.6 million electrical (reference specification sheet)
- Direct opening action normally closed contacts
- Unique and innovative offerings, such as four-way pushbuttons and USB/ RJ45 bulkhead interfaces
- Screw or spring-cage terminals

Benefits

- Modular construction makes assembly fast and simplifies stocking of components and complete devices
- Field convertibility of operator status for pushbuttons and selector switches helps distributors and customers reduce inventory and increase functionality
- LED offering only for improved brightness quality and up to 100,000 hours of operation
- Plastic construction is corrosion resistant. Operators are designed for rugged environments, ideal for washdown applications (reference each operator's IP ratings and IEC/EN 60529 for ingress protection definition)
- Anti-rotation tab saves installation time and prevents operator rotation
- High mechanical and electrical life allows for use in tough and challenging applications
- Laser inscription capabilities allow for high-quality, wear-resistant markings
- All normally closed (NC) contacts are Direct Opening Action, i.e., NC contacts are physically forced open by direct linkage with the pushbutton operator in the unlikely event of contact weld
- Some M22 operators are capable of communication via ASi protocol
- M22 offers USB and RJ45 connections

Catalog Number Selection

Non-Illuminated Pushbuttons

M22 – D – S – X0 – K10

Bezel
- **M22** = Silver
- **M22S** = Black

Operator Type
- **D** = Flush momentary
- **DH** = Extended momentary
- **DG** = Flush with guard ①
- **DR** = Flush maintained
- **DGH** = Extended momentary with guard ①
- **DRH** = Extended maintained

① Silver bezel only.

Button Plate Color
- **G** = Green
- **Y** = Yellow
- **B** = Blue
- **S** = Black
- **R** = Red
- **W** = White

Inscription
- **GB0** = STOP
- **GB1** = START
- **GB2** = CLOSE
- **GB3** = UP
- **GB4** = DOWN
- **GB5** = OFF
- **GB6** = ON
- **GB14** = RESET
- **GB15** = FORWARD
- **GB16** = REVERSE
- **X0** = ◎
- **X1** = ①
- **X4** = ⊕
- **X5** = ⊖
- **X6** = Ⓡ
- **X7** = ①
- **X8** = ⊘

Contact Blocks
- **K10** = 1NO
- **K01** = 1NC
- **K20** = 2NO
- **K02** = 2NC
- **K11** = 1NO-1NC
- **K30** = 3NO
- **K03** = 3NC
- **K21** = 2NO-1NC
- **K12** = 1NO-2NC

Note: Catalog Number Selection is for illustrative purposes only and not to be used to create new catalog numbers.

Product Selection

Non-Illuminated Pushbuttons, Flush, Momentary

Complete Devices

	Bezel	Button Color	Contact Block Configuration	Catalog Number	Price U.S. $ ①
M22-D-G-K10 	Silver	Black	NO	**M22-D-S-K10**	17.50
			NC	**M22-D-S-K01**	17.50
			2NO	**M22-D-S-K20**	27.50
			2NC	**M22-D-S-K02**	27.50
			1NO-1NC	**M22-D-S-K11**	27.50
		Red	NO	**M22-D-R-K10**	17.50
			NC	**M22-D-R-K01**	17.50
			2NO	**M22-D-R-K20**	27.50
			2NC	**M22-D-R-K02**	27.50
			1NO-1NC	**M22-D-R-K11**	27.50
		Green	NO	**M22-D-G-K10**	17.50
			NC	**M22-D-G-K01**	17.50
			2NO	**M22-D-G-K20**	27.50
			2NC	**M22-D-G-K02**	27.50
			1NO-1NC	**M22-D-G-K11**	27.50
M22S-D-G-K10 	Black	Black	NO	**M22S-D-S-K10**	16.00
			NC	**M22S-D-S-K01**	16.00
			2NO	**M22S-D-S-K20**	26.00
			2NC	**M22S-D-S-K02**	26.00
			1NO-1NC	**M22S-D-S-K11**	26.00
		Red	NO	**M22S-D-R-K10**	16.00
			NC	**M22S-D-R-K01**	16.00
			2NO	**M22S-D-R-K20**	26.00
			2NC	**M22S-D-R-K02**	26.00
			1NO-1NC	**M22S-D-R-K11**	26.00
		Green	NO	**M22S-D-G-K10**	16.00
			NC	**M22S-D-G-K01**	16.00
			2NO	**M22S-D-G-K20**	26.00
			2NC	**M22S-D-G-K02**	26.00
			1NO-1NC	**M22S-D-G-K11**	26.00

Note

① Discount Symbol: **1CD1**.

Non-Illuminated Pushbuttons, Flush, Momentary

Operators Only ①

	Bezel	Button Color	Inscription	Catalog Number	Price U.S. $ ④
M22-D-G 	Silver	Black	—	**M22-D-S**	7.50
		Red	—	**M22-D-R**	7.50
			STOP	**M22-D-R-GB0**	8.50
			◎	**M22-D-R-X0**	8.50
		Green	—	**M22-D-G**	7.50
			START	**M22-D-G-GB1**	8.50
			①	**M22-D-G-X1**	8.50
		White	—	**M22-D-W**	7.50
		Blue	—	**M22-D-B**	7.50
		Yellow	—	**M22-D-Y**	7.50
		—	—	**M22-D-X-SRG** ②	9.00
			—	**M22-D-X-SWRGYB** ③	11.50
M22S-D-G 	Black	Black	—	**M22S-D-S**	6.00
		Red	—	**M22S-D-R**	6.00
			STOP	**M22S-D-R-GB0**	7.00
			◎	**M22S-D-R-X0**	7.00
		Green	—	**M22S-D-G**	6.00
			START	**M22S-D-G-GB1**	7.00
			①	**M22S-D-G-X1**	7.00
		White	—	**M22S-D-W**	6.00
		Blue	—	**M22S-D-B**	6.00
		Yellow	—	**M22S-D-Y**	6.00
		—	—	**M22S-D-X-SRG** ②	7.50
			—	**M22S-D-X-SWRGYB** ③	10.00
M22-DG-G 	Silver Guarded	Black	—	**M22-DG-S**	15.00
		Red	—	**M22-DG-R**	15.00
		Green	—	**M22-DG-G**	15.00
		White	—	**M22-DG-W**	15.00
		Blue	—	**M22-DG-B**	15.00
		Yellow	—	**M22-DG-Y**	15.00
		—	—	**M22-DG-X-SRG** ②	16.50
			—	**M22-DG-X-SWRGYB** ③	19.00

Notes

① Includes contact block mounting adapter.
② Buttonless operator comes with 3 color buttons (Black, Red, Green).
③ Buttonless operator comes with all 6 color buttons (Black, White, Red, Green, Yellow, Blue).
④ Discount Symbol: **1CD1**.

Non-Illuminated Pushbuttons, Flush, Momentary

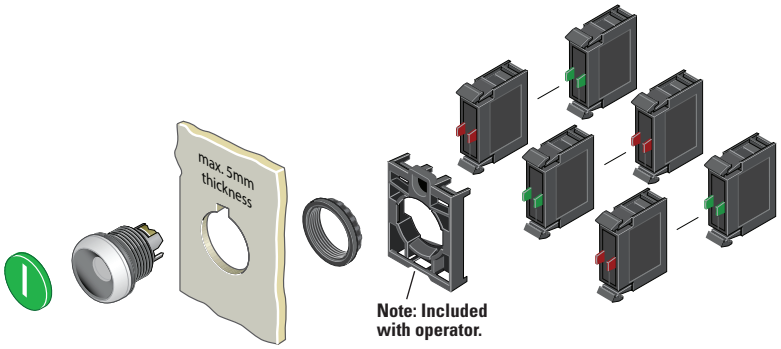

Components

Button Plates ①

M22-XD-G



Color	Inscription	Catalog Number	Price U.S. $ ④
Black	—	**M22-XD-S** ②	1.00
	Custom	**M22-XD-S-ETCH** ③	2.00
	STOP	**M22-XD-S-GB0**	2.00
	START	**M22-XD-S-GB1**	2.00
	CLOSE	**M22-XD-S-GB2**	2.00
	UP	**M22-XD-S-GB3**	2.00
	DOWN	**M22-XD-S-GB4**	2.00
	OFF	**M22-XD-S-GB5**	2.00
	ON	**M22-XD-S-GB6**	2.00
	TEST	**M22-XD-S-GB9**	2.00
	FORWARD	**M22-XD-S-GB15**	2.00
	REVERSE	**M22-XD-S-GB16**	2.00
	RAISE	**M22-XD-S-GB17**	2.00
	LOWER	**M22-XD-S-GB18**	2.00
	◎	**M22-XD-S-X0**	2.00
	①	**M22-XD-S-X1**	2.00
	⊕	**M22-XD-S-X4**	2.00
	⊖	**M22-XD-S-X5**	2.00
	↑	**M22-XD-S-X7**	2.00
Red	—	**M22-XD-R** ②	1.00
	Custom	**M22-XD-R-ETCH** ③	2.00
	STOP	**M22-XD-R-GB0**	2.00
	OFF	**M22-XD-R-GB5**	2.00
	◎	**M22-XD-R-X0**	2.00
Green	—	**M22-XD-G** ②	1.00
	Custom	**M22-XD-G-ETCH** ③	2.00
	START	**M22-XD-G-GB1**	2.00
	ON	**M22-XD-G-GB6**	2.00
	①	**M22-XD-G-X1**	2.00
Blue	—	**M22-XD-B** ②	1.00
	Custom	**M22-XD-B-ETCH** ③	2.00
	RESET	**M22-XD-B-GB14**	2.00
	Ⓡ	**M22-XD-B-X6**	2.00
White	—	**M22-XD-W** ②	1.00
	Custom	**M22-XD-W-ETCH** ③	2.00
	START	**M22-XD-W-GB1**	2.00
	①	**M22-XD-W-X1**	2.00
Yellow	—	**M22-XD-Y** ②	1.00
	Custom	**M22-XD-Y-ETCH** ③	2.00
Black, Red, Green	—	**M22-XD-SRG**	2.50
Black, White, Red, Green, Yellow, Blue	—	**M22-XD-SWRGYB**	5.00

Buttonless Operator

Bezel	Catalog Number	Price U.S. $ ④
Silver	**M22-D-X**	6.50
Black	**M22S-D-X**	5.00
Silver Guarded	**M22-DG-X**	14.00

M22-D-X



M22S-D-X



M22-DG-X



Contact Blocks ①

Terminal Type	Contact Configuration	Catalog Number	Price U.S. $ ④
Screw	NO	**M22-K10**	10.00
	NO, Early-Make	**M22-K10P**	11.00
	NC	**M22-K01**	10.00
	NC, Late-Break	**M22-K01D**	11.00
Spring-Cage	NO	**M22-CK10**	13.00
	NC	**M22-CK01**	13.00
	NC, Late-Break	**M22-CK01D**	11.00
	2NO	**M22-CK20**	23.00
	2NC	**M22-CK02**	23.00
	NO-NC	**M22-CK11**	23.00

M22-K10



Notes

① For complete listing of available button plates and contact blocks, see Accessories, **Pages 59–64**.
② Minimum order quantity of (10).
③ When ordering, specify inscription per catalog number suffix from the symbols library (see **Pages 77–84**) into the Order Notes. For example, M22-XD-S-ETCH; Order Notes: Mark with symbol X91, Line item #_.
④ Discount Symbol: **1CD1**.

Non-Illuminated Pushbuttons, Flush, Maintained ①

Operators Only ②

M22-DR-S



Bezel	Button Color	Catalog Number	Price U.S. $ ⑤
Silver	Black	**M22-DR-S**	10.00
	Red	**M22-DR-R**	10.00
	Green	**M22-DR-G**	10.00
	White	**M22-DR-W**	10.00
	Blue	**M22-DR-B**	10.00
	Yellow	**M22-DR-Y**	10.00
	③	**M22-DR-X-SRG**	11.50
	④	**M22-DR-X-SWRGYB**	14.00

M22S-DR-S



Black	Black	**M22S-DR-S**	8.50
	Red	**M22S-DR-R**	8.50
	Green	**M22S-DR-G**	8.50
	White	**M22S-DR-W**	8.50
	Blue	**M22S-DR-B**	8.50
	Yellow	**M22S-DR-Y**	8.50
	③	**M22S-DR-X-SRG**	10.00
	④	**M22S-DR-X-SWRGYB**	12.50

Notes

① Maintained pushbuttons can be converted in the field to momentary operation by switching the locking ring, which is accessible through the side of the operator body.
② Includes contact block mounting adapter.
③ Buttonless operator comes with 3 color buttons (Black, Red, Green).
④ Buttonless operator comes with all 6 color buttons (Black, White, Red, Green, Yellow, Blue).
⑤ Discount Symbol: **1CD1**.

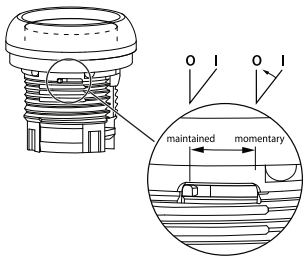

⊖ = Positively driven contact.

Note: This pilot device features a selectable function switch that enables the device to be set to either maintained or momentary operation.

Non-Illuminated Pushbuttons, Flush, Maintained ①

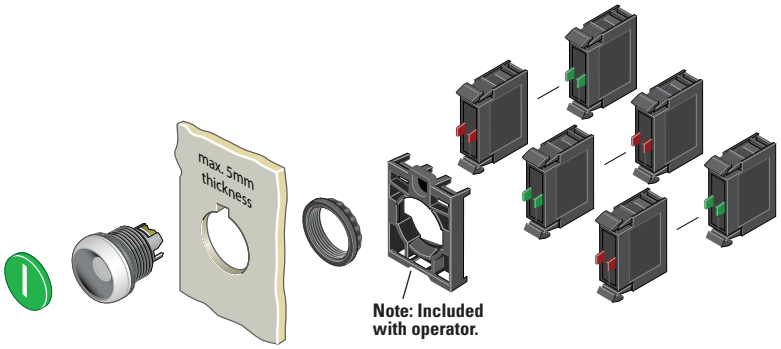

Components

Button Plates ②

M22-XD-S



Color	Inscription	Catalog Number	Price U.S. $ ⑤
Black	—	**M22-XD-S** ③	1.00
	Custom	**M22-XD-S-ETCH** ④	2.00
	STOP	**M22-XD-S-GB0**	2.00
	START	**M22-XD-S-GB1**	2.00
	CLOSE	**M22-XD-S-GB2**	2.00
	UP	**M22-XD-S-GB3**	2.00
	DOWN	**M22-XD-S-GB4**	2.00
	OFF	**M22-XD-S-GB5**	2.00
	ON	**M22-XD-S-GB6**	2.00
	TEST	**M22-XD-S-GB9**	2.00
	FORWARD	**M22-XD-S-GB15**	2.00
	REVERSE	**M22-XD-S-GB16**	2.00
	RAISE	**M22-XD-S-GB17**	2.00
	LOWER	**M22-XD-S-GB18**	2.00
	◎	**M22-XD-S-X0**	2.00
	①	**M22-XD-S-X1**	2.00
	⊕	**M22-XD-S-X4**	2.00
	⊖	**M22-XD-S-X5**	2.00
	ⓣ	**M22-XD-S-X7**	2.00
Red	—	**M22-XD-R** ③	1.00
	Custom	**M22-XD-R-ETCH** ④	2.00
	STOP	**M22-XD-R-GB0**	2.00
	OFF	**M22-XD-R-GB5**	2.00
	◎	**M22-XD-R-X0**	2.00
Green	—	**M22-XD-G** ③	1.00
	Custom	**M22-XD-G-ETCH** ④	2.00
	START	**M22-XD-G-GB1**	2.00
	ON	**M22-XD-G-GB6**	2.00
	①	**M22-XD-G-X1**	2.00
Blue	—	**M22-XD-B** ③	1.00
	Custom	**M22-XD-B-ETCH** ④	2.00
	RESET	**M22-XD-B-GB14**	2.00
	Ⓡ	**M22-XD-B-X6**	2.00
White	—	**M22-XD-W** ③	1.00
	Custom	**M22-XD-W-ETCH** ④	2.00
	START	**M22-XD-W-GB1**	2.00
	①	**M22-XD-W-X1**	2.00
Yellow	—	**M22-XD-Y** ③	1.00
	Custom	**M22-XD-Y-ETCH** ④	2.00
Black, Red, Green	—	**M22-XD-SRG**	2.50
Black, White, Red, Green, Yellow, Blue	—	**M22-XD-SWRGYB**	5.00

Buttonless Operator

M22-DR-X



M22S-DR-X



Bezel	Catalog Number	Price U.S. $ ⑤
Silver	**M22-DR-X**	9.00
Black	**M22S-DR-X**	7.50

Contact Blocks ②

M22-K10



Terminal Type	Contact Configuration	Catalog Number	Price U.S. $ ⑤
Screw	NO	**M22-K10**	10.00
	NO, Early-Make	**M22-K10P**	11.00
	NC	**M22-K01**	10.00
	NC, Late-Break	**M22-K01D**	11.00
Spring-Cage	NO	**M22-CK10**	13.00
	NC	**M22-CK01**	13.00
	NC, Late-Break	**M22-CK01D**	11.00
	2NO	**M22-CK20**	23.00
	2NC	**M22-CK02**	23.00
	NO-NC	**M22-CK11**	23.00

Notes

① Maintained pushbuttons can be converted in the field to momentary operation by switching the locking ring, which is accessible through the side of the operator body.

② For complete listing of available button plates and contact blocks, see Accessories, **Pages 59–64**.

③ Minimum order quantity of (10).

④ When ordering, specify inscription per catalog number suffix from the symbols library (see **Pages 77–84**) into the Order Notes. For example, M22-XD-S-ETCH; Order Notes: Mark with symbol X91, Line item #_.

⑤ Discount Symbol: **1CD1**.

Non-Illuminated Pushbuttons, Extended, Momentary

Complete Devices

	Bezel	Button Color	Contact Block Configuration	Catalog Number	Price U.S. $ ④
M22-DH-R-K10 	Silver	Red	NO	**M22-DH-R-K10**	18.50
			NC	**M22-DH-R-K01**	18.50
			2NO	**M22-DH-R-K20**	28.50
			2NC	**M22-DH-R-K02**	28.50
			1NO-1NC	**M22-DH-R-K11**	28.50
M22S-DH-R-K10 	Black	Red	NO	**M22S-DH-R-K10**	17.00
			NC	**M22S-DH-R-K01**	17.00
			2NO	**M22S-DH-R-K20**	27.00
			2NC	**M22S-DH-R-K02**	27.00
			1NO-1NC	**M22S-DH-R-K11**	27.00
M22-DGH-R-K10 	Silver Guarded	Red	NO	**M22-DGH-R-K10**	26.00
			NC	**M22-DGH-R-K01**	26.00
			2NO	**M22-DGH-R-K20**	36.00
			2NC	**M22-DGH-R-K02**	36.00
			1NO-1NC	**M22-DGH-R-K11**	36.00

Operators Only ①

	Bezel	Button Color	Inscription	Catalog Number	Price U.S. $ ④
M22-DH-R 	Silver	Black	—	**M22-DH-S**	8.50
		Red	—	**M22-DH-R**	8.50
			STOP	**M22-DH-R-GB0**	9.50
			◎	**M22-DH-R-X0**	9.50
		Green	—	**M22-DH-G**	8.50
		White	—	**M22-DH-W**	8.50
		Blue	—	**M22-DH-B**	8.50
		Yellow	—	**M22-DH-Y**	8.50
		②	—	**M22-DH-X-SRG**	11.50
		③	—	**M22-DH-X-SWRGYB**	16.50
M22S-DH-R 	Black	Black	—	**M22S-DH-S**	7.00
		Red	—	**M22S-DH-R**	7.00
			STOP	**M22S-DH-R-GB0**	8.00
			◎	**M22S-DH-R-X0**	8.00
		Green	—	**M22S-DH-G**	7.00
		White	—	**M22S-DH-W**	7.00
		Blue	—	**M22S-DH-B**	7.00
		Yellow	—	**M22S-DH-Y**	7.00
		②	—	**M22S-DH-X-SRG**	10.00
		③	—	**M22S-DH-X-SWRGYB**	15.00
M22-DGH-R 	Silver Guarded	Black	—	**M22-DGH-S**	16.00
		Red	—	**M22-DGH-R**	16.00
			STOP	**M22-DGH-R-GB0**	17.00
			◎	**M22-DGH-R-X0**	17.00
		Green	—	**M22-DGH-G**	16.00
		White	—	**M22-DGH-W**	16.00
		Blue	—	**M22-DGH-B**	16.00
		Yellow	—	**M22-DGH-Y**	16.00

Notes

① Includes contact block mounting adapter.
② Buttonless operator comes with 3 color buttons (Black, Red, Green).
③ Buttonless operator comes with all 6 color buttons (Black, White, Red, Green, Yellow, Blue).
④ Discount Symbol: **1CD1**.

Non-Illuminated Pushbuttons, Extended, Momentary

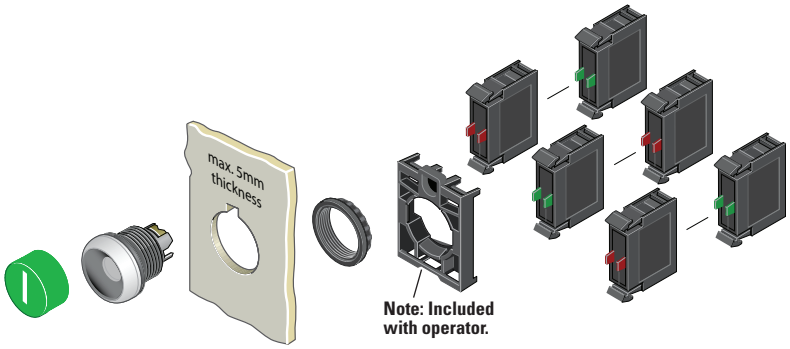

Components

Button Plates ①

M22-XDH-R



Color	Inscription	Catalog Number	Price U.S. $ ④
Black	—	**M22-XDH-S** ②	2.00
	Custom	**M22-XDH-S-ETCH** ③	3.00
	STOP	**M22-XDH-S-GB0**	3.00
	START	**M22-XDH-S-GB1**	3.00
	CLOSE	**M22-XDH-S-GB2**	3.00
	UP	**M22-XDH-S-GB3**	3.00
	DOWN	**M22-XDH-S-GB4**	3.00
	OFF	**M22-XDH-S-GB5**	3.00
	ON	**M22-XDH-S-GB6**	3.00
	TEST	**M22-XDH-S-GB9**	3.00
	FORWARD	**M22-XDH-S-GB15**	3.00
	REVERSE	**M22-XDH-S-GB16**	3.00
	RAISE	**M22-XDH-S-GB17**	3.00
	LOWER	**M22-XDH-S-GB18**	3.00
	◎	**M22-XDH-S-X0**	3.00
	①	**M22-XDH-S-X1**	3.00
	⊕	**M22-XDH-S-X4**	3.00
	⊖	**M22-XDH-S-X5**	3.00
	ⓘ	**M22-XDH-S-X7**	3.00
Red	—	**M22-XDH-R** ②	2.00
	Custom	**M22-XDH-R-ETCH** ③	3.00
	STOP	**M22-XDH-R-GB0**	3.00
	OFF	**M22-XDH-R-GB5**	3.00
	◎	**M22-XDH-R-X0**	3.00
Green	—	**M22-XDH-G** ②	2.00
	Custom	**M22-XDH-G-ETCH** ③	3.00
	START	**M22-XDH-G-GB1**	3.00
	ON	**M22-XDH-G-GB6**	3.00
	①	**M22-XDH-G-X1**	3.00
Blue	—	**M22-XDH-B** ②	2.00
	Custom	**M22-XDH-B-ETCH** ③	3.00
	RESET	**M22-XDH-B-GB14**	3.00
	Ⓡ	**M22-XDH-B-X6**	3.00
White	—	**M22-XDH-W** ②	2.00
	Custom	**M22-XDH-W-ETCH** ③	3.00
	START	**M22-XDH-W-GB1**	3.00
	①	**M22-XDH-W-X1**	3.00
Yellow	—	**M22-XDH-Y** ②	2.00
	Custom	**M22-XDH-Y-ETCH** ③	3.00
Black, Red, Green	—	**M22-XDH-SRG**	5.00
Black, White, Red, Green, Yellow, Blue	—	**M22-XDH-SWRGYB**	10.00

Buttonless Operator

	Bezel	Catalog Number	Price U.S. $ ④
M22-D-X 	Silver	**M22-D-X**	6.50
M22S-D-X 	Black	**M22S-D-X**	5.00
M22-DG-X 	Silver Guarded	**M22-DG-X**	14.00

Contact Blocks ①

M22-K10



Terminal Type	Contact Configuration	Catalog Number	Price U.S. $ ④
Screw	NO	**M22-K10**	10.00
	NO, Early-Make	**M22-K10P**	11.00
	NC	**M22-K01**	10.00
	NC, Late-Break	**M22-K01D**	11.00
Spring-Cage	NO	**M22-CK10**	13.00
	NC	**M22-CK01**	13.00
	NC, Late-Break	**M22-CK01D**	11.00
	2NO	**M22-CK20**	23.00
	2NC	**M22-CK02**	23.00
	NO-NC	**M22-CK11**	23.00

Notes

① For complete listing of available button plates and contact blocks, see Accessories, **Pages 59–64**.

② Minimum order quantity of (10).

③ When ordering, specify inscription per catalog number suffix from the symbols library (see **Pages 77–84**) into the Order Notes. For example, M22-XDH-S-ETCH; Order Notes: Mark with symbol X91, Line item #_.

④ Discount Symbol: **1CD1**.

Non-Illuminated Pushbuttons, Extended, Maintained ①

Operators Only ②

	Bezel	Button Color	Catalog Number	Price U.S. $ ⑤
M22-DRH-W 	Silver	Black	**M22-DRH-S**	11.00
		Red	**M22-DRH-R**	11.00
		Green	**M22-DRH-G**	11.00
		White	**M22-DRH-W**	11.00
		Blue	**M22-DRH-B**	11.00
		Yellow	**M22-DRH-Y**	11.00
		③	**M22-DRH-X-SRG**	14.00
		④	**M22-DRH-X-SWRGYB**	19.00
M22S-DRH-W 	Black	Black	**M22S-DRH-S**	9.50
		Red	**M22S-DRH-R**	9.50
		Green	**M22S-DRH-G**	9.50
		White	**M22S-DRH-W**	9.50
		Blue	**M22S-DRH-B**	9.50
		Yellow	**M22S-DRH-Y**	9.50
		③	**M22S-DRH-X-SRG**	12.50
		④	**M22S-DRH-X-SWRGYB**	17.50

Notes

① Maintained pushbuttons can be converted in the field to momentary operation by switching the locking ring, which is accessible through the side of the operator body.
② Includes contact block mounting adapter.
③ Buttonless operator comes with 3 color buttons (Black, Red, Green).
④ Buttonless operator comes with all 6 color buttons (Black, White, Red, Green, Yellow, Blue).
⑤ Discount Symbol: **1CD1**.

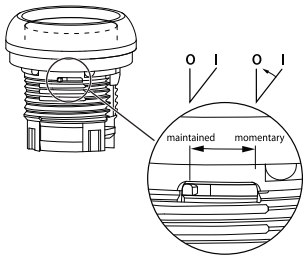

⊖ = Positively driven contact.

Note: This pilot device features a selectable function switch that enables the device to be set to either maintained or momentary operation.

Non-Illuminated Pushbuttons, Extended, Maintained [1]

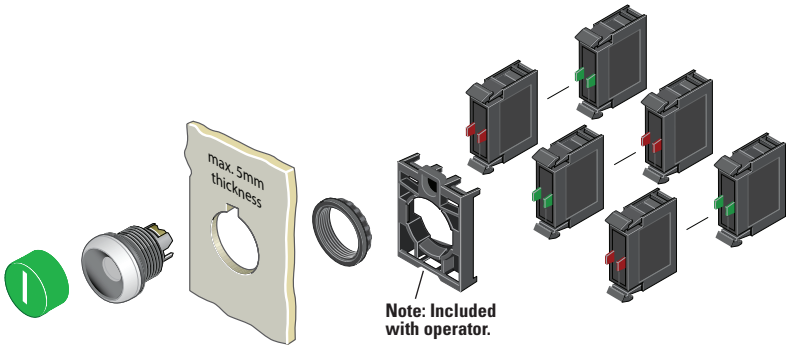

Components

Button Plates [2]

	Color	Inscription	Catalog Number	Price U.S. $ [5]
M22-XDH-W 	Black	—	**M22-XDH-S** [3]	2.00
		Custom	**M22-XDH-S-ETCH** [4]	3.00
		STOP	**M22-XDH-S-GB0**	3.00
		START	**M22-XDH-S-GB1**	3.00
		CLOSE	**M22-XDH-S-GB2**	3.00
		UP	**M22-XDH-S-GB3**	3.00
		DOWN	**M22-XDH-S-GB4**	3.00
		OFF	**M22-XDH-S-GB5**	3.00
		ON	**M22-XDH-S-GB6**	3.00
		TEST	**M22-XDH-S-GB9**	3.00
		FORWARD	**M22-XDH-S-GB15**	3.00
		REVERSE	**M22-XDH-S-GB16**	3.00
		RAISE	**M22-XDH-S-GB17**	3.00
		LOWER	**M22-XDH-S-GB18**	3.00
		◎	**M22-XDH-S-X0**	3.00
		①	**M22-XDH-S-X1**	3.00
		⊕	**M22-XDH-S-X4**	3.00
		⊖	**M22-XDH-S-X5**	3.00
		⑦	**M22-XDH-S-X7**	3.00
	Red	—	**M22-XDH-R** [3]	2.00
		Custom	**M22-XDH-R-ETCH** [4]	3.00
		STOP	**M22-XDH-R-GB0**	3.00
		OFF	**M22-XDH-R-GB5**	3.00
		◎	**M22-XDH-R-X0**	3.00
	Green	—	**M22-XDH-G** [3]	2.00
		Custom	**M22-XDH-G-ETCH** [4]	3.00
		START	**M22-XDH-G-GB1**	3.00
		ON	**M22-XDH-G-GB6**	3.00
		①	**M22-XDH-G-X1**	3.00
	Blue	—	**M22-XDH-B** [3]	2.00
		Custom	**M22-XDH-B-ETCH** [4]	3.00
		RESET	**M22-XDH-B-GB14**	3.00
		Ⓡ	**M22-XDH-B-X6**	3.00
	White	—	**M22-XDH-W** [3]	2.00
		Custom	**M22-XDH-W-ETCH** [4]	3.00
		START	**M22-XDH-W-GB1**	3.00
		①	**M22-XDH-W-X1**	3.00
	Yellow	—	**M22-XDH-Y** [3]	2.00
		Custom	**M22-XDH-Y-ETCH** [4]	3.00
	Black, Red, Green	—	**M22-XDH-SRG**	5.00
	Black, White, Red, Green, Yellow, Blue	—	**M22-XDH-SWRGYB**	10.00

Buttonless Operator

	Bezel	Catalog Number	Price U.S. $ [5]
M22-DR-X 	Silver	**M22-DR-X**	9.00
M22S-DR-X 	Black	**M22S-DR-X**	7.50

Contact Blocks [2]

	Terminal Type	Contact Configuration	Catalog Number	Price U.S. $ [5]
M22-K10 	Screw	NO	**M22-K10**	10.00
		NO, Early-Make	**M22-K10P**	11.00
		NC	**M22-K01**	10.00
		NC, Late-Break	**M22-K01D**	11.00
	Spring-Cage	NO	**M22-CK10**	13.00
		NC	**M22-CK01**	13.00
		NC, Late-Break	**M22-CK01D**	11.00
		2NO	**M22-CK20**	23.00
		2NC	**M22-CK02**	23.00
		NO-NC	**M22-CK11**	23.00

Notes

① Maintained pushbuttons can be converted in the field to momentary operation by switching the locking ring, which is accessible through the side of the operator body.

② For complete listing of available button plates and contact blocks, see Accessories, **Pages 59–64**.

③ Minimum order quantity of (10).

④ When ordering, specify inscription per catalog number suffix from the symbols library (see **Pages 77–84**) into the Order Notes. For example, M22-XDH-S-ETCH; Order Notes: Mark with symbol X91, Line item #_.

⑤ Discount Symbol: **1CD1**.

Catalog Number Selection

Illuminated Pushbuttons

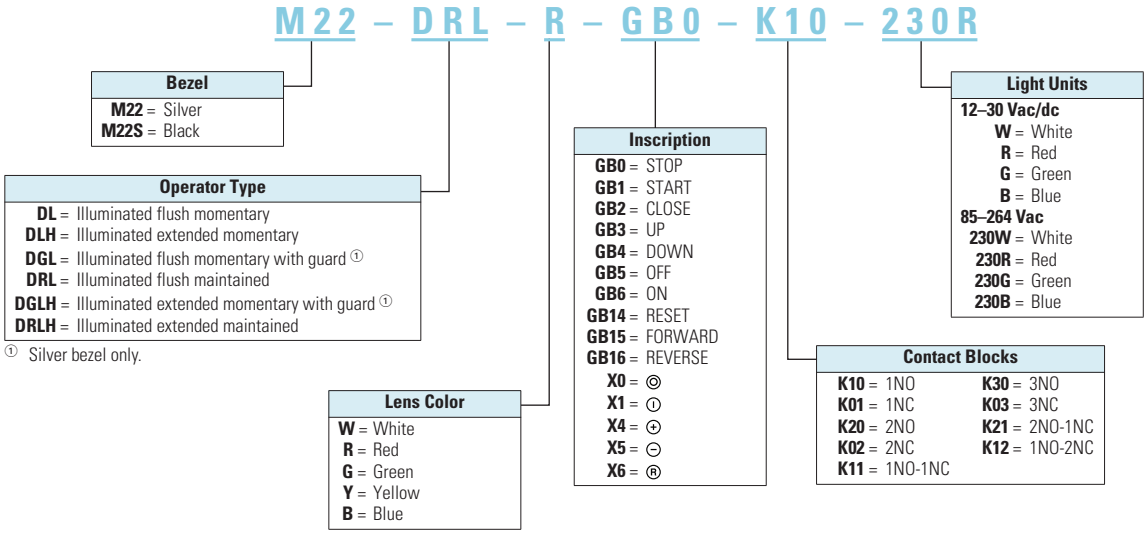

Note: Catalog Number Selection is for illustrative purposes only and not to be used to create new catalog numbers.

Product Selection

Illuminated Pushbuttons, Flush, Momentary

Complete Devices

	Bezel	Button Color	Contact Block Configuration	Light Unit Voltage	Catalog Number	Price U.S. $ ①
M22-DL-G-K01-G 	Silver	Red	NC	12–30 Vac/dc	**M22-DL-R-K01-R**	45.75
			NC	85–264 Vac	**M22-DL-R-K01-230R**	45.75
			2NC	12–30 Vac/dc	**M22-DL-R-K02-R**	56.00
			2NC	85–264 Vac	**M22-DL-R-K02-230R**	56.00
			1NO/1NC	12–30 Vac/dc	**M22-DL-R-K11-R**	56.00
			1NO/1NC	85–264 Vac	**M22-DL-R-K11-230R**	56.00
		Green	NO	12–30 Vac/dc	**M22-DL-G-K10-G**	45.75
			NO	85–264 Vac	**M22-DL-G-K10-230G**	45.75
			2NO	12–30 Vac/dc	**M22-DL-G-K20-G**	56.00
			2NO	85–264 Vac	**M22-DL-G-K20-230G**	56.00
			1NO/1NC	12–30 Vac/dc	**M22-DL-G-K11-G**	56.00
			1NO/1NC	85–264 Vac	**M22-DL-G-K11-230G**	56.00
		White	NO	12–30 Vac/dc	**M22-DL-W-K10-W**	45.75
			NO	85–264 Vac	**M22-DL-W-K10-230W**	45.75
			2NO	12–30 Vac/dc	**M22-DL-W-K20-W**	56.00
			2NO	85–264 Vac	**M22-DL-W-K20-230W**	56.00
			1NO/1NC	12–30 Vac/dc	**M22-DL-W-K11-W**	56.00
			1NO/1NC	85–264 Vac	**M22-DL-W-K11-230W**	56.00
M22S-DL-G-K01-G 	Black	Red	NC	12–30 Vac/dc	**M22S-DL-R-K01-R**	44.25
			NC	85–264 Vac	**M22S-DL-R-K01-230R**	44.25
			2NC	12–30 Vac/dc	**M22S-DL-R-K02-R**	54.50
			2NC	85–264 Vac	**M22S-DL-R-K02-230R**	54.50
			1NO/1NC	12–30 Vac/dc	**M22S-DL-R-K11-R**	54.50
			1NO/1NC	85–264 Vac	**M22S-DL-R-K11-230R**	54.50
		Green	NO	12–30 Vac/dc	**M22S-DL-G-K10-G**	44.25
			NO	85–264 Vac	**M22S-DL-G-K10-230G**	44.25
			2NO	12–30 Vac/dc	**M22S-DL-G-K20-G**	54.50
			2NO	85–264 Vac	**M22S-DL-G-K20-230G**	54.50
			1NO/1NC	12–30 Vac/dc	**M22S-DL-G-K11-G**	54.50
			1NO/1NC	85–264 Vac	**M22S-DL-G-K11-230G**	54.50
		White	NO	12–30 Vac/dc	**M22S-DL-W-K10-W**	44.25
			NO	85–264 Vac	**M22S-DL-W-K10-230W**	44.25
			2NO	12–30 Vac/dc	**M22S-DL-W-K20-W**	54.50
			2NO	85–264 Vac	**M22S-DL-W-K20-230W**	54.50
			1NO/1NC	12–30 Vac/dc	**M22S-DL-W-K11-W**	54.50
			1NO/1NC	85–264 Vac	**M22S-DL-W-K11-230W**	54.50

Note

① Discount Symbol: **1CD1**.

Illuminated Pushbuttons, Flush, Momentary

Operators Only ①

	Bezel	Button Color	Catalog Number	Price U.S. $ ②
M22-DL-G 	Silver	Red	**M22-DL-R**	9.70
		Green	**M22-DL-G**	9.70
		White	**M22-DL-W**	9.70
		Blue	**M22-DL-B**	9.70
		Yellow	**M22-DL-Y**	9.70
M22S-DL-G 	Black	Red	**M22S-DL-R**	8.20
		Green	**M22S-DL-G**	8.20
		White	**M22S-DL-W**	8.20
		Blue	**M22S-DL-B**	8.20
		Yellow	**M22S-DL-Y**	8.20
M22-DGL-G 	Silver Guarded	Red	**M22-DGL-R**	17.20
		Green	**M22-DGL-G**	17.20
		White	**M22-DGL-W**	17.20
		Blue	**M22-DGL-Y**	17.20
		Yellow	**M22-DGL-B**	17.20

Notes

① Includes contact block mounting adapter.

② Discount Symbol: **1CD1**.

47

Illuminated Pushbuttons, Flush, Momentary

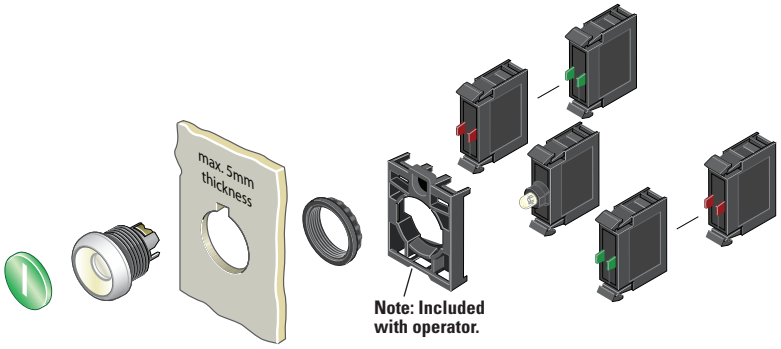

Components

Button Lenses ①

	Color	Inscription	Catalog Number	Price U.S. $ ④
M22-XDL-G 	Red	—	**M22-XDL-R** ②	1.40
		Custom	**M22-XDL-R-ETCH** ③	2.40
		STOP	**M22-XDL-R-GB0**	2.40
		OFF	**M22-XDL-R-GB5**	2.40
		◎	**M22-XDL-R-X0**	2.40
	Green	—	**M22-XDL-G** ②	1.40
		Custom	**M22-XDL-G-ETCH** ③	2.40
		START	**M22-XDL-G-GB1**	2.40
		ON	**M22-XDL-G-GB6**	2.40
		①	**M22-XDL-G-X1**	2.40
	Blue	—	**M22-XDL-B** ②	1.40
		Custom	**M22-XDL-B-ETCH** ③	2.40
		RESET	**M22-XDL-B-GB14**	2.40
		Ⓡ	**M22-XDL-B-X6**	2.40
	White	—	**M22-XDL-W** ②	1.40
		Custom	**M22-XDL-W-ETCH** ③	2.40
	Yellow	—	**M22-XDL-Y** ②	1.40
		Custom	**M22-XDL-Y-ETCH** ③	2.40

Buttonless Operator

	Bezel	Catalog Number	Price U.S. $ ④
M22-D-X 	Silver	**M22-DL-X**	8.30
M22S-D-X 	Black	**M22S-DL-X**	6.80
M22-DG-X 	Silver Guarded	**M22-DGL-X**	15.80

Light Units ①

	Terminal Type	LED Color	Light Unit Voltage	Catalog Number	Price U.S. $ ④
M22-LED-W 	Screw	White	12–30 Vac/dc	**M22-LED-W**	26.00
		Red		**M22-LED-R**	26.00
		Green		**M22-LED-G**	26.00
		Blue		**M22-LED-B**	26.00
	Screw	White	85–264 Vac	**M22-LED230-W**	26.00
		Red		**M22-LED230-R**	26.00
		Green		**M22-LED230-G**	26.00
		Blue		**M22-LED230-B**	26.00

Contact Blocks ①

	Terminal Type	Contact Configuration	Catalog Number	Price U.S. $ ④
M22-K10 	Screw	NO	**M22-K10**	10.00
		NO, Early-Make	**M22-K10P**	11.00
		NC	**M22-K01**	10.00
		NC, Late-Break	**M22-K01D**	11.00
	Spring-Cage	NO	**M22-CK10**	13.00
		NC	**M22-CK01**	13.00
		NC, Late-Break	**M22-CK01D**	11.00
		2NO	**M22-CK20**	23.00
		2NC	**M22-CK02**	23.00
		NO-NC	**M22-CK11**	23.00

Notes

① For complete listing of available button lenses, light units and contact blocks, see Accessories, **Pages 59–64**.
② Minimum order quantity of (10).
③ When ordering, specify inscription per catalog number suffix from the symbols library (see **Pages 77–84**) into the Order Notes. For example, M22-XDL-R-ETCH; Order Notes: Mark with symbol X91, Line item #_.
④ Discount Symbol: **1CD1**.

Illuminated Pushbuttons, Flush, Maintained ①

Complete Devices

	Bezel	Button Color	Contact Block Configuration	Light Unit Voltage	Catalog Number	Price U.S. $ ③
M22-DRL-W-K10-W 	Silver	White	NO	12–30 Vac/dc	**M22-DRL-W-K10-W**	51.50
			NO	85–264 Vac	**M22-DRL-W-K10-230W**	51.50
			NC	12–30 Vac/dc	**M22-DRL-W-K01-W**	51.50
			NC	85–264 Vac	**M22-DRL-W-K01-230W**	51.50
			2NO	12–30 Vac/dc	**M22-DRL-W-K20-W**	61.50
			2NO	85–264 Vac	**M22-DRL-W-K20-230W**	61.50
			2NC	12–30 Vac/dc	**M22-DRL-W-K02-W**	61.50
			2NC	85–264 Vac	**M22-DRL-W-K02-230W**	61.50
			1NO/1NC	12–30 Vac/dc	**M22-DRL-W-K11-W**	61.50
			1NO/1NC	85–264 Vac	**M22-DRL-W-K11-230W**	61.50
M22S-DRL-W-K10-W 	Black	White	NO	12–30 Vac/dc	**M22S-DRL-W-K10-W**	50.00
			NO	85–264 Vac	**M22S-DRL-W-K10-230W**	50.00
			NC	12–30 Vac/dc	**M22S-DRL-W-K01-W**	50.00
			NC	85–264 Vac	**M22S-DRL-W-K01-230W**	50.00
			2NO	12–30 Vac/dc	**M22S-DRL-W-K20-W**	60.00
			2NO	85–264 Vac	**M22S-DRL-W-K20-230W**	60.00
			2NC	12–30 Vac/dc	**M22S-DRL-W-K02-W**	60.00
			2NC	85–264 Vac	**M22S-DRL-W-K02-230W**	60.00
			1NO/1NC	12–30 Vac/dc	**M22S-DRL-W-K11-W**	60.00
			1NO/1NC	85–264 Vac	**M22S-DRL-W-K11-230W**	60.00

Operators Only ②

	Bezel	Button Color	Catalog Number	Price U.S. $ ③
M22-DRL-W 	Silver	Red	**M22-DRL-R**	15.50
		Green	**M22-DRL-G**	15.50
		White	**M22-DRL-W**	15.50
		Blue	**M22-DRL-B**	15.50
		Yellow	**M22-DRL-Y**	15.50
M22S-DRL-W 	Black	Red	**M22S-DRL-R**	14.00
		Green	**M22S-DRL-G**	14.00
		White	**M22S-DRL-W**	14.00
		Blue	**M22S-DRL-B**	14.00
		Yellow	**M22S-DRL-Y**	14.00

Notes

① Maintained pushbuttons can be converted in the field to momentary operation by switching the locking ring, which is accessible through the side of the operator body.

② Includes contact block mounting adapter.

③ Discount Symbol: **1CD1**.

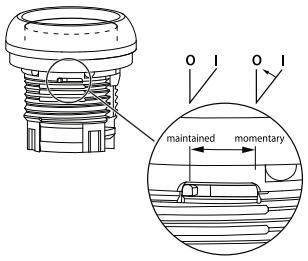

⊖ = Positively driven contact.

Note: This pilot device features a selectable function switch that enables the device to be set to either maintained or momentary operation.

Illuminated Pushbuttons, Flush, Maintained ①

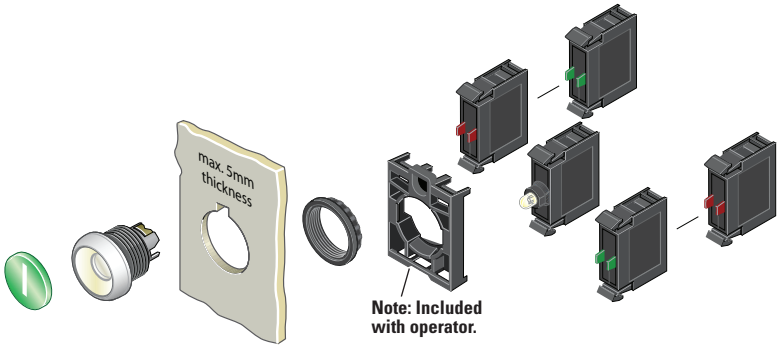

Components

Button Lenses ②

M22-XDL-W

Color	Inscription	Catalog Number	Price U.S. $ ⑤
Red	—	**M22-XDL-R** ③	1.40
	Custom	**M22-XDL-R-ETCH** ④	2.40
	STOP	**M22-XDL-R-GB0**	2.40
	OFF	**M22-XDL-R-GB5**	2.40
	◎	**M22-XDL-R-X0**	2.40
Green	—	**M22-XDL-G** ③	1.40
	Custom	**M22-XDL-G-ETCH** ④	2.40
	START	**M22-XDL-G-GB1**	2.40
	ON	**M22-XDL-G-GB6**	2.40
	①	**M22-XDL-G-X1**	2.40
Blue	—	**M22-XDL-B** ③	1.40
	Custom	**M22-XDL-B-ETCH** ④	2.40
	RESET	**M22-XDL-B-GB14**	2.40
	Ⓡ	**M22-XDL-B-X6**	2.40
White	—	**M22-XDL-W** ③	1.40
	Custom	**M22-XDL-W-ETCH** ④	2.40
Yellow	—	**M22-XDL-Y** ③	1.40
	Custom	**M22-XDL-Y-ETCH** ④	2.40

Buttonless Operator

M22-DRL-X



M22S-DRL-X



Bezel	Catalog Number	Price U.S. $ ⑤
Silver	**M22-DRL-X**	14.10
Black	**M22S-DRL-X**	12.60

Light Units ②

M22-LED-W



Terminal Type	LED Color	Light Unit Voltage	Catalog Number	Price U.S. $ ⑤
Screw	White	12–30 Vac/dc	**M22-LED-W**	26.00
	Red		**M22-LED-R**	26.00
	Green		**M22-LED-G**	26.00
	Blue		**M22-LED-B**	26.00
Screw	White	85–264 Vac	**M22-LED230-W**	26.00
	Red		**M22-LED230-R**	26.00
	Green		**M22-LED230-G**	26.00
	Blue		**M22-LED230-B**	26.00

Contact Blocks ②

M22-K10



Terminal Type	Contact Configuration	Catalog Number	Price U.S. $ ⑤
	NO	**M22-K10**	10.00
	NO, Early-Make	**M22-K10P**	11.00
	NC	**M22-K01**	10.00
	NC, Late-Break	**M22-K01D**	11.00
Spring-Cage	NO	**M22-CK10**	13.00
	NC	**M22-CK01**	13.00
	NC, Late-Break	**M22-CK01D**	11.00
	2NO	**M22-CK20**	23.00
	2NC	**M22-CK02**	23.00
	NO-NC	**M22-CK11**	23.00

Notes

① Maintained pushbuttons can be converted in the field to momentary operation by switching the locking ring, which is accessible through the side of the operator body.

② For complete listing of available button lenses, light units and contact blocks, see Accessories, **Pages 59–64**.

③ Minimum order quantity of (10).

④ When ordering, specify inscription per catalog number suffix from the symbols library (see **Pages 77–84**) into the Order Notes. For example, M22-XDL-R-ETCH; Order Notes: Mark with symbol X91, Line item #_.

⑤ Discount Symbol: **1CD1**.

Illuminated Pushbuttons, Extended, Momentary

Complete Devices

	Bezel	Button Color	Contact Block Configuration	Light Unit Voltage	Catalog Number	Price U.S. $ ②
M22-DLH-R-K11-R 	Silver	Red	1NO/1NC	12–30 Vac/dc	**M22-DLH-R-K11-R**	57.00
			1NO/1NC	85–264 Vac	**M22-DLH-R-K11-230R**	57.00
		Green	2NO	12–30 Vac/dc	**M22-DLH-G-K20-G**	57.00
			2NO	85–264 Vac	**M22-DLH-G-K20-230G**	57.00
		White	2NO	12–30 Vac/dc	**M22-DLH-W-K20-W**	57.00
			2NO	85–264 Vac	**M22-DLH-W-K20-230W**	57.00
M22S-DLH-R-K11-R 	Black	Red	1NO/1NC	12–30 Vac/dc	**M22S-DLH-R-K11-R**	55.50
			1NO/1NC	85–264 Vac	**M22S-DLH-R-K11-230R**	55.50
		Green	2NO	12–30 Vac/dc	**M22S-DLH-G-K20-G**	55.50
			2NO	85–264 Vac	**M22S-DLH-G-K20-230G**	55.50
		White	2NO	12–30 Vac/dc	**M22S-DLH-W-K20-W**	55.50
			2NO	85–264 Vac	**M22S-DLH-W-K20-230W**	55.50

Operators Only ①

	Bezel	Button Color	Catalog Number	Price U.S. $ ②
M22-DLH-R 	Silver	Red	**M22-DLH-R**	10.70
		Green	**M22-DLH-G**	10.70
		White	**M22-DLH-W**	10.70
		Blue	**M22-DLH-B**	10.70
		Yellow	**M22-DLH-Y**	10.70
M22S-DLH-R 	Black	Red	**M22S-DLH-R**	9.20
		Green	**M22S-DLH-G**	9.20
		White	**M22S-DLH-W**	9.20
		Blue	**M22S-DLH-B**	9.20
		Yellow	**M22S-DLH-Y**	9.20
M22-DGLH-R 	Silver Guarded	Red	**M22-DGLH-R**	18.20
		Green	**M22-DGLH-G**	18.20
		White	**M22-DGLH-W**	18.20
		Blue	**M22-DGLH-B**	18.20
		Yellow	**M22-DGLH-Y**	18.20

Notes

① Includes contact block mounting adapter.

② Discount Symbol: **1CD1**.

Illuminated Pushbuttons, Extended, Momentary

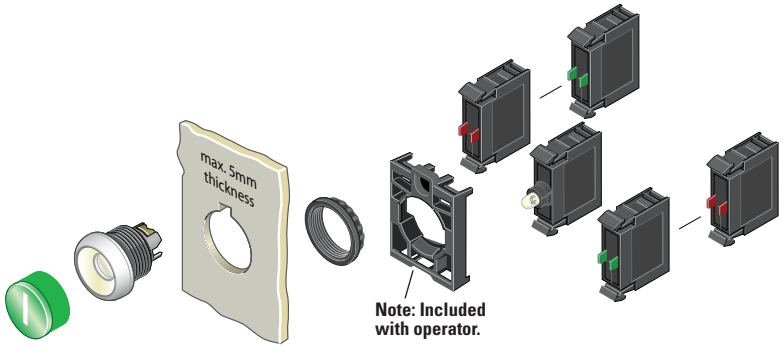

Components

Button Lenses ①

	Color	Inscription	Catalog Number	Price U.S. $ ④
M22-XDH-R 	Red	—	**M22-XDLH-R** ②	2.40
		Custom	**M22-XDLH-R-ETCH** ③	3.40
		STOP	**M22-XDLH-R-GB0**	3.40
		OFF	**M22-XDLH-R-GB5**	3.40
		◎	**M22-XDLH-R-X0**	3.40
	Green	—	**M22-XDLH-G** ②	2.40
		Custom	**M22-XDLH-G-ETCH** ③	3.40
		START	**M22-XDLH-G-GB1**	3.40
		ON	**M22-XDLH-G-GB6**	3.40
		①	**M22-XDLH-G-X1**	3.40
	Blue	—	**M22-XDLH-B** ②	2.40
		Custom	**M22-XDLH-B-ETCH** ③	3.40
		RESET	**M22-XDLH-B-GB14**	3.40
		Ⓡ	**M22-XDLH-B-X6**	3.40
	White	—	**M22-XDLH-W** ②	2.40
		Custom	**M22-XDLH-W-ETCH** ③	3.40
	Yellow	—	**M22-XDLH-Y** ②	2.40
		Custom	**M22-XDLH-Y-ETCH** ③	3.40

Buttonless Operator

	Bezel	Catalog Number	Price U.S. $ ④
M22-DL-X 	Silver	**M22-DL-X**	8.30
M22S-DL-X 	Black	**M22S-DL-X**	6.80
M22-DGL-X 	Silver Guarded	**M22-DGL-X**	15.80

Light Units ①

Terminal Type	LED Color	Light Unit Voltage	Catalog Number	Price U.S. $ ④
M22-LED-W  Screw	White	12–30 Vac/dc	**M22-LED-W**	26.00
	Red		**M22-LED-R**	26.00
	Green		**M22-LED-G**	26.00
	Blue		**M22-LED-B**	26.00
Screw	White	85–264 Vac	**M22-LED230-W**	26.00
	Red		**M22-LED230-R**	26.00
	Green		**M22-LED230-G**	26.00
	Blue		**M22-LED230-B**	26.00

Contact Blocks ①

Terminal Type	Contact Configuration	Catalog Number	Price U.S. $ ④
M22-K10  Screw	NO	**M22-K10**	10.00
	NO, Early-Make	**M22-K10P**	11.00
	NC	**M22-K01**	10.00
	NC, Late-Break	**M22-K01D**	11.00
Spring-Cage	NO	**M22-CK10**	13.00
	NC	**M22-CK01**	13.00
	NC, Late-Break	**M22-CK01D**	11.00
	2NO	**M22-CK20**	23.00
	2NC	**M22-CK02**	23.00
	NO-NC	**M22-CK11**	23.00

Notes

① For complete listing of available button lenses, light units and contact blocks, see Accessories, **Pages 59–64**.

② Minimum order quantity of (10).

③ When ordering, specify inscription per catalog number suffix from the symbols library (see **Pages 77–84**) into the Order Notes. For example, M22-XDH-S-ETCH; Order Notes: Mark with symbol X91, Line item #_.

④ Discount Symbol: **1CD1**.

Illuminated Pushbuttons, Extended, Maintained ①

Operators Only ②

M22-DRLH-W



Bezel	Button Color	Catalog Number	Price U.S. $ ③
Silver	Red	**M22-DRLH-R**	16.50
	Green	**M22-DRLH-G**	16.50
	White	**M22-DRLH-W**	16.50
	Blue	**M22-DRLH-B**	16.50
	Yellow	**M22-DRLH-Y**	16.50

M22S-DRLH-W



Black	Red	**M22S-DRLH-R**	15.00
	Green	**M22S-DRLH-G**	15.00
	White	**M22S-DRLH-W**	15.00
	Blue	**M22S-DRLH-B**	15.00
	Yellow	**M22S-DRLH-Y**	15.00

Notes

① Maintained pushbuttons can be converted in the field to momentary operation by switching the locking ring, which is accessible through the side of the operator body.

② Includes contact block mounting adapter

③ Discount Symbol: **1CD1**.

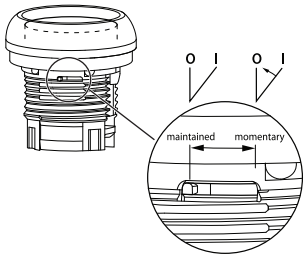

⊖ = Positively driven contact.

Note: This pilot device features a selectable function switch that enables the device to be set to either maintained or momentary operation.

Illuminated Pushbuttons, Extended, Maintained ①

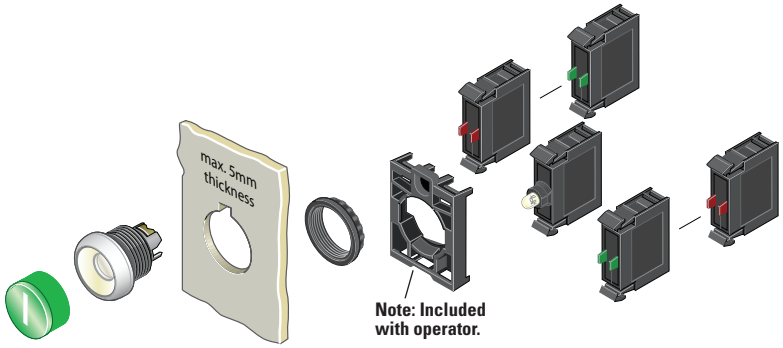

Components

Button Lenses ②

M22-XDLH-W

Color	Inscription	Catalog Number	Price U.S. $ ⑤
Red	—	**M22-XDLH-R** ③	2.40
	Custom	**M22-XDLH-R-ETCH** ④	3.40
	STOP	**M22-XDLH-R-GB0**	3.40
	OFF	**M22-XDLH-R-GB5**	3.40
	◎	**M22-XDLH-R-X0**	3.40
Green	—	**M22-XDLH-G** ③	2.40
	Custom	**M22-XDLH-G-ETCH** ④	3.40
	START	**M22-XDLH-G-GB1**	3.40
	ON	**M22-XDLH-G-GB6**	3.40
	⏽	**M22-XDLH-G-X1**	3.40
Blue	—	**M22-XDLH-B** ③	2.40
	Custom	**M22-XDLH-B-ETCH** ④	3.40
	RESET	**M22-XDLH-B-GB14**	3.40
	Ⓡ	**M22-XDLH-B-X6**	3.40
White	—	**M22-XDLH-W** ③	2.40
	Custom	**M22-XDLH-W-ETCH** ④	3.40
Yellow	—	**M22-XDLH-Y** ③	2.40
	Custom	**M22-XDLH-Y-ETCH** ④	3.40

Buttonless Operator

M22-DRL-X



M22S-DRL-X



Bezel	Catalog Number	Price U.S. $ ⑤
Silver	**M22-DRL-X**	14.10
Black	**M22S-DRL-X**	12.60

Light Units ②

M22-LED-W



Terminal Type	LED Color	Light Unit Voltage	Catalog Number	Price U.S. $ ⑤
	White	12–30 Vac/dc	**M22-LED-W**	26.00
	Red		**M22-LED-R**	26.00
	Green		**M22-LED-G**	26.00
	Blue		**M22-LED-B**	26.00
	White	85–264 Vac	**M22-LED230-W**	26.00
	Red		**M22-LED230-R**	26.00
	Green		**M22-LED230-G**	26.00
	Blue		**M22-LED230-B**	26.00

Contact Blocks ②

M22-K10



Terminal Type	Contact Configuration	Catalog Number	Price U.S. $ ⑤
Screw	NO	**M22-K10**	10.00
	NO, Early-Make	**M22-K10P**	11.00
	NC	**M22-K01**	10.00
	NC, Late-Break	**M22-K01D**	11.00
Spring-Cage	NO	**M22-CK10**	13.00
	NC	**M22-CK01**	13.00
	NC, Late-Break	**M22-CK01D**	11.00
	2NO	**M22-CK20**	23.00
	2NC	**M22-CK02**	23.00
	NO-NC	**M22-CK11**	23.00

Notes

① Maintained pushbuttons can be converted in the field to momentary operation by switching the locking ring, which is accessible through the side of the operator body.

② For complete listing of available button lenses, light units and contact blocks, see Accessories, **Pages 59–64**.

③ Minimum order quantity of (10).

④ When ordering, specify inscription per catalog number suffix from the symbols library (see **Pages 77–84**) into the Order Notes. For example, M22-XDLH-S-ETCH; Order Notes: Mark with symbol X91, Line item #_.

⑤ Discount Symbol: **1CD1**.

Catalog Number Selection

Indicating Lights

M22-L – B – GB8 – B

Operator Type
M22-L = Flush indicating light

Lens Color
W = White
R = Red
G = Green
Y = Yellow
B = Blue

Plate Inscription
ETCH = Custom ①
GB5 = OFF
GB6 = ON
GB8 = FAULT
GB15 = FORWARD
GB16 = REVERSE

Light Units
12–30 Vac/dc
W = White
R = Red
G = Green
B = Blue
85–264 Vac
230-W = White
230-R = Red
230-G = Green
230-B = Blue

Note: Light unit should match color of lens. Use white light unit with yellow lens.

① When ordering, specify inscription per catalog number suffix from the symbols library (see **Pages 77–84**) into the Order Notes. For example, M22-L-B-ETCH; Order Notes: Mark with symbol X91, Line item #_.

Note: Catalog Number Selection is for illustrative purposes only and not to be used to create new catalog numbers.

Product Selection

Indicating Lights, Flush

Complete Devices

M22-L-R-R



Lens Color	Light Color	Light Unit Voltage	Catalog Number	Price U.S. $ ②
White	White	12–30 Vac/dc	**M22-L-W-W**	36.75
Red	Red		**M22-L-R-R**	36.75
Green	Green		**M22-L-G-G**	36.75
Yellow	White		**M22-L-Y-W**	36.75
Blue	Blue		**M22-L-B-B**	36.75
White	White	85–264 Vac/dc	**M22-L-W-230W**	36.75
Red	Red		**M22-L-R-230R**	36.75
Green	Green		**M22-L-G-230G**	36.75
Yellow	White		**M22-L-Y-230W**	36.75
Blue	Blue		**M22-L-B-230B**	36.75

Operators Only ①

M22-L-R



Lens Color	Catalog Number	Price U.S. $ ②
White	**M22-L-W**	10.70
Red	**M22-L-R**	10.70
Green	**M22-L-G**	10.70
Yellow	**M22-L-Y**	10.70
Blue	**M22-L-B**	10.70

Notes

① Includes contact block mounting adapter.
② Discount Symbol: **1CD1**.

Indicating Lights, Flush

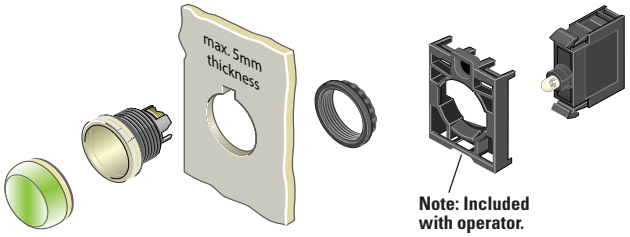

Components

Lenses ①

M22-XL-R



Color	Inscription	Catalog Number	Price U.S. $ ⑤
Red	—	**M22-XL-R** ②	6.60
	Custom	**M22-XL-R-ETCH** ③	7.60
	OFF	**M22-XL-R-GB5**	7.60
Green	—	**M22-XL-G** ②	6.60
	Custom	**M22-XL-G-ETCH** ③	7.60
	ON	**M22-XL-G-GB6**	7.60
	REVERSE	**M22-XL-G-GB16**	7.60
Blue	—	**M22-XL-B** ②	6.60
	Custom	**M22-XL-B-ETCH** ③	7.60
	FAULT	**M22-XL-B-GB8**	7.60
White	—	**M22-XL-W** ②	6.60
	Custom	**M22-XL-W-ETCH** ③	7.60
	OFF	**M22-XL-W-GB5**	7.60
	ON	**M22-XL-W-GB6**	7.60
	FAULT	**M22-XL-W-GB8**	7.60
	FORWARD	**M22-XL-W-GB15**	7.60
Yellow	—	**M22-XL-Y** ②	6.60
	Custom	**M22-XL-Y-ETCH** ③	7.60

Lensless Indicating Light

M22-L-X



Catalog Number	Price U.S. $ ⑤
M22-L-X	4.05

Light Units ①④

M22-LED-W



Terminal Type	LED Color	Light Unit Voltage	Catalog Number	Price U.S. $ ⑤
Screw	White	12–30 Vac/dc	**M22-LED-W**	26.00
	Red		**M22-LED-R**	26.00
	Green		**M22-LED-G**	26.00
	Blue		**M22-LED-B**	26.00
Screw	White	85–264 Vac	**M22-LED230-W**	26.00
	Red		**M22-LED230-R**	26.00
	Green		**M22-LED230-G**	26.00
	Blue		**M22-LED230-B**	26.00

Notes

① For complete listing of available lenses and light units, see Accessories, **Pages 59–64**.
② Minimum order quantity of (10).
③ When ordering, specify inscription per catalog number suffix from the symbols library (see **Pages 77–84**) into the Order Notes. For example, M22-XL-R-ETCH; Order Notes: Mark with symbol X91, Line item #_.
④ Select the same color LED element as lens color; for yellow lens, choose a white LED.
⑤ Discount Symbol: **1CD1**.

47

Catalog Number Selection

Emergency Stops

M22 – PVT – MS2 – K10 – 230R

Operator Color
M22 = Red
M22S = Black

Operator Type
PV = Non-illuminated push-pull emergency stop
PVT = Non-illuminated twist-to-release emergency stop
PVS = Non-illuminated keyed release (red operator only)
PVL = Illuminated push-pull emergency stop
PVLT = Illuminated twist-to-release emergency stop

Key Release Code
Blank = MS1
MS2 = MS2
MS3 = MS3
MS4 = MS4
MS5 = MS5
MS6 = MS6
MS7 = MS7
MS8 = MS8

Contact Blocks
K10 = NO
K10P = NO, Early-Make
K01 = NC
K01D = NC, Late-Break
CK10 = NO
CK01 = NC
CK01D = NC, Late-Break
Ck20 = 2NO
CK02 = 2NC
CK11 = NO-NC

Light Units
12–30 Vac/dc
W = White
R = Red
G = Green
B = Blue
85–264 Vac
230W = White
230R = Red
230G = Green
230B = Blue

Note: Catalog Number Selection is for illustrative purposes only and not to be used to create new catalog numbers.

Product Selection

Non-Illuminated Emergency Stops

M22-PV-K01



Complete Devices

Type	Color	Contact Block Configuration	Catalog Number	Price U.S. $ ①
Push-Pull	Red	NC	**M22-PV-K01**	30.75
		2NC	**M22-PV-K02**	40.75
		1NO-2NC	**M22-PV-K12**	50.50
Twist-to-Release	Red	NC	**M22-PVT-K01**	46.75
		2NC	**M22-PVT-K02**	57.00
		1NO-2NC	**M22-PVT-K12**	66.50
Key Release	Red	NC	**M22-PVS-K01**	77.00
		2NC	**M22-PVS-K02**	87.00
		1NO-2NC	**M22-PVS-K12**	96.50

Note
① Discount Symbol: **1CD1**.

Non-Illuminated Emergency Stops

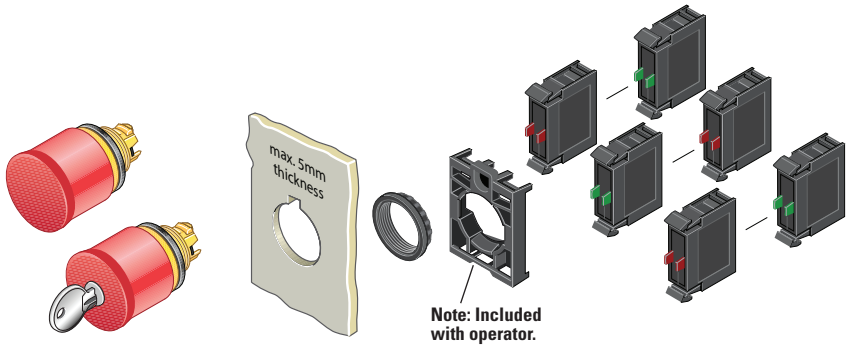

Components

Operators Only ①

M22-PV



Type	Color	Catalog Number	Price U.S. $ ⑥
Push-Pull	Red	**M22-PV**	20.60
	Black	**M22S-PV**	20.60
Twist-to-Release	Red	**M22-PVT**	36.75
	Black	**M22S-PVT**	36.75
Key Release ③	Red	**M22-PVS** ④	67.00
		M22-PVS-MS2	67.00
		M22-PVS-MS3	67.00
		M22-PVS-MS4	67.00
		M22-PVS-MS5	67.00
		M22-PVS-MS6	67.00
		M22-PVS-MS7	67.00
		M22-PVS-MS8	67.00

Contact Blocks ②

M22-K10



Terminal Type	Contact Configuration	Catalog Number	Price U.S. $ ⑥
Screw	NO	**M22-K10**	10.00
	NO, Early-Make	**M22-K10P**	11.00
	NC	**M22-K01**	10.00
	NC, Late-Break	**M22-K01D**	11.00
Spring-Cage	NO	**M22-CK10**	13.00
	NC	**M22-CK01**	13.00
	NC, Late-Break	**M22-CK01D**	11.00
	2NO	**M22-CK20**	23.00
	2NC	**M22-CK02**	23.00
	NO-NC	**M22-CK11**	23.00

Extra Keys ⑤

M22-ES-MS1



For Key Code	Catalog Number	Price U.S. $ ⑥
MS1	**M22-ES-MS1**	4.40
MS2	**M22-ES-MS2**	4.40
MS3	**M22-ES-MS3**	4.40
MS4	**M22-ES-MS4**	4.40
MS5	**M22-ES-MS5**	4.40
MS6	**M22-ES-MS6**	4.40
MS7	**M22-ES-MS7**	4.40
MS8	**M22-ES-MS8**	4.40

Accessories

M22-XGWK



M22-XGPV



M22G-XGPV



Description	Catalog Number	Price U.S. $ ⑥
Guard Ring	**M22-XGWK**	11.25
Yellow Guard Ring	**M22-XGPV**	16.25
Gray Guard Ring	**M22G-XGPV**	16.25
Sealing Shroud	**M22-PL-PV**	22.00

Notes

① Includes contact block mounting adapter.
② For complete listing of available contact blocks, see Accessories, **Pages 59–64**.
③ Key included. For identical locks and keys, use the same key code. One key is included with actuator; additional keys are available as accessories.
④ Includes Key Code MS1.
⑤ For use with key release operators only. One key included with operator.
⑥ Discount Symbol: **1CD1**.

Illuminated Emergency Stops

Complete Devices

M22-PVL-K01-R



Type	Button Color	LED Color	Contact Block Configuration	Light Unit Voltage	Catalog Number	Price U.S. $ ①
Push-Pull	Red	Red	NC	12–30 Vac/dc	**M22-PVL-K01-R**	57.00
			2NC	12–30 Vac/dc	**M22-PVL-K02-R**	67.00
			1NO-2NC	12–30 Vac/dc	**M22-PVL-K12-R**	76.50
			NC	85–264 Vac	**M22-PVL-K01-230R**	57.00
			2NC	85–264 Vac	**M22-PVL-K02-230R**	67.00
			1NO-2NC	85–264 Vac	**M22-PVL-K12-230R**	76.50
Twist-to-Release			NC	12–30 Vac/dc	**M22-PVLT-K01-R**	73.00
			2NC	12–30 Vac/dc	**M22-PVLT-K02-R**	83.00
			1NO-2NC	12–30 Vac/dc	**M22-PVLT-K12-R**	92.50
			NC	85–264 Vac	**M22-PVLT-K01-230R**	73.00
			2NC	85–264 Vac	**M22-PVLT-K02-230R**	83.00
			1NO-2NC	85–264 Vac	**M22-PVLT-K12-230R**	92.50

Note

① Discount Symbol: **1CD1**.

Illuminated Emergency Stops

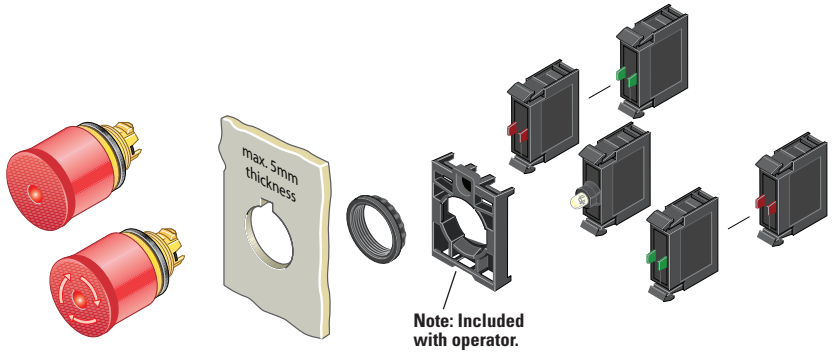

Components

Operators Only ①

Type	Color	Catalog Number	Price U.S. $ ③
Push-Pull	Red	**M22-PVL**	46.75
	Black	**M22S-PVL**	46.75
Twist-to-Release	Red	**M22-PVLT**	63.00
	Black	**M22S-PVLT**	63.00

M22-PVL



Light Units ②

Terminal Type	LED Color	Light Unit Voltage	Catalog Number	Price U.S. $ ③
Screw	White	12–30 Vac/dc	**M22-LED-W**	26.00
	Red	12–30 Vac/dc	**M22-LED-R**	26.00
Screw	White	85–264 Vac	**M22-LED230-W**	26.00
	Red	85–264 Vac	**M22-LED230-R**	26.00
Screw	White	207–264 Vac	**M22-LED230H-W**	26.00
	Red	207–264 Vac	**M22-LED230H-R**	26.00

M22-LED-W



Contact Blocks ②

Terminal Type	Contact Configuration	Catalog Number	Price U.S. $ ③
Screw	NO	**M22-K10**	10.00
	NO, Early-Make	**M22-K10P**	11.00
	NC	**M22-K01**	10.00
	NC, Late-Break	**M22-K01D**	11.00
Spring-Cage	NO	**M22-CK10**	13.00
	NC	**M22-CK01**	13.00
	NC, Late-Break	**M22-CK01D**	11.00
	2NO	**M22-CK20**	23.00
	2NC	**M22-CK02**	23.00
	NO-NC	**M22-CK11**	23.00

M22-K10



Accessories

Description	Catalog Number	Price U.S. $ ③
Guard Ring	**M22-XGWK**	11.25
Yellow Guard Ring	**M22-XGPV**	16.25
Gray Guard Ring	**M22G-XGPV**	16.25
Sealing Shroud	**M22-PL-PV**	22.00

M22-XGWK



M22-XGPV



M22G-XGPV



Notes

① Includes contact block mounting adapter.

② For complete listing of available light units and contact blocks, see Accessories, **Pages 59–64**.

③ Discount Symbol: **1CD1**.

47

Catalog Number Selection

Non-Illuminated Selector Switches

M22 – WRK _ – X91 – K10

Bezel Color
M22 = Silver
M22S = Black

Handle Type ①
W = Momentary rotary
WK = Momentary knob
WKV = Maintained V-position knob
WR = Maintained rotary
WRK = Maintained knob

① All momentary selector switches can be converted in the field to maintained operation with the removal of a color-coded adapter.

Number of Positions
Blank = 2-position
3 = 3-position
4 = 4-position

Inscription ②
X91 = AUTO-HAND
X92 = I II

② Rotary type only.

Contact Blocks
K10 = NO
K10P = NO, early-make

Options
K11 = NO-NC
K22 = 2NO-2NC
K20 = 2NO
K02 = 2NC

Note: Catalog Number Selection is for illustrative purposes only and not to be used to create new catalog numbers.

Product Selection

Non-Illuminated Selector Switches

Complete Devices, Knob Type ①

M22-WKV-K10



Type	Switching Position	Bezel	Contact Block Configuration	Catalog Number	Price U.S. $ ②
2-Position	Maintained	Silver	NO	**M22-WRK-K10**	24.40
			1NO-1NC	**M22-WRK-K11**	34.50
			2NO-2NC	**M22-WRK-K22**	54.50
		Black	NO	**M22S-WRK-K10**	21.40
			1NO-1NC	**M22S-WRK-K11**	31.50
			2NO-2NC	**M22S-WRK-K22**	51.50
	Maintained V	Silver	NO	**M22S-WKV-K10**	21.40
			1NO-1NC	**M22S-WKV-K11**	31.50
			2NO-2NC	**M22S-WKV-K22**	51.50
		Black	NO	**M22S-WKV-K10**	21.40
			1NO-1NC	**M22S-WKV-K11**	31.50
3-Position	Maintained	Silver	2NO	**M22-WRK3-K20**	33.00
			2NO-2NC	**M22-WRK3-K22**	53.00
		Black	2NO	**M22S-WRK3-K20**	31.50
			2NO-2NC	**M22S-WRK3-K22**	51.50

Notes
① Includes contact block mounting adapter.
② Discount Symbol: **1CD1**.

Non-Illuminated Selector Switches

Components

Operators Only, Knob Type ①

M22-WK



Type	Switching Position	Bezel	Catalog Number	Price U.S. $ ③
2-Position	Momentary ② 	Silver	**M22-WK**	16.90
		Black	**M22S-WK**	15.40
	Maintained 	Silver	**M22-WRK**	12.90
		Black	**M22S-WRK**	11.40
	Maintained V 	Silver	**M22-WKV**	12.90
		Black	**M22S-WKV**	11.40
3-Position	Momentary ② 	Silver	**M22-WK3**	16.90
		Black	**M22S-WK3**	15.40
	Maintained 	Silver	**M22-WRK3**	12.90
		Black	**M22S-WRK3**	11.40
	Maintained, Return from Left 	Silver	**M22-WRK3-2**	16.90
		Black	**M22S-WRK3-2**	15.40
	Maintained, Return from Right 	Silver	**M22-WRK3-1**	16.90
		Black	**M22S-WRK3-1**	15.40
4-Position	Maintained 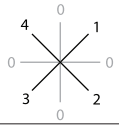	Silver	**M22-WRK4**	43.50
		Black	**M22S-WRK4**	42.00

Notes

① Includes contact block mounting adapter.

② Momentary selector switches can be converted in the field to maintained operation with the removal of a color coded adapter. See **Page 66**.

③ Discount Symbol: **1CD1**.

Non-Illuminated Selector Switches

Components

Operators Only, Rotary Type ①

M22S-WR3-X94



Type	Switching Position	Bezel	Rotary Type	Catalog Number	Price U.S. $ ④
2-Position	Momentary ② 	Silver	I-O	**M22-W**	19.40
		Black	I-O	**M22S-W**	17.90
	Maintained 	Silver	—	**M22-WR**	15.40
			Custom	**M22-WR-ETCH** ③	15.40
			AUTO-HAND	**M22-WR-X91**	15.40
			II-I	**M22-WR-X92**	15.40
		Black	—	**M22S-WR**	13.90
			Custom	**M22S-WR-ETCH** ③	13.90
			AUTO-HAND	**M22S-WR-X91**	13.90
			II-I	**M22S-WR-X92**	13.90
3-Position	Momentary ② 	Silver	I-O-II	**M22-W3**	19.40
	Maintained 	Silver	—	**M22-WR3**	14.40
			Custom	**M22-WR3-ETCH** ③	15.40
			AUTO-O-MAN	**M22-WR3-X94**	15.40
		Black	I-O-II	**M22S-W3**	17.90
			—	**M22S-WR3**	12.90
			Custom	**M22S-WR3-ETCH** ③	13.90
			AUTO-O-MAN	**M22S-WR3-X94**	13.90
4-Position	Maintained 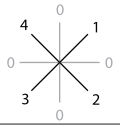	Silver	—	**M22-WR4**	45.00
		Black	—	**M22S-WR4**	43.50

Notes

① Includes contact block mounting adapter.

② Momentary selector switches can be converted in the field to maintained operation with the removal of a color coded adapter. See **Page 66**.

③ When ordering, specify inscription per catalog number suffix from the symbols library (see **Pages 77**–**84**) into the Order Notes. For example, M22-WR3-ETCH; Order Notes: Mark with symbol X88, Line item #_.

④ Discount Symbol: **1CD1**.

Non-Illuminated Selector Switches

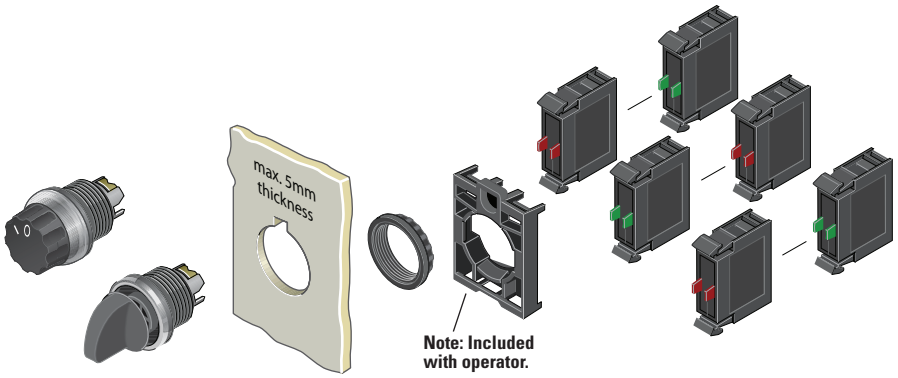

Components

Contact Blocks ①

M22-K10



Terminal Type	Contact Configuration	Catalog Number	Price U.S. $ ④
Screw	NO	**M22-K10**	10.00
	NO, Early-Make	**M22-K10P**	11.00
	NC	**M22-K01**	10.00
	NC, Late-Break	**M22-K01D**	11.00
Spring-Cage	NO	**M22-CK10**	13.00
	NC	**M22-CK01**	13.00
	NC, Late-Break	**M22-CK01D**	11.00
	2NO	**M22-CK20**	23.00
	2NC	**M22-CK02**	23.00
	NO-NC	**M22-CK11**	23.00

Accessories

	Description	Catalog Number	Price U.S. $ ④
M22-XW 	Plunger Bridge ②	**M22-XW**	4.00
M22-XWS 	Key Cover	**M22-XWS**	10.00
M22-XC-R 	Key Withdraw Adapter ③	**M22-XC-R**	4.00
M22-XC-Y 	Coding Adapter	**M22-XC-Y**	4.00

Notes

① For complete listing of available contact blocks, see Accessories, **Pages 59–64**.
② Plunger needed to actuate center-mounted contact blocks. Used for non-illuminated 3-position selector switches only.
③ Enables a keyed selector switch to be set to user-selected key withdraw position.
④ Discount Symbol: **1CD1**.

47

Catalog Number Selection

Illuminated Selector Switches

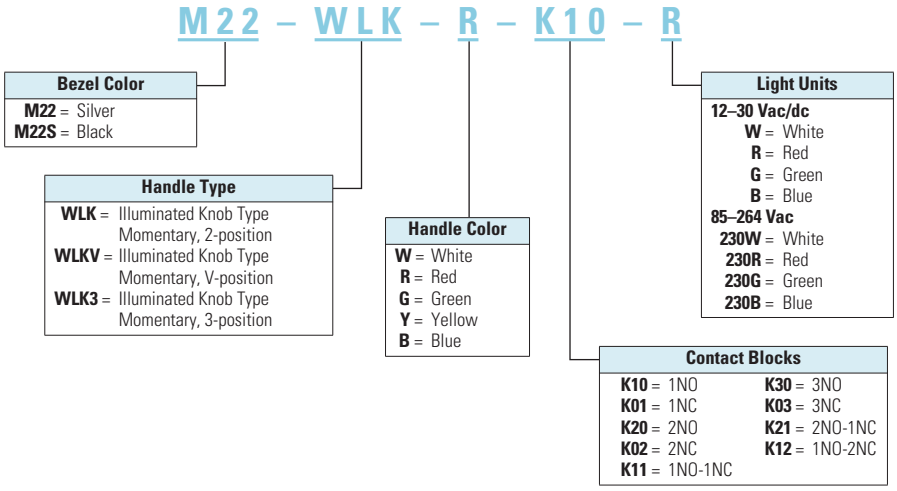

Note: Catalog Number Selection is for illustrative purposes only and not to be used to create new catalog numbers.

Product Selection

Illuminated Selector Switches

Components

M22-WLK-W



Operators Only, Knob Type ①

Type	Switching Position	Bezel	Button Color	Catalog Number	Price U.S. $ ③
2-Position	Momentary ② 	Silver	White	**M22-WLK-W**	22.90
			Red	**M22-WLK-R**	22.90
			Green	**M22-WLK-G**	22.90
			Yellow	**M22-WLK-Y**	22.90
			Blue	**M22-WLK-B**	22.90
		Black	White	**M22S-WLK-W**	21.40
			Red	**M22S-WLK-R**	21.40
			Green	**M22S-WLK-G**	21.40
			Yellow	**M22S-WLK-Y**	21.40
			Blue	**M22S-WLK-B**	21.40
	Maintained 	Silver	White	**M22-WRLK-W**	18.90
			Red	**M22-WRLK-R**	18.90
			Green	**M22-WRLK-G**	18.90
			Yellow	**M22-WRLK-Y**	18.90
			Blue	**M22-WRLK-B**	18.90
		Black	White	**M22S-WRLK-W**	17.40
			Red	**M22S-WRLK-R**	17.40
			Green	**M22S-WRLK-G**	17.40
			Yellow	**M22S-WRLK-Y**	17.40
			Blue	**M22S-WRLK-B**	17.40
	Maintained V 	Silver	White	**M22-WLKV-W**	18.90
			Red	**M22-WLKV-R**	18.90
			Green	**M22-WLKV-G**	18.90
			Yellow	**M22-WLKV-Y**	18.90
			Blue	**M22-WLKV-B**	18.90
		Black	White	**M22S-WLKV-W**	17.40
			Red	**M22S-WLKV-R**	17.40
			Green	**M22S-WLKV-G**	17.40
			Yellow	**M22S-WLKV-Y**	17.40
			Blue	**M22S-WLKV-B**	17.40

Notes

① Includes contact block mounting adapter.
② Momentary selector switches can be converted in the field to maintained operation with the removal of a color coded adapter. See **Page 66**.
③ Discount Symbol: **1CD1**.

Illuminated Selector Switches

Components

Operators Only, Knob Type ①

M22-WLK3-W



Type	Switching Position	Bezel	Button Color	Catalog Number	Price U.S. $ ③
3-Position	Momentary ② 	Silver	White	**M22-WLK3-W**	22.90
			Red	**M22-WLK3-R**	22.90
			Green	**M22-WLK3-G**	22.90
			Yellow	**M22-WLK3-Y**	22.90
			Blue	**M22-WLK3-B**	22.90
		Black	White	**M22S-WLK3-W**	21.40
			Red	**M22S-WLK3-R**	21.40
			Green	**M22S-WLK3-G**	21.40
			Yellow	**M22S-WLK3-Y**	21.40
			Blue	**M22S-WLK3-B**	21.40
	Maintained 	Silver	White	**M22-WRLK3-W**	18.90
			Red	**M22-WRLK3-R**	18.90
			Green	**M22-WRLK3-G**	18.90
			Yellow	**M22-WRLK3-Y**	18.90
			Blue	**M22-WRLK3-B**	18.90
		Black	White	**M22S-WRLK3-W**	17.40
			Red	**M22S-WRLK3-R**	17.40
			Green	**M22S-WRLK3-G**	17.40
			Yellow	**M22S-WRLK3-Y**	17.40
			Blue	**M22S-WRLK3-B**	17.40
	Maintained, Return from Right 	Silver	White	**M22-WRLK3-1-W**	22.90
			Red	**M22-WRLK3-1-R**	22.90
			Green	**M22-WRLK3-1-G**	22.90
			Yellow	**M22-WRLK3-1-Y**	22.90
			Blue	**M22-WRLK3-1-B**	22.90
		Black	White	**M22S-WRLK3-1-W**	21.40
			Red	**M22S-WRLK3-1-R**	21.40
			Green	**M22S-WRLK3-1-G**	21.40
			Yellow	**M22S-WRLK3-1-Y**	21.40
			Blue	**M22S-WRLK3-1-B**	21.40
	Maintained, Return from Left 	Silver	White	**M22-WRLK3-2-W**	22.90
			Red	**M22-WRLK3-2-R**	22.90
			Green	**M22-WRLK3-2-G**	22.90
			Yellow	**M22-WRLK3-2-Y**	22.90
			Blue	**M22-WRLK3-2-B**	22.90
		Black	White	**M22S-WRLK3-2-W**	21.40
			Red	**M22S-WRLK3-2-R**	21.40
			Green	**M22S-WRLK3-2-G**	21.40
			Yellow	**M22S-WRLK3-2-Y**	21.40
			Blue	**M22S-WRLK3-2-B**	21.40

Notes

① Includes contact block mounting adapter.

② Momentary selector switches can be converted in the field to maintained operation with the removal of a color coded adapter. See **Page 66**.

③ Discount Symbol: **1CD1**.

Illuminated Selector Switches

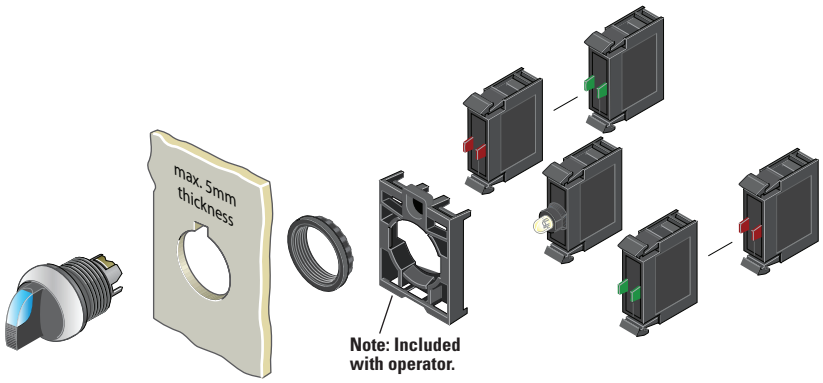

Light Units ①④

Terminal Type	LED Color	Light Unit Voltage	Catalog Number	Price U.S. $ ⑤
Screw	White	12–30 Vac/dc	**M22-LED-W**	26.00
	Red		**M22-LED-R**	26.00
	Green		**M22-LED-G**	26.00
	Blue		**M22-LED-B**	26.00
Screw	White	85–264 Vac	**M22-LED230-W**	26.00
	Red		**M22-LED230-R**	26.00
	Green		**M22-LED230-G**	26.00
	Blue		**M22-LED230-B**	26.00

M22-LED-W



Contact Blocks ①

Terminal Type	Contact Configuration	Catalog Number	Price U.S. $ ⑤
Screw	NO	**M22-K10**	10.00
	NO, Early-Make	**M22-K10P**	11.00
	NC	**M22-K01**	10.00
	NC, Late-Break	**M22-K01D**	11.00
Spring-Cage	NO	**M22-CK10**	13.00
	NC	**M22-CK01**	13.00
	NC, Late-Break	**M22-CK01D**	11.00
	2NO	**M22-CK20**	23.00
	2NC	**M22-CK02**	23.00
	NO-NC	**M22-CK11**	23.00

M22-K10



Accessories

Description	Catalog Number	Price U.S. $ ⑤
Plunger Bridge ②	**M22-XW**	4.00
Key Cover	**M22-XWS**	10.00
Key Withdraw Adapter ③	**M22-XC-R**	4.00
Coding Adapter	**M22-XC-Y**	4.00

M22-XW



M22-XWS



M22-XC-R



M22-XC-Y



Notes

① For complete listing of available light units and contact blocks, see Accessories, **Pages 59–64**.

② Plunger needed to actuate center-mounted contact blocks. Used for non-illuminated 3-position selector switches only.

③ Enables a keyed selector switch to be set to user-selected key withdraw position.

④ Select the same color LED element as lens color; for yellow lens, choose a white LED.

⑤ Discount Symbol: **1CD1**.

47

Catalog Number Selection

Key-Operated Selector Switches

M22 – WS – MS2 – A1

Bezel Color
M22 = Silver
M22S = Black

Handle Type
WS = 2-Position, Momentary
WS3 = 3-Position, Momentary
WRS = 2-Position, Maintained
WRS3 = 3-Position, Maintained

Key Code
Blank = MS1
MS2 = MS2
MS3 = MS3
MS4 = MS4
MS5 = MS5
MS6 = MS6
MS7 = MS7
MS8 = MS8

Key Removal Position
Refer to coding adapter assembly and functional test guide on **Page 66**.

Note: Catalog Number Selection is for illustrative purposes only and not to be used to create new catalog numbers.

Product Selection

Key-Operated Selector Switches ①②

Components

Operators Only ③

M22-WS



Type	Switching Position	Bezel	Key Removal Position	Key Code	Catalog Number	Price U.S. $ ⑤
2-Position	Momentary ④	Silver	Return from Right, Key Removable Left	MS1	**M22-WS**	53.50
				MS2	**M22-WS-MS2**	53.50
				MS3	**M22-WS-MS3**	53.50
				MS4	**M22-WS-MS4**	53.50
				MS5	**M22-WS-MS5**	53.50
				MS6	**M22-WS-MS6**	53.50
				MS7	**M22-WS-MS7**	53.50
				MS8	**M22-WS-MS8**	53.50
		Black	Return from Right, Key Removable Left	MS1	**M22S-WS**	52.00
				MS2	**M22S-WS-MS2**	52.00
				MS3	**M22S-WS-MS3**	52.00
				MS4	**M22S-WS-MS4**	52.00
				MS5	**M22S-WS-MS5**	52.00
				MS6	**M22S-WS-MS6**	52.00
				MS7	**M22S-WS-MS7**	52.00
				MS8	**M22S-WS-MS8**	52.00

Notes
① Includes 1 key.
② Key removal positions can be modified in the field using coding adapters; see chart on **Page 66**.
③ Includes contact block mounting adapter.
④ Momentary selector switches can be converted in the field to maintained operation with the removal of a color coded adapter. See **Page 66**.
⑤ Discount Symbol: **1CD1**.

Key-Operated Selector Switches ①②
Components

Operators Only, Continued ③

	Type	Switching Position	Bezel	Key Removal Position	Key Code	Catalog Number	Price U.S. $ ⑤
M22S-WRS 	2-Position	Maintained 	Silver	Key Removable Left	MS1	**M22-WRS-A1**	49.50
					MS2	**M22-WRS-MS2-A1**	49.50
					MS3	**M22-WRS-MS3-A1**	49.50
					MS4	**M22-WRS-MS4-A1**	49.50
					MS5	**M22-WRS-MS5-A1**	49.50
					MS6	**M22-WRS-MS6-A1**	49.50
					MS7	**M22-WRS-MS7-A1**	49.50
					MS8	**M22-WRS-MS8-A1**	49.50
				Key Removable Left/Right	MS1	**M22-WRS**	49.50
					MS2	**M22-WRS-MS2**	49.50
					MS3	**M22-WRS-MS3**	49.50
					MS4	**M22-WRS-MS4**	49.50
					MS5	**M22-WRS-MS5**	49.50
					MS6	**M22-WRS-MS6**	49.50
					MS7	**M22-WRS-MS7**	49.50
					MS8	**M22-WRS-MS8**	49.50
			Black	Key Removable Left	MS1	**M22S-WRS-A1**	48.00
					MS2	**M22S-WRS-MS2-A1**	48.00
					MS3	**M22S-WRS-MS3-A1**	48.00
					MS4	**M22S-WRS-MS4-A1**	48.00
					MS5	**M22S-WRS-MS5-A1**	48.00
					MS6	**M22S-WRS-MS6-A1**	48.00
					MS7	**M22S-WRS-MS7-A1**	48.00
					MS8	**M22S-WRS-MS8-A1**	48.00
				Key Removable Left/Right	MS1	**M22S-WRS**	48.00
					MS2	**M22S-WRS-MS2**	48.00
					MS3	**M22S-WRS-MS3**	48.00
					MS4	**M22S-WRS-MS4**	48.00
					MS5	**M22S-WRS-MS5**	48.00
					MS6	**M22S-WRS-MS6**	48.00
					MS7	**M22S-WRS-MS7**	48.00
					MS8	**M22S-WRS-MS8**	48.00
M22-WS3-X93 	3-Position	Momentary ④ 	Silver	Return From Left/Right, Key Removable Center	MS1	**M22-WS3**	53.50
					MS2	**M22-WS3-MS2**	53.50
					MS3	**M22-WS3-MS3**	53.50
					MS4	**M22-WS3-MS4**	53.50
					MS5	**M22-WS3-MS5**	53.50
					MS6	**M22-WS3-MS6**	53.50
					MS7	**M22-WS3-MS7**	53.50
					MS8	**M22-WS3-MS8**	53.50
			Black	Return From Left/Right, Key Removable Center	MS1	**M22S-WS3**	52.00
					MS2	**M22S-WS3-MS2**	52.00
					MS3	**M22S-WS3-MS3**	52.00
					MS4	**M22S-WS3-MS4**	52.00
					MS5	**M22S-WS3-MS5**	52.00
					MS6	**M22S-WS3-MS6**	52.00
					MS7	**M22S-WS3-MS7**	52.00
					MS8	**M22S-WS3-MS8**	52.00

Notes

① Includes 1 key.
② Key removal positions can be modified in the field using coding adapters; see chart on **Page 66**.
③ Includes contact block mounting adapter.
④ Momentary selector switches can be converted in the field to maintained operation with the removal of a color coded adapter. See **Page 66**.
⑤ Discount Symbol: **1CD1**.

Key-Operated Selector Switches ①②
Components

Operators Only, Continued ③

M22-WS3-X93





Type	Switching Position	Bezel	Key Removal Position	Key Code	Catalog Number	Price U.S. $ ④
3-Position	Maintained	Silver	Key Removable Center	MS1	**M22-WRS3-A1**	49.50
				MS2	**M22-WRS3-MS2-A1**	49.50
				MS3	**M22-WRS3-MS3-A1**	49.50
				MS4	**M22-WRS3-MS4-A1**	49.50
				MS5	**M22-WRS3-MS5-A1**	49.50
				MS6	**M22-WRS3-MS6-A1**	49.50
				MS7	**M22-WRS3-MS7-A1**	49.50
				MS8	**M22-WRS3-MS8-A1**	49.50
			Key Removable Center/Left	MS1	**M22-WRS3-A2**	49.50
				MS2	**M22-WRS3-MS2-A2**	49.50
				MS3	**M22-WRS3-MS3-A2**	49.50
				MS4	**M22-WRS3-MS4-A2**	49.50
				MS5	**M22-WRS3-MS5-A2**	49.50
				MS6	**M22-WRS3-MS6-A2**	49.50
				MS7	**M22-WRS3-MS7-A2**	49.50
				MS8	**M22-WRS3-MS8-A2**	49.50
			Key Removable Center/Right	MS1	**M22-WRS3-A3**	49.50
				MS2	**M22-WRS3-MS2-A3**	49.50
				MS3	**M22-WRS3-MS3-A3**	49.50
				MS4	**M22-WRS3-MS4-A3**	49.50
				MS5	**M22-WRS3-MS5-A3**	49.50
				MS6	**M22-WRS3-MS6-A3**	49.50
				MS7	**M22-WRS3-MS7-A3**	49.50
				MS8	**M22-WRS3-MS8-A3**	49.50
			Key Removable Left/Right	MS1	**M22-WRS3**	49.50
				MS2	**M22-WRS3-MS2**	49.50
				MS3	**M22-WRS3-MS3**	49.50
				MS4	**M22-WRS3-MS4**	49.50
				MS5	**M22-WRS3-MS5**	49.50
				MS6	**M22-WRS3-MS6**	49.50
				MS7	**M22-WRS3-MS7**	49.50
				MS8	**M22-WRS3-MS8**	49.50
			Return from Left, Key Removable Center	MS1	**M22-WRS3-A7**	53.50
				MS2	**M22-WRS3-MS2-A7**	53.50
				MS3	**M22-WRS3-MS3-A7**	53.50
				MS4	**M22-WRS3-MS4-A7**	53.50
				MS5	**M22-WRS3-MS5-A7**	53.50
				MS6	**M22-WRS3-MS6-A7**	53.50
				MS7	**M22-WRS3-MS7-A7**	53.50
				MS8	**M22-WRS3-MS8-A7**	53.50
			Return from Left, Key Removable Center/Right	MS1	**M22-WRS3-A6**	53.50
				MS2	**M22-WRS3-MS2-A6**	53.50
				MS3	**M22-WRS3-MS3-A6**	53.50
				MS4	**M22-WRS3-MS4-A6**	53.50
				MS5	**M22-WRS3-MS5-A6**	53.50
				MS6	**M22-WRS3-MS6-A6**	53.50
				MS7	**M22-WRS3-MS7-A6**	53.50
				MS8	**M22-WRS3-MS8-A6**	53.50

Notes

① Includes 1 key.
② Key removal positions can be modified in the field using coding adapters; see chart on **Page 66**
③ Includes contact block mounting adapter.
④ Discount Symbol: **1CD1**.

Key-Operated Selector Switches [1][2]
Components

Operators Only, Continued [3]

M22-WS3-X93





Type	Switching Position	Bezel	Key Removal Position	Key Code	Catalog Number	Price U.S. $ [4]
3-Position	Maintained	Silver	Return from Right, Key Removable Center	MS1	**M22-WRS3-A4**	53.50
				MS2	**M22-WRS3-MS2-A4**	53.50
				MS3	**M22-WRS3-MS3-A4**	53.50
				MS4	**M22-WRS3-MS4-A4**	53.50
				MS5	**M22-WRS3-MS5-A4**	53.50
				MS6	**M22-WRS3-MS6-A4**	53.50
				MS7	**M22-WRS3-MS7-A4**	53.50
				MS8	**M22-WRS3-MS8-A4**	53.50
			Return from Right, Key Removable Left/Center	MS1	**M22-WRS3-A5**	53.50
				MS2	**M22-WRS3-MS2-A5**	53.50
				MS3	**M22-WRS3-MS3-A5**	53.50
				MS4	**M22-WRS3-MS4-A5**	53.50
				MS5	**M22-WRS3-MS5-A5**	53.50
				MS6	**M22-WRS3-MS6-A5**	53.50
				MS7	**M22-WRS3-MS7-A5**	53.50
				MS8	**M22-WRS3-MS8-A5**	53.50
		Black	Key Removable Center	MS1	**M22S-WRS3-A1**	48.00
				MS2	**M22S-WRS3-MS2-A1**	48.00
				MS3	**M22S-WRS3-MS3-A1**	48.00
				MS4	**M22S-WRS3-MS4-A1**	48.00
				MS5	**M22S-WRS3-MS5-A1**	48.00
				MS6	**M22S-WRS3-MS6-A1**	48.00
				MS7	**M22S-WRS3-MS7-A1**	48.00
				MS8	**M22S-WRS3-MS8-A1**	48.00
			Key Removable Center/Left	MS1	**M22S-WRS3-A2**	48.00
				MS2	**M22S-WRS3-MS2-A2**	48.00
				MS3	**M22S-WRS3-MS3-A2**	48.00
				MS4	**M22S-WRS3-MS4-A2**	48.00
				MS5	**M22S-WRS3-MS5-A2**	48.00
				MS6	**M22S-WRS3-MS6-A2**	48.00
				MS7	**M22S-WRS3-MS7-A2**	48.00
				MS8	**M22S-WRS3-MS8-A2**	48.00
			Key Removable Center/Right	MS1	**M22S-WRS3-A3**	48.00
				MS2	**M22S-WRS3-MS2-A3**	48.00
				MS3	**M22S-WRS3-MS3-A3**	48.00
				MS4	**M22S-WRS3-MS4-A3**	48.00
				MS5	**M22S-WRS3-MS5-A3**	48.00
				MS6	**M22S-WRS3-MS6-A3**	48.00
				MS7	**M22S-WRS3-MS7-A3**	48.00
				MS8	**M22S-WRS3-MS8-A3**	48.00
			Key Removable Left/Right	MS1	**M22S-WRS3**	48.00
				MS2	**M22S-WRS3-MS2**	48.00
				MS3	**M22S-WRS3-MS3**	48.00
				MS4	**M22S-WRS3-MS4**	48.00
				MS5	**M22S-WRS3-MS5**	48.00
				MS6	**M22S-WRS3-MS6**	48.00
				MS7	**M22S-WRS3-MS7**	48.00
				MS8	**M22S-WRS3-MS8**	48.00

Notes

[1] Includes 1 key.
[2] Key removal positions can be modified in the field using coding adapters; see chart on **Page 66**
[3] Includes contact block mounting adapter.
[4] Discount Symbol: **1CD1**.

Key-Operated Selector Switches ①②
Components

Operators Only, Continued ③

M22-WS3-X93



Type	Switching Position	Bezel	Key Removal Position	Key Code	Catalog Number	Price U.S. $ ④
3-Position	Maintained 	Black	Return from Left, Key Removable Center	MS1	**M22S-WRS3-A7**	52.00
				MS2	**M22S-WRS3-MS2-A7**	52.00
				MS3	**M22S-WRS3-MS3-A7**	52.00
				MS4	**M22S-WRS3-MS4-A7**	52.00
				MS5	**M22S-WRS3-MS5-A7**	52.00
				MS6	**M22S-WRS3-MS6-A7**	52.00
				MS7	**M22S-WRS3-MS7-A7**	52.00
				MS8	**M22S-WRS3-MS8-A7**	52.00
			Return from Left, Key Removable Center/Right	MS1	**M22S-WRS3-A6**	52.00
				MS2	**M22S-WRS3-MS2-A6**	52.00
				MS3	**M22S-WRS3-MS3-A6**	52.00
				MS4	**M22S-WRS3-MS4-A6**	52.00
				MS5	**M22S-WRS3-MS5-A6**	52.00
				MS6	**M22S-WRS3-MS6-A6**	52.00
				MS7	**M22S-WRS3-MS7-A6**	52.00
				MS8	**M22S-WRS3-MS8-A6**	52.00
			Return from Right, Key Removable Center	MS1	**M22S-WRS3-A4**	52.00
				MS2	**M22S-WRS3-MS2-A4**	52.00
				MS3	**M22S-WRS3-MS3-A4**	52.00
				MS4	**M22S-WRS3-MS4-A4**	52.00
				MS5	**M22S-WRS3-MS5-A4**	52.00
				MS6	**M22S-WRS3-MS6-A4**	52.00
				MS7	**M22S-WRS3-MS7-A4**	52.00
				MS8	**M22S-WRS3-MS8-A4**	52.00
			Return from Right, Key Removable Left/Center	MS1	**M22S-WRS3-A5**	52.00
				MS2	**M22S-WRS3-MS2-A5**	52.00
				MS3	**M22S-WRS3-MS3-A5**	52.00
				MS4	**M22S-WRS3-MS4-A5**	52.00
				MS5	**M22S-WRS3-MS5-A5**	52.00
				MS6	**M22S-WRS3-MS6-A5**	52.00
				MS7	**M22S-WRS3-MS7-A5**	52.00
				MS8	**M22S-WRS3-MS8-A5**	52.00

Notes

① Includes 1 key.
② Key removal positions can be modified in the field using coding adapters; see chart on **Page 66**
③ Includes contact block mounting adapter.
④ Discount Symbol: **1CD1**.

Key-Operated Selector Switches

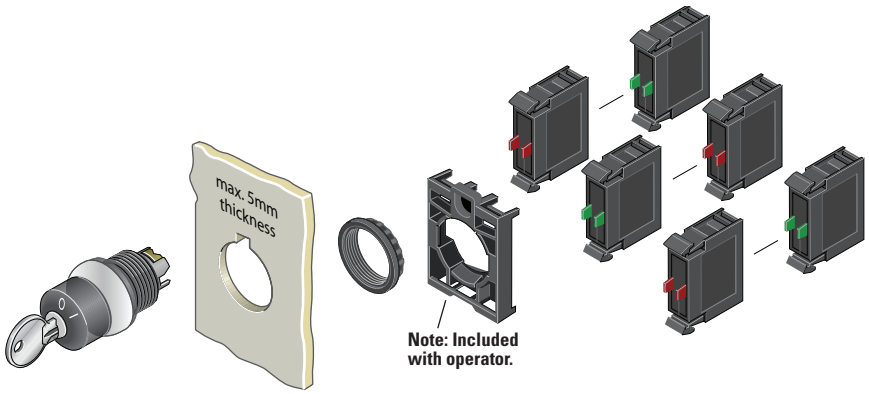

Components

Contact Blocks ①

M22-K10



Terminal Type	Contact Configuration	Catalog Number	Price U.S. $ ④
Screw	NO	**M22-K10**	10.00
	NO, Early-Make	**M22-K10P**	11.00
	NC	**M22-K01**	10.00
	NC, Late-Break	**M22-K01D**	11.00
Spring-Cage	NO	**M22-CK10**	13.00
	NC	**M22-CK01**	13.00
	NC, Late-Break	**M22-CK01D**	11.00
	2NO	**M22-CK20**	23.00
	2NC	**M22-CK02**	23.00
	NO-NC	**M22-CK11**	23.00

Extra Keys

M22-ES-MS1



Key Code	Catalog Number	Price U.S. $ ④
MS1	**M22-ES-MS1**	4.40
MS2	**M22-ES-MS2**	4.40
MS3	**M22-ES-MS3**	4.40
MS4	**M22-ES-MS4**	4.40
MS5	**M22-ES-MS5**	4.40
MS6	**M22-ES-MS6**	4.40
MS7	**M22-ES-MS7**	4.40
MS8	**M22-ES-MS8**	4.40

Accessories

	Description	Catalog Number	Price U.S. $ ④
M22-XW 	Plunger Bridge ②	**M22-XW**	4.00
M22-XWS 	Key Cover	**M22-XWS**	10.00
M22-XC-R 	Key Withdraw Adapter ③	**M22-XC-R**	4.00
M22-XC-Y 	Coding Adapter	**M22-XC-Y**	4.00

Notes

① For complete listing of available contact blocks, see Accessories, **Pages 59–64**.
② Plunger needed to actuate center-mounted contact blocks. Used for non-illuminated 3-position selector switches only.
③ Enables a keyed selector switch to be set to user-selected key withdraw position.
④ Discount Symbol: **1CD1**.

47

Catalog Number Selection

Mushroom Head Pushbuttons

M22 – DP – R – GB4 – K01

Bezel
M22 = Silver
M22S = Black

Operator Type
DP = Non-illuminated momentary mushroom head pushbutton
DRP = Non-illuminated maintained mushroom head pushbutton

Operator Color
R = Red

Plate Inscription	
ETCH = Custom ①	**X0** = ◎
GB0 = STOP	**X1** = ⓘ
GB1 = START	**X4** = ⊕
GB3 = UP	**X5** = ⊖
GB4 = DOWN	**X6** = Ⓡ
GB5 = OFF	**X7** = ⓘ
GB6 = ON	
GB15 = FORWARD	
GB16 = REVERSE	

① When ordering, specify inscription per catalog number suffix from the symbols library (see **Pages 77–84**) into the Order Notes. For example, M22-DP-R-ETCH; Order Notes: Mark with symbol X91, Line item #_.

Contact Blocks
K01 = NC
K10 = NO
K11 = NO-NC
K12 = 1NO-2NC

Note: Catalog Number Selection is for illustrative purposes only and not to be used to create new catalog numbers.

Product Selection

Mushroom Head Pushbuttons, Momentary ①

Complete Devices

	Bezel	Button Color	Contact Block Configuration	Catalog Number	Price U.S. $ ③
M22-DP-R-K01 	Silver	Red	NC	**M22-DP-R-K01**	26.25
			2NC	**M22-DP-R-K02**	36.25
			1NO-2NC	**M22-DP-R-K12**	46.00
			1NO-1NC	**M22-DP-R-K11**	36.25
M22S-DP-R-K01 	Black	Red	NC	**M22S-DP-R-K01**	24.60
			2NC	**M22S-DP-R-K02**	34.75
			1NO-2NC	**M22S-DP-R-K12**	44.50
			1NO-1NC	**M22S-DP-R-K11**	34.75

Operators Only ②

	Bezel	Button Color	Catalog Number	Price U.S. $ ③
M22-DP-G 	Silver	Black	**M22-DP-S**	16.10
		Red	**M22-DP-R**	16.10
		Green	**M22-DP-G**	16.10
		Yellow	**M22-DP-Y**	16.10
M22S-DP-G 	Black	Black	**M22S-DP-S**	14.60
		Red	**M22S-DP-R**	14.60
		Green	**M22S-DP-G**	14.60
		Yellow	**M22S-DP-Y**	14.60

Notes

① 35 mm diameter mushroom head button.
② Includes contact block mounting adapter.
③ Discount Symbol: **1CD1**.

Non-Illuminated Mushroom Head Pushbuttons, Momentary ①

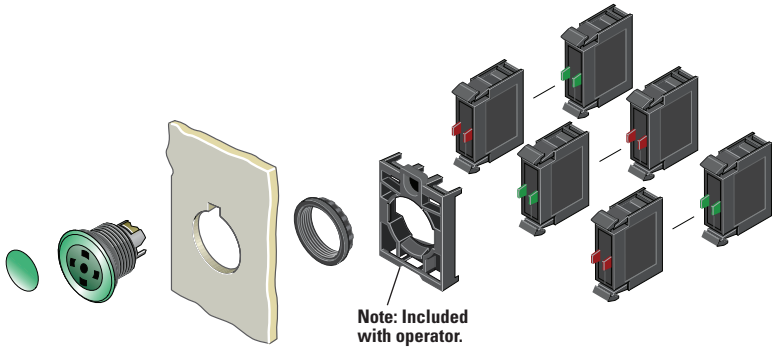

Components

Mushroom Head Plates

M22-XDP-G



Color	Inscription	Catalog Number	Price U.S. $ ⑤
Black	—	**M22-XDP-S** ②	1.00
	Custom	**M22-XDP-S-ETCH** ③	2.00
	STOP	**M22-XDP-S-GB0**	2.00
	START	**M22-XDP-S-GB1**	2.00
	FORWARD	**M22-XDP-S-GB15**	2.00
	REVERSE	**M22-XDP-S-GB16**	2.00
	UP	**M22-XDP-S-GB3**	2.00
	DOWN	**M22-XDP-S-GB4**	2.00
	OFF	**M22-XDP-S-GB5**	2.00
	ON	**M22-XDP-S-GB6**	2.00
	◎	**M22-XDP-S-X0**	2.00
	①	**M22-XDP-S-X1**	2.00
	⊕	**M22-XDP-S-X4**	2.00
	⊖	**M22-XDP-S-X5**	2.00
	↑	**M22-XDP-S-X7**	2.00
Red	—	**M22-XDP-R** ②	1.00
	Custom	**M22-XDP-R-ETCH** ③	2.00
	STOP	**M22-XDP-R-GB0**	2.00
	OFF	**M22-XDP-R-GB5**	2.00
	◎	**M22-XDP-R-X0**	2.00
Green	—	**M22-XDP-G** ②	1.00
	Custom	**M22-XDP-G-ETCH** ③	2.00
	START	**M22-XDP-G-GB1**	2.00
	ON	**M22-XDP-G-GB6**	2.00
	◎	**M22-XDP-G-X0**	2.00
	①	**M22-XDP-G-X1**	2.00
White	—	**M22-XDP-W** ②	1.00
	Custom	**M22-XDP-W-ETCH** ③	2.00
Yellow	—	**M22-XDP-Y** ②	1.00
	Custom	**M22-XDP-Y-ETCH** ③	2.00

Insertless Mushroom Head Operators

M22-DP-G-X



Bezel	Color	Catalog Number	Price U.S. $ ⑤
Silver	Black	**M22-DP-S-X**	15.10
	Red	**M22-DP-R-X**	15.10
	Green	**M22-DP-G-X**	15.10
	Yellow	**M22-DP-Y-X**	15.10
Black	Black	**M22S-DP-S-X**	13.60
	Red	**M22S-DP-R-X**	13.60
	Green	**M22S-DP-G-X**	13.60
	Yellow	**M22S-DP-Y-X**	13.60

Contact Blocks ④

M22-K10



Terminal Type	Contact Configuration	Catalog Number	Price U.S. $ ⑤
Screw	NO	**M22-K10**	10.00
	NO, Early-Make	**M22-K10P**	11.00
	NC	**M22-K01**	10.00
	NC, Late-Break	**M22-K01D**	11.00
Spring-Cage	NO	**M22-CK10**	13.00
	NC	**M22-CK01**	13.00
	NC, Late-Break	**M22-CK01D**	11.00
	2NO	**M22-CK20**	23.00
	2NC	**M22-CK02**	23.00
	NO-NC	**M22-CK11**	23.00

Notes

① 35 mm diameter mushroom head button.
② Minimum order quantity of (10).
③ When ordering, specify inscription per catalog number suffix from the symbols library (see **Pages 77–84**) into the Order Notes. For example, M22-XDP-S-ETCH; Order Notes: Mark with symbol X91, Line item #_.
④ For complete listing of available contact blocks, see Accessories, **Pages 59–64**.
⑤ Discount Symbol: **1CD1**.

Product Selection

Non-Illuminated Mushroom Head Pushbuttons, Maintained ① ②

Complete Devices

	Bezel	Button Color	Contact Block Configuration	Catalog Number	Price U.S. $ ③
M22-DRP-R-K01 	Silver	Red	NC	**M22-DRP-R-K01**	49.50
			2NC	**M22-DRP-R-K02**	59.50
			1NO-2NC	**M22-DRP-R-K12**	69.50
			1NO-1NC	**M22-DRP-R-K11**	59.50
M22S-DRP-R-K01 	Black	Red	NC	**M22S-DRP-R-K01**	48.00
			2NC	**M22S-DRP-R-K02**	58.00
			1NO-2NC	**M22S-DRP-R-K12**	68.00
			1NO-1NC	**M22S-DRP-R-K11**	58.00

Operators Only

	Bezel	Button Color	Catalog Number	Price U.S. $ ③
M22-DRP-G 	Silver	Black	**M22-DRP-S**	39.50
		Red	**M22-DRP-R**	39.50
		Green	**M22-DRP-G**	39.50
		Yellow	**M22-DRP-Y**	39.50
M22S-DRP-G 	Black	Black	**M22S-DRP-S**	38.00
		Red	**M22S-DRP-R**	38.00
		Green	**M22S-DRP-G**	38.00
		Yellow	**M22S-DRP-Y**	38.00

Notes

① 35 mm diameter mushroom head button.

② Maintained pushbuttons can be converted in the field to momentary operation by switching the locking ring, which is accessible through the side of the operator body.

③ Discount Symbol: **1CD1**.

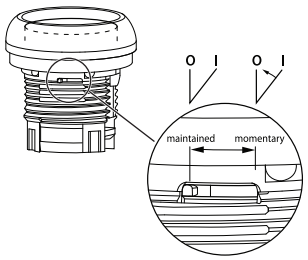

⊖ = Positively driven contact.

Note: This pilot device features a selectable function switch that enables the device to be set to either maintained or momentary operation.

Non-Illuminated Mushroom Head Pushbuttons, Maintained ①②

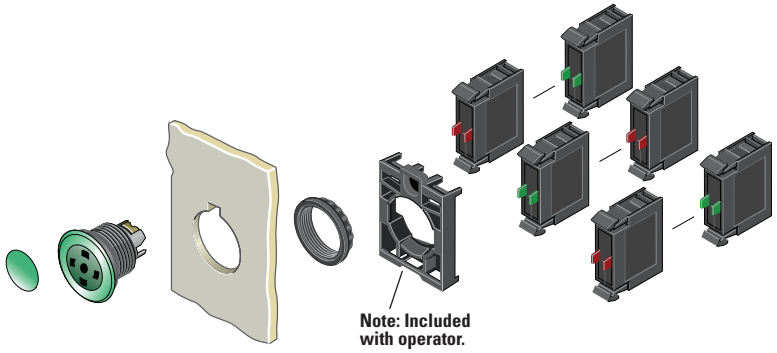

Components

Mushroom Head Plates ⑤

M22-XDP-G



Color	Inscription	Catalog Number	Price U.S. $ ⑥
Black	—	**M22-XDP-S** ③	1.00
	Custom	**M22-XDP-S-ETCH** ④	2.00
	STOP	**M22-XDP-S-GB0**	2.00
	START	**M22-XDP-S-GB1**	2.00
	FORWARD	**M22-XDP-S-GB15**	2.00
	REVERSE	**M22-XDP-S-GB16**	2.00
	UP	**M22-XDP-S-GB3**	2.00
	DOWN	**M22-XDP-S-GB4**	2.00
	OFF	**M22-XDP-S-GB5**	2.00
	ON	**M22-XDP-S-GB6**	2.00
	◎	**M22-XDP-S-X0**	2.00
	①	**M22-XDP-S-X1**	2.00
	⊕	**M22-XDP-S-X4**	2.00
	⊖	**M22-XDP-S-X5**	2.00
	↑	**M22-XDP-S-X7**	2.00
Red	—	**M22-XDP-R** ③	1.00
	Custom	**M22-XDP-R-ETCH** ④	2.00
	STOP	**M22-XDP-R-GB0**	2.00
	OFF	**M22-XDP-R-GB5**	2.00
	◎	**M22-XDP-R-X0**	2.00
Green	—	**M22-XDP-G** ③	1.00
	Custom	**M22-XDP-G-ETCH** ④	2.00
	START	**M22-XDP-G-GB1**	2.00
	ON	**M22-XDP-G-GB6**	2.00
	◎	**M22-XDP-G-X0**	2.00
	①	**M22-XDP-G-X1**	2.00
White	—	**M22-XDP-W** ③	1.00
	Custom	**M22-XDP-W-ETCH** ④	2.00
Yellow	—	**M22-XDP-Y** ③	1.00
	Custom	**M22-XDP-Y-ETCH** ④	2.00

Insertless Mushroom Head Operators

M22-DRP-G-X



Bezel	Color	Catalog Number	Price U.S. $ ⑥
Silver	Black	**M22-DRP-S-X**	38.50
	Red	**M22-DRP-R-X**	38.50
	Green	**M22-DRP-G-X**	38.50
	Yellow	**M22-DRP-Y-X**	38.50
Black	Black	**M22S-DRP-S-X**	37.00
	Red	**M22S-DRP-R-X**	37.00
	Green	**M22S-DRP-G-X**	37.00
	Yellow	**M22S-DRP-Y-X**	37.00

Contact Blocks ⑤

M22-K10



Terminal Type	Contact Configuration	Catalog Number	Price U.S. $ ⑥
Screw	NO	**M22-K10**	10.00
	NO, Early-Make	**M22-K10P**	11.00
	NC	**M22-K01**	10.00
	NC, Late-Break	**M22-K01D**	11.00
Spring-Cage	NO	**M22-CK10**	13.00
	NC	**M22-CK01**	13.00
	NC, Late-Break	**M22-CK01D**	11.00
	2NO	**M22-CK20**	23.00
	2NC	**M22-CK02**	23.00
	NO-NC	**M22-CK11**	23.00

Notes

① 35 mm diameter mushroom head button.

② Maintained pushbuttons can be converted in the field to momentary operation by switching the locking ring, which is accessible through the side of the operator body.

③ Minimum order quantity of (10).

④ When ordering, specify inscription per catalog number suffix from the symbols library (see **Pages 77–84**) into the Order Notes. For example, M22-XDP-S-ETCH; Order Notes: Mark with symbol X91, Line item #_.

⑤ For complete listing of available button plates and contact blocks, see Accessories, **Pages 59–64**.

⑥ Discount Symbol: **1CD1**.

Catalog Number Selection

Double Pushbuttons

M22 – DDL – GR – GB5 – K10 – G

Bezel
- **M22** = Silver
- **M22S** = Black

Operator Type
- **DDL** = Extended buttons and light
- **DDLF** = Flush buttons and light
- **DDLM** = Extended bottom button

Button Plate Color

	Top	Bottom
GR =	Green	Red
WS =	White	Black
S =	Black	Black

Inscription
- **GB0** = STOP
- **GB1** = START
- **GB3** = UP
- **GB4** = DOWN
- **GB5** = OFF
- **GB6** = ON
- **GB14** = RESET
- **GB15** = FORWARD
- **GB16** = REVERSE
- **X0** = ◎
- **X1** = ⓘ
- **X4** = ⊕
- **X5** = ⊖
- **X6** = Ⓡ
- **X7** = ⓣ
- **X5** = ⊘

Contact Blocks
- **K10** = 1NO
- **K01** = 1NC
- **K20** = 2NO
- **K02** = 2NC
- **K11** = 1NO-1NC
- **K30** = 3NO
- **K03** = 3NC
- **K21** = 2NO-1NC
- **K12** = 1NO-2NC

Light Units

12–30 Vac/dc
- **W** = White
- **R** = Red
- **G** = Green
- **B** = Blue

85–264 Vac
- **230W** = White
- **230R** = Red
- **230G** = Green
- **230B** = Blue

Note: Catalog Number Selection is for illustrative purposes only and not to be used to create new catalog numbers.

Product Selection

Components

Double Pushbuttons, Extended Pushbuttons and Center Light, Momentary

Operators Only ①

	Bezel	Color Top	Bottom	Inscription Top	Bottom	Catalog Number	Price U.S. $ ③
M22-DDL-GR-GB1-GB0 	Silver	Green	Red	—	—	**M22-DDL-GR**	30.75
				Custom	Custom	**M22-DDL-GR-ETCH** ②	31.75
				ⓘ	◎	**M22-DDL-GR-X1-X0**	31.75
				START	STOP	**M22-DDL-GR-GB1-GB0**	31.75
		White	Black	—	—	**M22-DDL-WS**	30.75
				Custom	Custom	**M22-DDL-WS-ETCH** ②	31.75
				ⓘ	◎	**M22-DDL-WS-X1-X0**	31.75
				START	STOP	**M22-DDL-WS-GB1-GB0**	31.75
		Black	Black	—	—	**M22-DDL-S**	30.75
				Custom	Custom	**M22-DDL-S-ETCH** ②	31.75
				—	—	**M22-DDL-S-X4-X5**	31.75
				ⓘ	ⓘ	**M22-DDL-S-X7-X7**	31.75
M22S-DDL-GR-X1-X0 	Black	Green	Red	—	—	**M22S-DDL-GR**	29.25
				Custom	Custom	**M22S-DDL-GR-ETCH** ②	30.25
				ⓘ	◎	**M22S-DDL-GR-X1-X0**	30.25
				START	STOP	**M22S-DDL-GR-GB1-GB0**	30.25
		White	Black	—	—	**M22S-DDL-WS**	29.25
				Custom	Custom	**M22S-DDL-WS-ETCH** ②	30.25
				ⓘ	◎	**M22S-DDL-WS-X1-X0**	30.25
				START	STOP	**M22S-DDL-WS-GB1-GB0**	30.25
		Black	Black	—	—	**M22S-DDL-S**	29.25
				Custom	Custom	**M22S-DDL-S-ETCH** ②	30.25
				⊕	—	**M22S-DDL-S-X4-X5**	30.25
				ⓘ	ⓘ	**M22S-DDL-S-X7-X7**	30.25

Notes

① Includes contact block mounting adapter.

② When ordering, specify inscription per catalog number suffix from the symbols library (see **Pages 77–84**) into the Order Notes. For example, M22-DDL-S-ETCH; Order Notes: Mark with symbol X91, Line item #_.

③ Discount Symbol: **1CD1**.

Double Pushbuttons, Flush Top Pushbuttons and Center Light, Momentary

Operators Only ①

	Bezel	Color Top	Bottom	Inscription Top	Bottom	Catalog Number	Price U.S. $ ③
M22-DDLF-GR 	Silver	Green	Red	—	—	**M22-DDLF-GR**	30.75
				Custom	Custom	**M22-DDLF-GR-ETCH** ②	31.75
		White	Black	—	—	**M22-DDLF-WS**	30.75
				Custom	Custom	**M22-DDLF-WS-ETCH** ②	31.75
		Green	Red	①	◎	**M22-DDLF-GR-X1-X0**	31.75
		White	Black	①	◎	**M22-DDLF-WS-X1-X0**	31.75
M22S-DDLF-GR-X1-X0 	Black	Green	Red	—	—	**M22S-DDLF-GR**	29.25
				Custom	Custom	**M22S-DDLF-GR-ETCH** ②	30.25
		White	Black	—	—	**M22S-DDLF-WS**	29.25
				Custom	Custom	**M22S-DDLF-WS-ETCH** ②	30.25
		Green	Red	①	◎	**M22S-DDLF-GR-X1-X0**	30.25
		White	Black	①	◎	**M22S-DDLF-WS-X1-X0**	30.25

Double Pushbuttons, Flush Top Pushbutton and Center Light, Extended Bottom Pushbutton, Momentary

Operators Only ①

	Bezel	Color Top	Bottom	Inscription Top	Bottom	Catalog Number	Price U.S. $ ③
M22-DDLM-GR 	Silver	Green	Red	—	—	**M22-DDLM-GR**	30.75
				Custom	Custom	**M22-DDLM-GR-ETCH** ②	31.75
		White	Black	—	—	**M22-DDLM-WS**	31.75
				Custom	Custom	**M22-DDLM-WS-ETCH** ②	31.75
		Green	Red	①	◎	**M22-DDLM-GR-X1-X0**	31.75
		White	Black	①	◎	**M22-DDLM-WS-X1-X0**	31.75
M22-DDLM-GR-X1-X0 	Black	Green	Red	—	—	**M22S-DDLM-GR**	29.25
				Custom	Custom	**M22S-DDLM-GR-ETCH** ②	30.25
		White	Black	—	—	**M22S-DDLM-WS**	30.25
				Custom	Custom	**M22S-DDLM-WS-ETCH** ②	30.25
		Green	Red	①	◎	**M22S-DDLM-GR-X1-X0**	30.25
		White	Black	①	◎	**M22S-DDLM-WS-X1-X0**	30.25

Notes

① Includes contact block mounting adapter.

② When ordering, specify inscription per catalog number suffix from the symbols library (see **Pages 77–84**) into the Order Notes. For example, M22-DDLM-GR-ETCH; Order Notes: Mark with symbol X91, Line item #_.

③ Discount Symbol: **1CD1**.

Double Pushbuttons

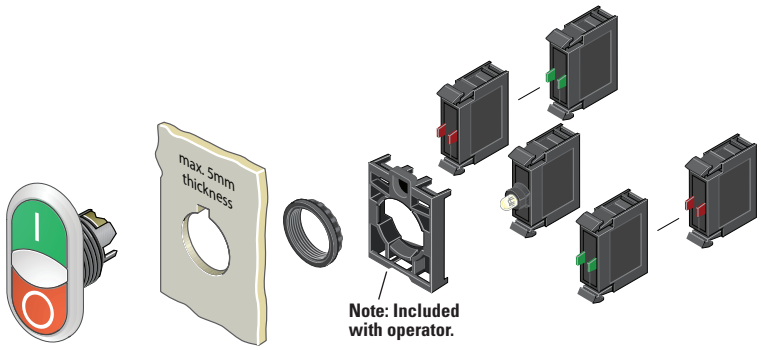

Light Units ①

M22-LED-W



Terminal Type	LED Color	Light Unit Voltage	Catalog Number	Price U.S. $ ②
Screw	White	12–30 Vac/dc	**M22-LED-W**	26.00
		85–264 Vac	**M22-LED230-W**	26.00

Contact Blocks ①

M22-K10



Terminal Type	Contact Configuration	Catalog Number	Price U.S. $ ②
Screw	NO	**M22-K10**	10.00
	NO, Early-Make	**M22-K10P**	11.00
	NC	**M22-K01**	10.00
	NC, Late-Break	**M22-K01D**	11.00
Spring-Cage	NO	**M22-CK10**	13.00
	NC	**M22-CK01**	13.00
	NC, Late-Break	**M22-CK01D**	11.00
	2NO	**M22-CK20**	23.00
	2NC	**M22-CK02**	23.00
	NO-NC	**M22-CK11**	23.00

Notes

① For complete listing of available light units and contact blocks, see Accessories, **Pages 59–64**.

② Discount Symbol: **1CD1**.

47

Catalog Number Selection

Four-Way Pushbuttons

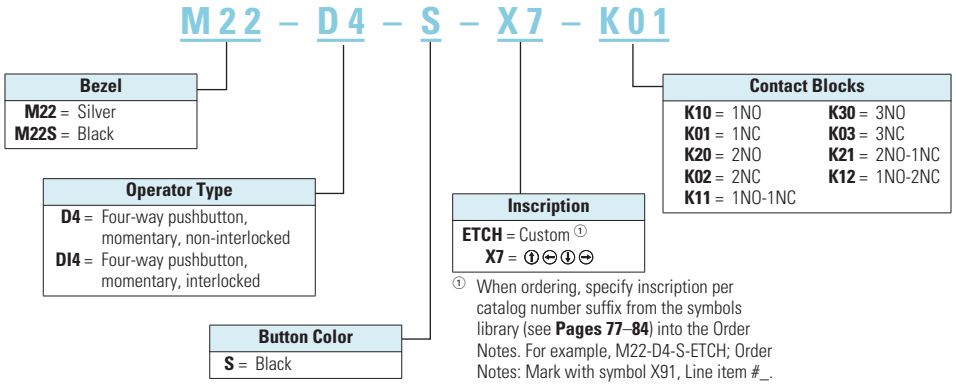

① When ordering, specify inscription per catalog number suffix from the symbols library (see **Pages 77–84**) into the Order Notes. For example, M22-D4-S-ETCH; Order Notes: Mark with symbol X91, Line item #_.

Note: Catalog Number Selection is for illustrative purposes only and not to be used to create new catalog numbers.

Product Selection

Four-Way Pushbuttons, Momentary

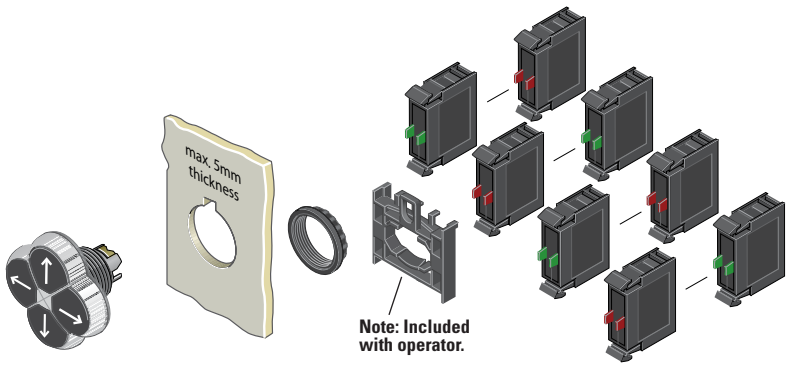

Components

Operators Only ①

M22-D4-S-X7



Type	Bezel	Color	Inscription	Catalog Number	Price U.S. $ ④
Non-Interlocked	Silver	Black	—	**M22-D4-S**	138.00
			Custom	**M22-D4-S-ETCH** ③	139.00
			Directional Arrows	**M22-D4-S-X7**	139.00
	Black	Black	—	**M22S-D4-S**	136.00
			Custom	**M22S-D4-S-ETCH** ③	137.00
			Directional Arrows	**M22S-D4-S-X7**	137.00
Interlocked	Silver	Black	—	**M22-DI4-S**	146.00
			Custom	**M22-DI4-S-ETCH** ③	147.00
			Directional Arrows	**M22-DI4-S-X7**	147.00
	Black	Black	—	**M22S-DI4-S**	144.00
			Custom	**M22S-DI4-S-ETCH** ③	145.00
			Directional Arrows	**M22S-DI4-S-X7**	145.00

Contact Blocks ②

M22-K10



Terminal Type	Contact Configuration	Catalog Number	Price U.S. $ ④
Screw	NO	**M22-K10**	10.00
	NO, Early-Make	**M22-K10P**	11.00
	NC	**M22-K01**	10.00
	NC, Late-Break	**M22-K01D**	11.00
Spring-Cage	NO	**M22-CK10**	13.00
	NC	**M22-CK01**	13.00
	NC, Late-Break	**M22-CK01D**	11.00
	2NO	**M22-CK20**	23.00
	2NC	**M22-CK02**	23.00
	NO-NC	**M22-CK11**	23.00

Notes

① Includes contact block mounting adapter.

② For complete listing of available contact blocks, see Accessories, **Pages 59–64**.

③ When ordering, specify inscription per catalog number suffix from the symbols library (see **Pages 77–84**) into the Order Notes. For example, M22-D4-S-ETCH; Order Notes: Mark with symbol X91, Line item #_.

④ Discount Symbol: **1CD1**.

Product Selection

Joysticks

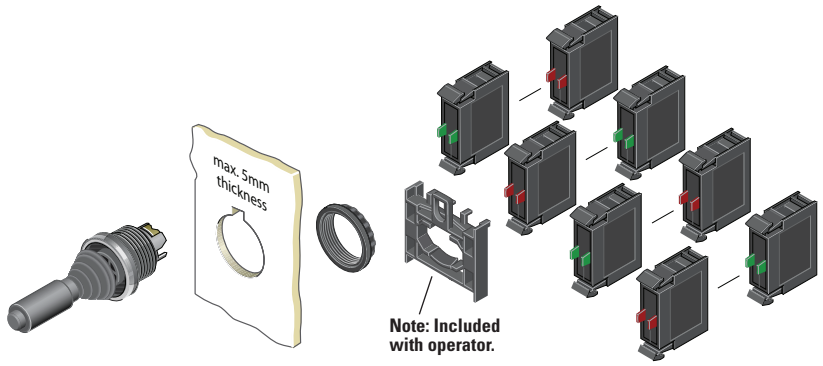

Components

Operators ①

M22-WJ2H



Bezel	Number of Directions	Switching Position	Catalog Number	Price U.S. $ ③
Silver	2-Position Horizontal	Momentary	**M22-WJ2H**	105.00
	2 Switch Points		**M22-WJ2H-2P**	117.00
	2-Position Horizontal	Maintained	**M22-WRJ2H**	105.00
	2-Position Vertical	Momentary	**M22-WJ2V**	105.00
	2 Switch Points		**M22-WJ2V-2P**	117.00
	2-Position Vertical	Maintained	**M22-WRJ2V**	105.00
	4-Position	Momentary	**M22-WJ4**	138.00
	2 Switch Points		**M22-WJ4-2P**	150.00
	4-Position	Maintained	**M22-WRJ4**	138.00
Black	2-Position Horizontal	Momentary	**M22S-WJ2H**	104.00
	2 Switch Points		**M22S-WJ2H-2P**	116.00
	2-Position Horizontal	Maintained	**M22S-WRJ2H**	104.00
	2-Position Vertical	Momentary	**M22S-WJ2V**	104.00
	2 Switch Points		**M22S-WJ2V-2P**	116.00
	2-Position Vertical	Maintained	**M22S-WRJ2V**	104.00
	4-Position	Momentary	**M22S-WJ4**	136.00
	2 Switch Points		**M22S-WJ4-2P**	148.00
	4-Position	Maintained	**M22S-WRJ4**	136.00

Contact Blocks ②

M22-K10



Terminal Type	Contact Configuration	Catalog Number	Price U.S. $ ③
Screw	NO	**M22-K10**	10.00
	NO, Early-Make	**M22-K10P**	11.00
	NC	**M22-K01**	10.00
	NC, Late-Break	**M22-K01D**	11.00
Spring-Cage	NO	**M22-CK10**	13.00
	NC	**M22-CK01**	13.00
	NC, Late-Break	**M22-CK01D**	11.00
	2NO	**M22-CK20**	23.00
	2NC	**M22-CK02**	23.00
	NO-NC	**M22-CK11**	23.00

Joystick with Double Contact

The joystick allows the control of up to four directions of movement on machines. Different variants of the joystick have 2/4 positions and other variants have two settings for each position. This allows, for example, two-speed settings for each direction. For this application, a standard normally open contact and an early-make contact are fitted in series. Momentary contact and latching contact versions are available.

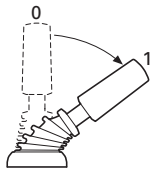

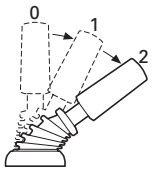

Notes

① Includes contact block mounting adapter.
② For complete listing of available contact blocks, see Accessories, **Pages 59–64**.
③ Discount Symbol: **1CD1**.

Product Selection

Potentiometers

M22-R10K



Complete Devices

Bezel	Resistance Rk	Catalog Number	Price U.S. $ ①
Silver	1	**M22-R1K**	126.00
	4.7	**M22-R4K7**	126.00
	10	**M22-R10K**	126.00
	47	**M22-R47K**	126.00
	100	**M22-R100K**	126.00
	470	**M22-R470K**	126.00
Black	1	**M22S-R1K**	124.00
	4.7	**M22S-R4K7**	124.00
	10	**M22S-R10K**	124.00
	47	**M22S-R47K**	124.00
	100	**M22S-R100K**	124.00
	470	**M22S-R470K**	124.00
Oversized Knob			
Silver	1	**M22-R1K-RH**	131.00
	4.7	**M22-R4K7-RH**	131.00
	10	**M22-R10K-RH**	131.00
	47	**M22-R47K-RH**	131.00
	100	**M22-R100K-RH**	131.00
	470	**M22-R470K-RH**	131.00
Black	1	**M22S-R1K-RH**	129.00
	4.7	**M22S-R4K7-RH**	129.00
	10	**M22S-R10K-RH**	129.00
	47	**M22S-R47K-RH**	129.00
	100	**M22S-R100K-RH**	129.00
	470	**M22S-R470K-RH**	129.00

Acoustic Devices

M22-AMC-XAM



Complete Devices

Description	Decibel Rating	Catalog Number	Price U.S. $ ①
Indicator with buzzer, black Continuous tone, 18–30 Vac/dc	83 dB/ 10 cm	**M22-AMC-XAM**	65.00
Indicator with buzzer, black Pulsed tone, 18–30 Vac/dc	83 dB/ 10 cm	**M22-AMC-XAMP**	65.00

M22-XAM



Buzzers

Description	Decibel Rating	Catalog Number	Price U.S. $ ①
Indicator without buzzer, black	83 dB/ 10 cm	**M22-AMC**	27.00
Buzzer only, Continuous tone, 18–30 Vac/dc	83 dB/ 10 cm	**M22-XAM**	38.00
Buzzer only, Pulsed tone, 18–30 Vac/dc	83 dB/ 10 cm	**M22-XAMP**	38.00

Note

① Discount Symbol: **1CD1**.

Through-the-Door Operators [1]

Complete Devices

M22-DZ-B-X6



Color	Inscription	Catalog Number	Price U.S. $ [7]
Blue	—	**M22-DZ-B**	17.20
	RESET	**M22-DZ-B-GB14**	18.20
	Ⓡ	**M22-DZ-B-X6**	18.20
Red	—	**M22-DZ-R**	17.20
	◎	**M22-DZ-R-X0**	18.20
	STOP	**M22-DZ-R-GB0**	18.20

Buttonless Operator

M22-DZ-X



Bezel	Catalog Number	Price U.S. $ [7]
Silver	**M22-DZ-X**	16.20

Button Plates [2]

M22-XD-B



Color	Inscription	Catalog Number	Price U.S. $ [7]
Blue	—	**M22-XD-B** [3]	1.00
	RESET	**M22-XD-B-GB14**	2.00
	Ⓡ	**M22-XD-B-X6**	2.00
Red	—	**M22-XD-R** [3]	1.00
	◎	**M22-XD-R-X0**	2.00
	STOP	**M22-XD-R-GB0**	2.00

Bulkhead Interfaces

USB Socket [4]

M22-USB-SA



Description	Catalog Number	Price U.S. $ [7]
Used for USB connection USB 2.0 Type A plug IP65 when closed IP20 when connected	**M22-USB-SA**	94.50

RJ45 Socket [5]

M22-RJ45-SA



Description	Catalog Number	Price U.S. $ [7]
Used for RJ45 Ethernet connection IP65 when closed IP20 when connected	**M22-RJ45-SA**	61.50

ASi Adapter Modules [6]

Complete Devices

M22-ASI



Description	Catalog Number	Price U.S. $ [7]
ASi adapter module	**M22-ASI**	167.00
ASi adapter module for base mounting	**M22-ASI-C**	170.00
ASi adapter module for E-Stop	**M22-ASI-CS**	213.00
ASi adapter module for E-Stop base mounting	**M22-ASI-S**	248.00

Notes

[1] The pushrod is 3.24 in long and can be cut to length.
[2] Any combination of plate color and inscription is available.
[3] Minimum order quantity of (10).
[4] USB interface is complete with 2-ft-long USB cable.
[5] RJ45 interface is an 8-wire connector.
[6] Available Q2 2009.
[7] Discount Symbol: **1CD1**.

Catalog Number Selection

Palm Switches, Type 4X/13 Enclosure ①

FAK – S – KC10 – I

Operator Type	Operator Color	Contact Blocks	Enclosure Top Color
FAK = Palm Switch	**S** = Black **R** = Red **Y** = Yellow	**KC10** = NO **KC01** = NC **CKC10** = NO **CKC01** = NC	**I** = Gray **IY** = Yellow

Note: Catalog Number Selection is for illustrative purposes only and not to be used to create new catalog numbers.

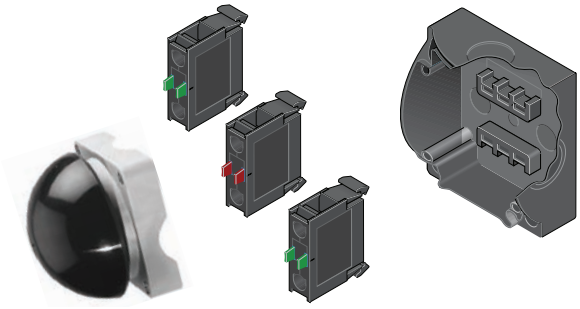

Product Selection

Complete Devices

Operator, Base and Contact Blocks ②

	Type	Button Color	Contact Block Configuration	Catalog Number	Price U.S. $ ③
FAK-S-KC11-I 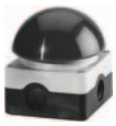	Momentary	Black	1NO-1NC	**FAK-S-KC11-I**	164.00
		Red	1NO-1NC	**FAK-R-KC11-I**	164.00
		Yellow	1NO-1NC	**FAK-Y-KC11-I**	164.00
FAK-R-V-KC01-IY 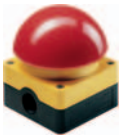	Maintained	Red	NC	**FAK-R-V-KC01-IY**	205.00
			2NC	**FAK-R-V-KC02-IY**	215.00
			1NO-2NC	**FAK-R-V-KC12-IY**	225.00
			1NO-1NC	**FAK-R-V-KC11-IY**	215.00

Components

Operators Only

	Type	Button Color	Catalog Number	Price U.S. $ ③
FAK-S 	Momentary	Black	**FAK-S**	108.00
		Red	**FAK-R**	108.00
		Yellow	**FAK-Y**	108.00
	Maintained	Red	**FAK-R-V-Y**	160.00

Palm Switch Enclosure Base

	Catalog Number	Price U.S. $ ③
FAK-IU 	**FAK-IU**	36.00

Contact Blocks ②

	Terminal Type	Contact Configuration	Catalog Number	Price U.S. $ ③
M22-KC10 	Screw	NO	**M22-KC10**	10.00
		NC	**M22-KC01**	10.00
	Spring-Cage	NO	**M22-CKC10**	13.00
		NC	**M22-CKC01**	13.00

Notes

① Available Q2 2009.
② For complete listing of available contact blocks, see Accessories, **Pages 59–64**.
③ Discount Symbol: **1CD1**.

Product Selection

Assembled Control Stations



1 Element Control Stations

Orientation	Description	Color	①	Inscription	Enclosure Cover Color	Catalog Number	Price U.S. $ ②
Horizontal	40 mm Mushroom Head Push-Pull Emergency Stop Operator	Red	NC	—	Yellow	**M22-C1-M1H**	90.00
Horizontal	40 mm Illuminated Mushroom Head Push-Pull Emergency Stop Operator, 85–264 Vac	Red	NO-NC	—	Yellow	**M22-C1-M2H**	126.00
Horizontal	40 mm Mushroom Head Twist-to-Release Emergency Stop Operator	Red	NC	—	Yellow	**M22-C1-M3H**	106.00
Horizontal	40 mm Mushroom Head Key-Release Emergency Stop Operator	Red	NC	—	Yellow	**M22-C1-M4H**	136.00
Horizontal	Flush Pushbutton	Green	NO	⏽	Gray	**M22-C1-M5H**	76.00
Horizontal	Flush Pushbutton	Green	NO	START	Gray	**M22-C1-M6H**	76.00
Horizontal	Extended Pushbutton	Red	NC	◎	Gray	**M22-C1-M7H**	76.00
Horizontal	Extended Pushbutton	Red	NC	STOP	Gray	**M22-C1-M8H**	76.00
Horizontal	Key-Operated Selector Switch, 2-position Maintained	—	NO	ON-OFF	Gray	**M22-C1-M9H**	121.00
Horizontal	Knob Type Selector Switch, 3-position Maintained	—	2NO	HAND-OFF-AUTO	Gray	**M22-C1-M10H**	94.50
Horizontal	Double Pushbutton	Green	NO	START	Gray	**M22-C1-M11H**	110.00
Horizontal	Double Pushbutton	Red	NC	STOP	Gray	**M22-C1-M11H**	110.00

47

2 Element Control Stations

Orientation	Element 1 Description	Color	①	Inscription	Element 2 Description	Color	①	Inscription	Enclosure Cover Color	Catalog Number	Price U.S. $ ②
Horizontal	Extended Pushbutton	Red	NC	◎	Flush Pushbutton	Green	NO	⏽	Gray	**M22-C2-M1H**	80.00
Vertical	Flush Pushbutton	Green	NO	START	Extended Pushbutton	Red	NC	STOP	Gray	**M22-C2-M2V**	80.00
Vertical	Flush Pushbutton	Black	NO	FORWARD	Flush Pushbutton	Black	NO	REVERSE	Gray	**M22-C2-M3V**	80.00

3 Element Control Stations

Orientation	Element 1 Description	Color	①	Inscription	Element 2 Description	Color	①	Inscription	Element 3 Description	Color	①	Inscription	Enclosure Cover Color	Catalog Number	Price U.S. $ ②
Horizontal	Extended Pushbutton	Red	NC	◎	Indicating Light	White	85–264 Vac	—	Flush Pushbutton	Green	NO	⏽	Gray	**M22-C3-M1H**	122.00
Vertical	Indicating Light	White	85–264 Vac	—	Flush Pushbutton	Green	NO	START	Extended Pushbutton	Red	NC	STOP	Gray	**M22-C3-M2V**	122.00
Horizontal	Flush Pushbutton	Green	NO	⏽	Extended Pushbutton	Red	NC	◎	Flush Pushbutton	Green	NO	⏸	Gray	**M22-C3-M3H**	122.00
Vertical	Flush Pushbutton	Black	NO	OPEN	Flush Pushbutton	Red	NC	STOP	Flush Pushbutton	Black	NO	CLOSE	Gray	**M22-C3-M4V**	102.00
Vertical	Flush Pushbutton	Black	NO	FORWARD	Flush Pushbutton	Red	NC	STOP	Flush Pushbutton	Black	NO	REVERSE	Gray	**M22-C3-M5V**	102.00
Vertical	Flush Pushbutton	Black	NO	UP	Flush Pushbutton	Red	NC	STOP	Flush Pushbutton	Black	NO	DOWN	Gray	**M22-C3-M6V**	102.00

Notes

① Contact block configuration.

② Discount Symbol: **1CD1**.

Accessories

Button Plates

M22-XD-S



M22-XDH-R



M22-XDP-G



Color	Inscription	Catalog Number Flush Pushbutton	Price U.S. $ ②	Catalog Number Extended Pushbutton	Price U.S. $ ②	Catalog Number Mushroom Head Button	Price U.S. $ ②
Black	—	**M22-XD-S**	1.00	**M22-XDH-S**	2.00	**M22-XDP-S**	1.00
White	—	**M22-XD-W**	1.00	**M22-XDH-W**	2.00	**M22-XDP-W**	1.00
Red	—	**M22-XD-R**	1.00	**M22-XDH-R**	2.00	**M22-XDP-R**	1.00
Green	—	**M22-XD-G**	1.00	**M22-XDH-G**	2.00	**M22-XDP-G**	1.00
Yellow	—	**M22-XD-Y**	1.00	**M22-XDH-Y**	2.00	**M22-XDP-Y**	1.00
Blue	—	**M22-XD-B**	1.00	**M22-XDH-B**	2.00	—	—
Black, White, Red, Green, Yellow, Blue	—	**M22-XD-SWRGYB**	5.00	**M22-XDH-SWRGYB**	10.00	—	—
Black, Red, Green	—	**M22-XD-SRG**	2.50	**M22-XDH-SRG**	5.00	—	—
Black	Custom	**M22-XD-S-ETCH**	2.00	**M22-XDH-S-ETCH**	3.00	**M22-XDP-S-ETCH**	2.00
White	Custom	**M22-XD-W-ETCH**	2.00	**M22-XDH-W-ETCH**	3.00	**M22-XDP-W-ETCH**	2.00
Red	Custom	**M22-XD-R-ETCH**	2.00	**M22-XDH-R-ETCH**	3.00	**M22-XDP-R-ETCH**	2.00
Green	Custom	**M22-XD-G-ETCH**	2.00	**M22-XDH-G-ETCH**	3.00	**M22-XDP-G-ETCH**	2.00
Yellow	Custom	**M22-XD-Y-ETCH**	2.00	**M22-XDH-Y-ETCH**	3.00	**M22-XDP-Y-ETCH**	2.00
Blue	Custom	**M22-XD-B-ETCH**	2.00	**M22-XDH-B-ETCH**	3.00	—	—
Black	STOP	**M22-XD-S-GB0**	2.00	**M22-XDH-S-GB0**	3.00	**M22-XDP-S-GB0**	2.00
Red	STOP	**M22-XD-R-GB0**	2.00	**M22-XDH-R-GB0**	3.00	**M22-XDP-R-GB0**	2.00
Black	START	**M22-XD-S-GB1**	2.00	**M22-XDH-S-GB1**	3.00	**M22-XDP-S-GB1**	2.00
White	START	**M22-XD-W-GB1**	2.00	**M22-XDH-W-GB1**	3.00	—	—
Green	START	**M22-XD-G-GB1**	2.00	**M22-XDH-G-GB1**	3.00	**M22-XDP-G-GB1**	2.00
Black	CLOSE	**M22-XD-S-GB2**	2.00	**M22-XDH-S-GB2**	3.00	—	—
Black	UP	**M22-XD-S-GB3**	2.00	**M22-XDH-S-GB3**	3.00	**M22-XDP-S-GB3**	2.00
Black	DOWN	**M22-XD-S-GB4**	2.00	**M22-XDH-S-GB4**	3.00	**M22-XDP-S-GB4**	2.00
Black	OFF	**M22-XD-S-GB5**	2.00	**M22-XDH-S-GB5**	3.00	**M22-XDP-S-GB5**	2.00
Red	OFF	**M22-XD-R-GB5**	2.00	**M22-XDH-R-GB5**	3.00	**M22-XDP-R-GB5**	2.00
Black	ON	**M22-XD-S-GB6**	2.00	**M22-XDH-S-GB6**	3.00	**M22-XDP-S-GB6**	2.00
Green	ON	**M22-XD-G-GB6**	2.00	**M22-XDH-G-GB6**	3.00	**M22-XDP-G-GB6**	2.00
Black	TEST	**M22-XD-S-GB9**	2.00	**M22-XDH-S-GB9**	3.00	—	—
Blue	RESET	**M22-XD-B-GB14**	2.00	**M22-XDH-B-GB14**	3.00	—	—
Black	FORWARD	**M22-XD-S-GB15**	2.00	**M22-XDH-S-GB15**	3.00	**M22-XDP-S-GB15**	2.00
Black	REVERSE	**M22-XD-S-GB16**	2.00	**M22-XDH-S-GB16**	3.00	**M22-XDP-S-GB16**	2.00
Black	RAISE	**M22-XD-S-GB17**	2.00	**M22-XDH-S-GB17**	3.00	—	—
Black	LOWER	**M22-XD-S-GB18**	2.00	**M22-XDH-S-GB18**	3.00	—	—
Black	◎	**M22-XD-S-X0**	2.00	**M22-XDH-S-X0**	3.00	**M22-XDP-S-X0**	2.00
Red	◎	**M22-XD-R-X0**	2.00	**M22-XDH-R-X0**	3.00	**M22-XDP-R-X0**	2.00
Green	◎	—	—	—	—	**M22-XDP-G-X0**	2.00
Black	①	**M22-XD-S-X1**	2.00	**M22-XDH-S-X1**	3.00	**M22-XDP-S-X1**	2.00
White	①	**M22-XD-W-X1**	2.00	**M22-XDH-W-X1**	3.00	—	—
Green	①	**M22-XD-G-X1**	2.00	**M22-XDH-G-X1**	3.00	**M22-XDP-G-X1**	2.00
Black	⑪	**M22-XD-S-X2**	2.00	**M22-XDH-S-X2**	3.00	—	—
Green	⑪	**M22-XD-G-X2**	2.00	**M22-XDH-G-X2**	3.00	—	—
Black	⊕	**M22-XD-S-X4**	2.00	**M22-XDH-S-X4**	3.00	**M22-XDP-S-X4**	2.00
Black	⊖	**M22-XD-S-X5**	2.00	**M22-XDH-S-X5**	3.00	**M22-XDP-S-X5**	2.00
Blue	RESET	**M22-XD-B-X6**	2.00	**M22-XDH-B-X6**	3.00	—	—
Black	↑	**M22-XD-S-X7**	2.00	**M22-XDH-S-X7**	3.00	**M22-XDP-S-X7**	2.00
Black	↑	**M22-XD-S-X8**	2.00	**M22-XDH-S-X8**	3.00	—	—
Black	See ① below	**M22-XD-S-X9**	2.00	**M22-XDH-S-X9**	3.00	—	—
Black	See ① below	**M22-XD-S-X10**	2.00	**M22-XDH-S-X10**	3.00	—	—
Black	See ① below	**M22-XD-S-X11**	2.00	**M22-XDH-S-X11**	3.00	—	—
Black	See ① below	**M22-XD-S-X12**	2.00	**M22-XDH-S-X12**	3.00	—	—
Black	See ① below	**M22-XD-S-X13**	2.00	**M22-XDH-S-X13**	3.00	—	—
Black	See ① below	**M22-XD-S-X14**	2.00	**M22-XDH-S-X14**	3.00	—	—
Black	See ① below	**M22-XD-S-X15**	2.00	**M22-XDH-S-X15**	3.00	—	—
Black	See ① below	**M22-XD-S-X16**	2.00	**M22-XDH-S-X16**	3.00	—	—
Black	See ① below	**M22-XD-S-X17**	2.00	**M22-XDH-S-X17**	3.00	—	—

Notes

① Refer to the Symbols Library, **Pages 77–84**, for symbol image.

② Discount Symbol: **1CD1**.

Button Lenses

M22-XDLH-W

M22-XDL-G



Color	Inscription	Catalog Number Flush	Price U.S. $ ①	Catalog Number Extended	Price U.S. $ ①
White	—	**M22-XDL-W**	1.40	**M22-XDLH-W**	2.40
Red	—	**M22-XDL-R**	1.40	**M22-XDLH-R**	2.40
Green	—	**M22-XDL-G**	1.40	**M22-XDLH-G**	2.40
Yellow	—	**M22-XDL-Y**	1.40	**M22-XDLH-Y**	2.40
Blue	—	**M22-XDL-B**	1.40	**M22-XDLH-B**	2.40
White	Custom	**M22-XDL-W-ETCH**	2.40	**M22-XDLH-W-ETCH**	3.40
Red	Custom	**M22-XDL-R-ETCH**	2.40	**M22-XDLH-R-ETCH**	3.40
Green	Custom	**M22-XDL-G-ETCH**	2.40	**M22-XDLH-G-ETCH**	3.40
Yellow	Custom	**M22-XDL-Y-ETCH**	2.40	**M22-XDLH-Y-ETCH**	3.40
Blue	Custom	**M22-XDL-B-ETCH**	2.40	**M22-XDLH-B-ETCH**	3.40
Red	STOP	**M22-XDL-R-GB0**	2.40	**M22-XDLH-R-GB0**	3.40
Green	START	**M22-XDL-G-GB1**	2.40	**M22-XDLH-G-GB1**	3.40
Red	OFF	**M22-XDL-R-GB5**	2.40	**M22-XDLH-R-GB5**	3.40
Green	ON	**M22-XDL-G-GB6**	2.40	**M22-XDLH-G-GB6**	3.40
Blue	RESET	**M22-XDL-B-GB14**	2.40	**M22-XDLH-B-GB14**	3.40
Red	◎	**M22-XDL-R-X0**	2.40	**M22-XDLH-R-X0**	3.40
Green	ⓘ	**M22-XDL-G-X1**	2.40	**M22-XDLH-G-X1**	3.40
Blue	Ⓡ	**M22-XDL-B-X6**	2.40	**M22-XDLH-B-X6**	3.40

Contact Block Mounting Adapter

M22-A



M22-A4



Description	Catalog Number	Price U.S. $ ①
Mounting Adapter	**M22-A**	2.90
Mounting Adapter, 4-Position	**M22-A4**	5.60

Contact Blocks

M22-K10



Mounting Location	Terminal Type	Contact Configuration	Package Qty.	Catalog Number	Price U.S. $ ①
Front	Screw	NO	1	**M22-K10**	10.00
		NO	25	**M22-K10-B25**	250.00
		NO	100	**M22-K10-B100**	1,000.00
		NO, Early-Make	1	**M22-K10P**	11.00
		NC	1	**M22-K01**	10.00
		NC	25	**M22-K01-B25**	250.00
		NC	100	**M22-K01-B100**	1,000.00
		NC, Late-Break	1	**M22-K01D**	11.00
Base		NO	1	**M22-KC10**	10.00
		NC	1	**M22-KC01**	10.00
		NO	25	**M22-KC10-B25**	250.00
		NO	100	**M22-KC10-B100**	1,000.00
		NC	25	**M22-KC01-B25**	250.00
		NC	100	**M22-KC01-B100**	1,000.00
Front	Spring-Cage	NO	1	**M22-CK10**	13.00
		NC	1	**M22-CK01**	13.00
		NC, Late-Break	1	**M22-CK01D**	11.00
		2NO	1	**M22-CK20**	23.00
		2NC	1	**M22-CK02**	23.00
		NO-NC	1	**M22-CK11**	23.00
Base		NO	1	**M22-CKC10**	13.00
		NC	1	**M22-CKC01**	13.00

Note

① Discount Symbol: **1CD1**.

Light Units

M22-LED-W



Terminal Type	Mounting Location	LED Color	Light Unit Voltage	Catalog Number	Price U.S. $ ①
Screw	Front	White	12–30 Vac/dc	**M22-LED-W**	26.00
		Red		**M22-LED-R**	26.00
		Green		**M22-LED-G**	26.00
		Blue		**M22-LED-B**	26.00
		White	85–264 Vac	**M22-LED230-W**	26.00
		Red		**M22-LED230-R**	26.00
		Green		**M22-LED230-G**	26.00
		Blue		**M22-LED230-B**	26.00
		White	207–264 Vac	**M22-LED230H-W**	26.00
		Red		**M22-LED230H-R**	26.00
		Green		**M22-LED230H-G**	26.00
		Blue		**M22-LED230H-B**	26.00
	Base	White	12–30 Vac/dc	**M22-LEDC-W**	26.00
		Red		**M22-LEDC-R**	26.00
		Green		**M22-LEDC-G**	26.00
		Blue		**M22-LEDC-B**	26.00
		White	85–264 Vac	**M22-LEDC230-W**	26.00
		Red		**M22-LEDC230-R**	26.00
		Green		**M22-LEDC230-G**	26.00
		Blue		**M22-LEDC230-B**	26.00
		White	207–264 Vac	**M22-LEDC230H-W**	26.00
		Red		**M22-LEDC230H-R**	26.00
		Green		**M22-LEDC230H-G**	26.00
		Blue		**M22-LEDC230H-B**	26.00
Spring-Cage	Front	White	12–30 Vac/dc	**M22-CLED-W**	28.00
		Red		**M22-CLED-R**	28.00
		Green		**M22-CLED-G**	28.00
		Blue		**M22-CLED-B**	28.00
		White	85–264 Vac	**M22-CLED230-W**	28.00
		Red		**M22-CLED230-R**	28.00
		Green		**M22-CLED230-G**	28.00
		Blue		**M22-CLED230-B**	28.00
	Base	White	12–30 Vac/dc	**M22-CLEDC-W**	28.00
		Red		**M22-CLEDC-R**	28.00
		Green		**M22-CLEDC-G**	28.00
		Blue		**M22-CLEDC-B**	28.00
		White	85–264 Vac	**M22-CLEDC230-W**	28.00
		Red		**M22-CLEDC230-R**	28.00
		Green		**M22-CLEDC230-G**	28.00
		Blue		**M22-CLEDC230-B**	28.00

LED Resistor and Test Elements

M22-XLED60



Terminal Type	Mounting Location	Element Type	Voltage	Catalog Number	Price U.S. $ ①
Screw	Front	Resistor	42–60 Vac/dc	**M22-XLED60**	23.40
			220 Vdc	**M22-XLED220**	63.00
		Test	12–240 Vac/dc	**M22-XLED-T**	23.40
			85–264 Vac	**M22-XLED230-T**	34.25

Note

① Discount Symbol: **1CD1**.

Legend Plate Holders and Inserts, Pushbuttons and Double Pushbuttons

	Description	Inscription	Catalog Number	Price U.S. $ ②
M22S-ST-X 	Legend plate holder, without legend plate insert, for pushbuttons	—	**M22S-ST-X**	1.40
	Legend plate holder, without legend plate insert, for double pushbuttons	—	**M22S-STDD-X**	5.00
M22-XST-GB0 	Legend plate insert	—	**M22-XST**	1.40
		—	**M22-XST-ETCH** ①	2.40
		STOP	**M22-XST-GB0**	2.40
		START	**M22-XST-GB1**	2.40
		OFF	**M22-XST-GB5**	2.40
		ON	**M22-XST-GB6**	2.40
		RUN	**M22-XST-GB7**	2.40
		FAULT	**M22-XST-GB8**	2.40
		OFF ON	**M22-XST-GB10**	2.40
		MAN. AUTO	**M22-XST-GB11**	2.40
		HAND O AUTO	**M22-XST-GB12**	2.40
		HAND AUTO	**M22-XST-D11**	2.40
		MAN. O AUTO	**M22-XST-D12**	2.40
		1	**M22-XST-X52**	2.40
		2	**M22-XST-X53**	2.40
		O I	**M22-XST-X88**	2.40
		O - I	**M22-XST-X89**	2.40
		I O II	**M22-XST-X93**	2.40

Notes

① When ordering, specify inscription per catalog number suffix from the symbols library (see **Pages 77**–**84**) into the Order Notes. For example, M22-XD-S-ETCH; Order Notes: Mark with symbol X91, Line item #_.

② Discount Symbol: **1CD1**.

Example

To order a legend plate for a pushbutton with non-standard markings (FORWARD):

1. Select legend plate holder—M22S-ST-X.
2. Select legend plate insert—M22-XST-ETCH.
3. Select FORWARD from the symbols library, **Page 77**, identified by GB15 suffix.
4. Indicate on the order form in the order notes—suffix GB15, line item # ___ .

Legend Plates, Complete

	Description		Inscription	Catalog Number	Price U.S. $ ②
M22S-ST-GB0 	For use with Pushbuttons and Indicating Lights	Legend plate holder with insert	STOP	**M22S-ST-GB0**	3.80
			START	**M22S-ST-GB1**	3.80
			OFF	**M22S-ST-GB5**	3.80
			ON	**M22S-ST-GB6**	3.80
			RUN	**M22S-ST-GB7**	3.80
			FAULT	**M22S-ST-GB8**	3.80
			1	**M22S-ST-X52**	3.80
			2	**M22S-ST-X53**	3.80
	Selector Switches	—	OFF ON	**M22S-ST-GB10**	3.80
			MAN. AUTO	**M22S-ST-GB11**	3.80
			HAND O AUTO	**M22S-ST-GB12**	3.80
			HAND AUTO	**M22S-ST-D11**	3.80
			MAN. O AUTO	**M22S-ST-D12**	3.80
			O I	**M22S-ST-X88**	3.80
			O - I	**M22S-ST-X89**	3.80
			I O II	**M22S-ST-X93**	3.80
M22-XZK 	Emergency-Stop Operators	Rectangular Yellow Legend Plate	—	**M22-XZK**	5.25
			Custom	**M22-XZK-ETCH** ①	6.25
			EMERGENCY-STOP	**M22-XZK-GB99**	6.25
M22-XYK 		Square Yellow Legend Plate	Custom	**M22-XYK**	5.25
			Custom	**M22-XYK-ETCH** ①	6.25
			EMERGENCY-STOP 4-Language	**M22-XYK1**	6.25
			EMERGENCY-STOP (top and bottom)	**M22-XYK5**	6.25
		Round Yellow Legend Plate, 90 mm	—	**M22-XAK**	5.25
			Custom	**M22-XAK-ETCH** ①	6.25
			EMERGENCY-STOP 4-Language	**M22-XAK1**	6.25
			EMERGENCY-STOP (top and bottom)	**M22-XAK5**	6.25
M22-XBK1 		Round Yellow Legend Plate, 60 mm	—	**M22-XBK**	5.25
			Custom	**M22-XBK-ETCH** ①	6.25
			EMERGENCY-STOP 4-Language	**M22-XBK1**	6.25
			EMERGENCY-STOP (top and bottom)	**M22-XBK5**	6.25
M22-XCK1 	Four-Way Pushbutton, Joystick and 4-Position Selector Switches	Silver Square Legend Plate	—	**M22-XCK**	7.75
			Custom	**M22-XCK-ETCH** ①	8.75
			4 Directional Arrows	**M22-XCK1**	8.75
			0-1-0-2-0-3-0-4	**M22-XCK2**	8.75
			2 Directional Arrows	**M22-XCK3**	8.75

Notes

① When ordering, specify inscription per catalog number suffix from the symbols library (see **Pages 77–84**) into the Order Notes. For example, M22-XD-S-ETCH; Order Notes: Mark with symbol X91, Line item #_.

② Discount Symbol: **1CD1**.

Surface Mounting Enclosures

M22-IY1-PG

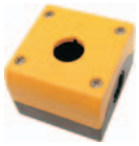

Description	Catalog Number	Price U.S. $ ③
Yellow Top, Black Base for Emergency-Stop Operators	**M22-IY1-PG**	63.50
1 Element Enclosure	**M22-I1-PG**	59.00
2 Element Enclosure	**M22-I2-PG**	64.00
3 Element Enclosure	**M22-I3-PG**	70.00
4 Element Enclosure	**M22-I4-PG**	78.00
6 Element Enclosure	**M22-I6-PG**	92.50
M20 Connecting Screw	**M22-XI**	8.00
M20 Cord Grip	**V-M20**	8.00

Flush Mounting Plates, Aluminum

M22-EY1



Finish	Rating	Catalog Number	Price U.S. $ ③
1 Hole			
Yellow Paint for Emergency-Stop Operators	—	**M22-EY1**	39.00
Gray Anodized	IP65	**M22-E1**	35.00
2 Holes			
Gray Anodized	IP65	**M22-E2**	46.00
3 Holes			
Gray Anodized	IP65	**M22-E3**	51.00
4 Holes			
Gray Anodized	IP65	**M22-E4**	66.00
5 Holes			
Gray Anodized	IP65	**M22-E5**	78.00
6 Holes			
Anodized	IP40	**M22-E6**	94.00

Shrouds, Plastic

M22-H1



Description	Rating	Catalog Number	Price U.S. $ ③
1-Element	IP55	**M22-H1**	12.00
2-Element	IP55	**M22-H2**	25.00
3-Element	IP55	**M22-H3**	39.00
4-Element	IP40	**M22-H4**	53.00
5-Element	IP40	**M22-H5**	65.00
6-Element	IP40	**M22-H6**	79.00
Mounting Plate	—	**M22-XE5**	13.00
Plaster Keys for Flush Mounting	—	**M22-UPE**	12.00

Selector Switch Accessories

M22-XW



Description	Catalog Number	Price U.S. $ ③
Plunger Bridge ①	**M22-XW**	4.00

M22-XWS



Description	Catalog Number	Price U.S. $ ③
Key Cover	**M22-XWS**	10.00

M22-XC-R



Description	Catalog Number	Price U.S. $ ③
Key Withdraw Adapter ②	**M22-XC-R**	4.00

M22-XC-Y



Description	Catalog Number	Price U.S. $ ③
Coding Adapter	**M22-XC-Y**	4.00

Emergency Stop Operator Accessories

M22-XGWK



Description	Catalog Number	Price U.S. $ ③
Guard Ring	**M22-XGWK**	11.25

M22-XGPV



Description	Catalog Number	Price U.S. $ ③
Yellow Guard Ring	**M22-XGPV**	16.25

M22G-XGPV



Description	Catalog Number	Price U.S. $ ③
Gray Guard Ring	**M22G-XGPV**	16.25
Sealing Shroud	**M22-PL-PV**	22.00

Blanking Plugs

M22-B



Color	Catalog Number	Price U.S. $ ③
Gray	**M22-B**	3.70
Black	**M22S-B**	3.70

Notes

① Plunger needed to actuate center-mounted contact blocks. Used for non-illuminated 3-position selector switches only.

② Enables a keyed selector switch to be set to user-selected key withdraw position.

③ Discount Symbol: **1CD1**.

Mounting Accessories

	Description	Catalog Number	Price U.S. $ [1]
M22-TC and M22-TA 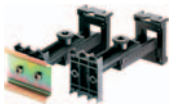	Telescopic Clip with Top-Hat Rail	**M22-TC**	10.85
	Telescopic Clip	**M22-TA**	19.50
	Telescopic Clip Extension	**M22-TCV**	3.70
M22-IVS 	DIN Rail Mounting Adapter	**M22-IVS**	7.80
M22-GR 	Mounting Ring	**M22-GR**	2.25
M22-MS 	Mounting Ring Tool	**M22-MS**	7.80
	Adapter Ring Set for 30 mm Holes	**M22S-R30**	3.75

Protective Diaphragm

	For Use with …	Catalog Number	Price U.S. $ [1]
M22-T-D and M22-T-DD 	Flush Pushbuttons and Indicating Lights	**M22-T-D**	4.45
	Double Pushbuttons	**M22-T-DD**	4.95

Dust Covers

	Description	Catalog Number	Price U.S. $ [1]
M22-ADC4 	Contact Block Dust Cover	**M22-XKDP**	1.15
	Operator Dust Cover, Max 3 Contact Blocks	**M22-ADC**	19.45
	Operator Dust Cover, Max 4 Contact Blocks	**M22-ADC4**	19.45

Kits

Description	Catalog Number	Price U.S. $ [1]
Includes one each: M22-XW, M22-XC-R, M22-XC-Y, M22S-B, M22-A, M22-XD-SWRGYB	**M22-KT1**	20.90

Note

[1] Discount Symbol: **1CD1**.

Coding Adapter Guide

Selector Switches

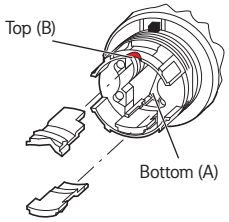

2-Position Selector Switch

Top (B)	Bottom (A)	Catalog Number	Function
		M22(S)-W(L)(K)	Momentary
		M22(S)-WR(L)(K)	Maintained

3-Position Selector Switch

Top (B)	Bottom (A)	Catalog Number	Function Left	Right
		M22(S)-W(L)(K)3	Momentary	Momentary
		M22(S)-WR(L)(K)3	Maintained	Maintained
		M22(S)-WR(L)(K)3-1	Maintained	Momentary
		M22(S)-WR(L)(K)3-2	Momentary	Maintained

2-Position Key-Operated Selector Switch

Top (B)	Bottom (A)	Catalog Number	Center Key Withdraw	Right Function	Key Withdraw
		M22(S)-WS	Yes	Momentary	No
		M22(S)-WRS	Yes	Maintained	Yes
		M22(S)-WRS-A1	Yes	Maintained	No

3-Position Key-Operated Selector Switch

Top (B)	Bottom (A)	Catalog Number	Left Function	Key Withdraw	Center Key Withdraw	Right Function	Key Withdraw
		M22(S)-WS3	Momentary	No	Yes	Momentary	No
		M22(S)-WRS3	Maintained	Yes	Yes	Maintained	Yes
		M22(S)-WRS3-A1	Maintained	No	Yes	Maintained	No
		M22(S)-WRS3-A2	Maintained	Yes	Yes	Maintained	No
		M22(S)-WRS3-A3	Maintained	No	Yes	Maintained	Yes
		M22(S)-WRS3-A4	Maintained	Yes	Yes	Momentary	No
		M22(S)-WRS3-A5	Maintained	No	Yes	Momentary	No
		M22(S)-WRS3-A6	Momentary	No	Yes	Maintained	Yes
		M22(S)-WRS3-A7	Momentary	No	Yes	Maintained	No

Technical Data and Specifications

Pushbuttons, Indicating Lights, Selector Switches and Emergency-Stop Operators

			Momentary Pushbuttons	Maintained Pushbuttons	Indicating Lights, Buzzers and Potentiometers	Emergency-Stop Operators	Selector Switches	Key-Operated Operators	Double Pushbuttons
General									
Standards			IEC/EN 60947 VDE 0660	IEC/EN 60947 VDE 0660	IEC/EN 60947 VDE 0660	IEC/EN 60947 VDE 0660	IEC/EN 60947 VDE 0660	IEC/EN 60947 VDE 0660	IEC/EN 60947 VDE 0660
Lifespan, mechanical	Operations	x 10^6	>5	>1	—	>0.1	>0.1	>0.1	>0.2
Operating frequency	Operations/h		≥3600	≥1800	—	≥600	≥2000	≥100	≥3600
Actuating force		n	≥5	≥5	—	≥50	–	—	≥5
Operating torque (screw terminals)		Nm	—	—	—	—	≥0.3	≥0.5	—
Protection Type									
IP			IP67, IP69K	IP67, IP69K	Indicating lights: IP67, 69K Buzzers: IP40 Potentiometers: IP66	IP67, IP69K	IP66	IP66	IP66
UL Type			4X, 13	4X, 13	Indicating lights: 4X/13 Buzzers: 12 Potentiometers: 4X/13	4X, 13	4X, 13	4X, 13	4X, 13
Climatic proofing			Damp heat, constant, according to IEC 60068-2-78 Damp heat, cyclical to IEC 60068-2-30						
Ambient Temperature, Operating		°F (°C)	–13–158 (–25–70)	–13–158 (–25–70)	–13–158 (–25–70)	–13–158 (–25–70)	–13–158 (–25–70)	–13–158 (–25–70)	–13–158 (–25–70)
Mounting position			As required	As required	As required	As required	As required	As required	As required
Mechanical shock resistance to IEC 60068-2-27 Shock duration 11 ms, half-sinusoidal		g	>30	>30	>30	>50	>30	>30	>30
Terminal Capacities									
Solid		AWG	—	—	20-16	—	—	—	—
		mm^2		—	0.5–1.5	—		—	
Stranded		AWG	—	—	20-16	—	—	—	—
		mm^2		—	0.5–1.5	—		—	
Contacts									
Rated impulse withstand voltage	U_{imp}	Vac	—	—	4000	—	—	—	—
Rated insulation voltage	U_i	V	—	—	2500	—	—	—	—
Overvoltage category/ pollution degree			—	—	III/3	—	—	—	—

Contact Blocks and Light Units

			Contact Blocks	LED Light Units
General				
Standards			IEC/EN 60947 VDE 0660	IEC/EN 60947 VDE 0660
Lifespan, mechanical	Operations	x 10^6	>5	—
Operating frequency	Operations/h		≥3600	—
Actuating force		n	≥5	—
Operating torque (screw terminals)		Nm	≥0.8	—
Protection Type				
IP			IP20	IP20
UL Type			—	—
Climatic proofing			Damp heat, constant, according to IEC 60068-2-78 Damp heat, cyclical to IEC 60068-2-30	
Ambient Temperature, Operating		°F (°C)	–13–158 (–25–70)	–13–158 (–25–70)
Mounting position			As required	As required
Mechanical shock resistance to IEC 60068-2-27 Shock duration 11 ms, half-sinusoidal		g	>30	>30
Terminal Capacities				
Solid		AWG	18–14	18–14
		mm^2	0.75–2.5	0.75–2.5
Stranded		AWG	20–14	20–14
		mm^2	0.5–2.5	0.5–2.5
Contacts				
Rated impulse withstand voltage	U_{imp}	Vac	6000	6000
Rated insulation voltage	U_i	V	500	500
Overvoltage category/ pollution degree			III/3	III/3
Control Circuit Reliability				
at 24 Vdc/5 mA	H_F	Fault probability	< 10-7, < 1 fault in 107 operations	—
at 5 Vdc/1 mA	H_F	Fault probability	< 5 x 10^{-6}, < 1 fault in 5 x 10^{-6} operations	—
Max. Short-Circuit Protective Device				
Fuse	gG/gL	A	10	—
Switching capacity			—	—
Rated Operational Current				
AC-15				
115 V	I_e	A	4	—
230 V	I_e	A	4	—
400 V	I_e	A	2	—
500 V	I_e	A	2	—
DC-13				
24 V	I_e	A	3	—
42 V	I_e	A	1.7	—
60 V	I_e	A	1.2	—
110 V	I_e	A	0.8	—
220 V	I_e	A	0.3	—
Lifespan, Electrical				
AC–15				
230 V/0.5 A	Operations	x 10^6	1.6	—
230 V/1.0 A	Operations	x 10^6	1	—
230 V/3.0 A	Operations	x 10^6	0.7	—
DV-13				
12 V/2.8 A	Operations	x 10^6	1.2	—

Contact Element Note: >200 Vac/60 Hz: –25/+55 °C

Palm Switches

			Momentary	Maintained	FAK-R-V-KC11-I
General					
Standards			IEC/EN 60947 VDE 0660	IEC/EN 60947 VDE 0660	IEC/EN 60947 VDE 0660
Lifespan, mechanical	Operations	x 10^6	>1	>0.1	>0.1
Operating frequency	Operations/h		≥3600	≥600	≥600
Actuating force		n	20–40	40–60	15–25
Operating torque		Nm	—	—	—
Degree of protection, IEC/EN 60529		IP	IP67, IP69K	IP67, IP69K	IP65
		UL Type	4X, 13	4X, 13	4X, 13
Climatic proofing			Damp heat, constant, to IEC 60068-2-78 Damp heat, cyclic, to IEC 60068-2-30		
Ambient Temperature, Operating		°F (°C)	–73–104 (–25–40)	–73–104 (–25–40)	–73–104 (–25–40)
Mounting position			As required		
Mechanical shock resistance to IEC 60068-2-27 Shock duration 11 ms, half-sinusoidal		g	>15	>15	>15

ASi Adapter Modules

		M22-ASI	M22-ASI-C
General			
Standards		IEC/EN 60947, DIN EN 50295	IEC/EN 60947, DIN EN 50295
Radio interference suppression		EN 55011, EN 55022	EN 55011, EN 55022
Limit value class		—	—
Protection type		IP20	IP00
Climatic proofing		Damp heat, constant, to IEC 60068-2-78, cyclical, to IEC 60068-2-30	
Ambient Temperature, Operating	°F (°C)	–13–131 (–25–55)	–13–131 (–25–55)
Shock resistance Shock duration 11 ms	g	>30	>30
Vibration to IEC 60068-2-27 (amplitude 1 mm)	Hz	—	—
Dimensions	mm	—	—
Weight	kg	—	—
Mounting		Front mounting	Front mounting
Mounting position		As required	As required
Power supply			
Rated voltage to AS-Interface Specification	Vdc	26.5–31.6	26.5–31.6
Connection technique		Yellow plug-in terminal as insulation piercing terminal	2 cables on board
Power supply		Completely from the AS-Interface cable	
Addressing		Via connection to AS-Interface cable	
Total power consumption of the AS-Interface	mA	≥40	≥40
AS-Interface		—	—
Rated operational current at full load	mA	—	—
Rated operational current when idle (no I, O set)	mA	—	—
Status LEDs		POWER AS-Interface cable: green LED on the rear side of the element ERROR AS-Interface, AS-Interface Master failure: red LED on the rear side of the element	POWER AS-Interface cable: green LED on the board ERROR AS-Interface, AS-Interface Master failure: red LED on the board

ASi-S Adapter Modules

		M22-ASI-S	M22-ASI-CS
Inputs			
Inputs, protected against short-circuit	Number	2 (normally 22 V/5 mA)	2 (normally 22 V/5 mA)
Voltage range	Vdc	—	—
Rated current per input	mA	—	—
High signal level	V	—	—
Low signal	mA	—	—
Length of connecting cables	cm	—	—
Outputs			
Outputs, protected against short-circuit	Number	1 (normally 19 V/8 mA)	1 (normally 19 V/8 mA)
Voltage range	Vdc	—	—
Max. Current Carrying Capacity			
All outputs		—	—
S 3 external outputs		—	—
Length of connecting cables	cm	—	—
Profile		S-3.A.E	S-3.A.E
Specification		2.1	2.1
Addresses	Number	62	62
Emergency-Stop Circuits			
Connection of the AS-Interface line		Yellow plug terminal with insulation piercing	2 cables on the circuit board
Power supply		Complete from AS-Interface, cable 26.5–31.6 Vdc	Complete from AS-Interface, cable 26.5–31.6 Vdc
Fixing		Front mounted	Base mounted
Addressing		Via AS-Interface cable	Via AS-Interface cable
Max. total current	A	45 mA	45 mA
Ambient Temperature, Operating	°F (°C)	–13–131 (–25–55)	–13–131 (–25–55)
Shock resistance		30 g/11 ms as per IEC 60068-2-27	30 g/11 ms as per IEC 60068-2-27
Protection type		IP20	IP00
Climatic proofing		Damp heat, constant, to IEC 60068-2-78, cyclical, to IEC 60068-2-30	Damp heat, constant, to IEC 60068-2-78, cyclical, to IEC 60068-2-30
Mounting position		As required	As required
Standards		EN 50178 EN 50 295	EN 50178 EN 50 295
Inputs		2-channel input (22 V/5 mA) (moduled by code sequence) (2 break contact sets M22-K01)	2-channel input (22 V/5 mA) (moduled by code sequence) (2 break contact sets M22-K01)
Outputs		1 output, typically 19 V/8 mA, short-circuit proof	1 output, typically 19 V/8 mA, short-circuit proof
Status Displays			
Power, AS-Interface cable		Green LED on the back	Green LED on the back
AS-Interface error, AS-Interface master failure		Red LED on the back	Red LED on the back
Profile		S-7.B.E	S-7.B.E

Dimensions

Approximate dimensions in Inches (mm).

Operators and Indicating Lights

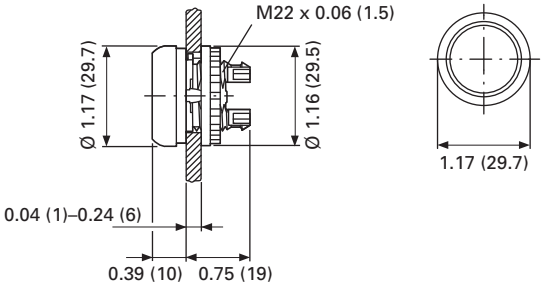

Pushbuttons

M22…-D-…

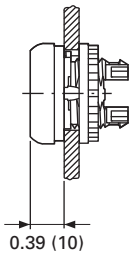

M22…-DH-…

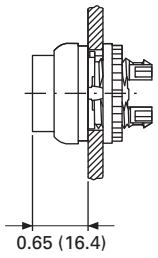

M22-DG(L)-…

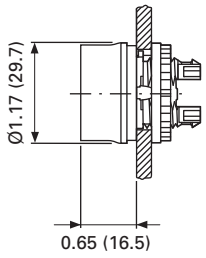

M22…-DD-…

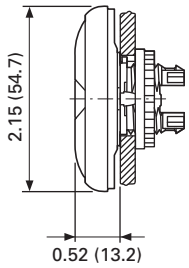

M22-D, Base Mounted

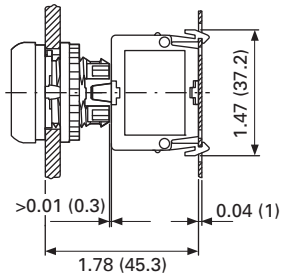

Selector Switches Operators

M22…-W-…

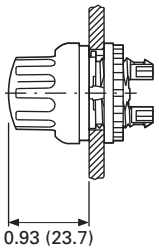

M22…-WL-…

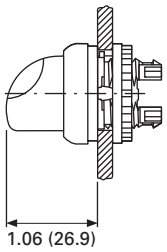

Key-Operated Selector Switches

M22…-W(R)S-…

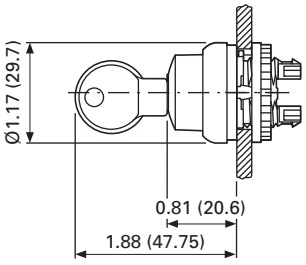

Indicating Light

M22-L…

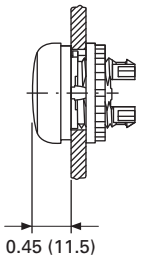

Approximate dimensions in Inches (mm).

Illuminated Pushbuttons

M22…-DL-… **M22…-DLH…**

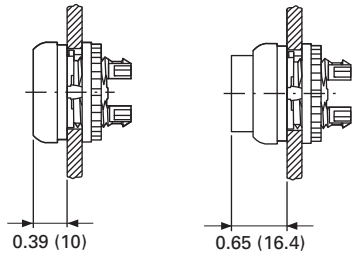

Mushroom Head Pushbutton

M22…-DP-…

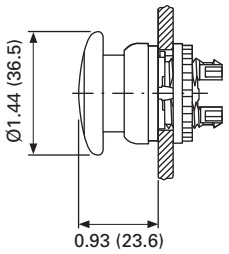

Emergency-Stop Operators

M22-PV…
M22S-PV…
M22-PVL…
M22-PVS…

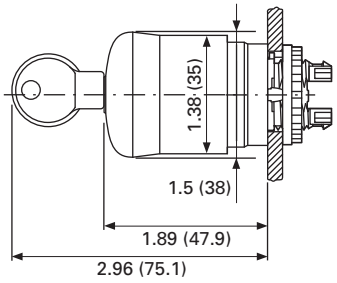

Potentiometer

M22(S)-R…

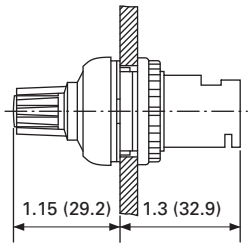

Contact Block Mounting Adapter

M22-A… **M22S-A…**

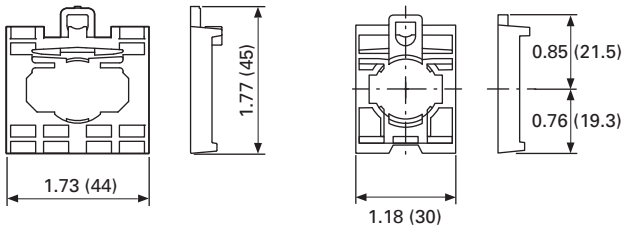

Front Mounted Centering Adapter

M22-ZA

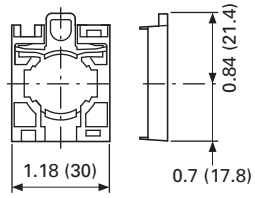

Front Mounted Indicating Light

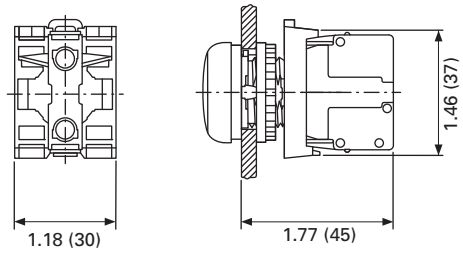

Pushbutton, Complete Devices

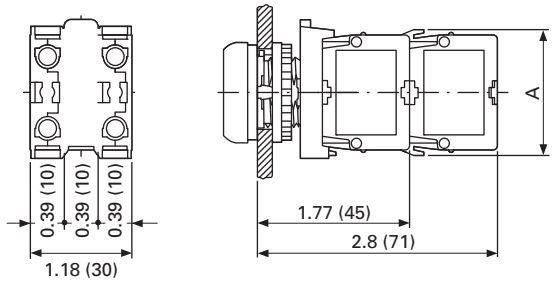

	1 x M22-K…	2 x M22-K…	1 x M22-CK…	2 x M22-CK…
A	1.46 (37.2)	1.46 (37.2)	1.54 (39.0)	1.54 (39.0)

Approximate dimensions in Inches (mm).

DIN-Rail Mounting Adapter

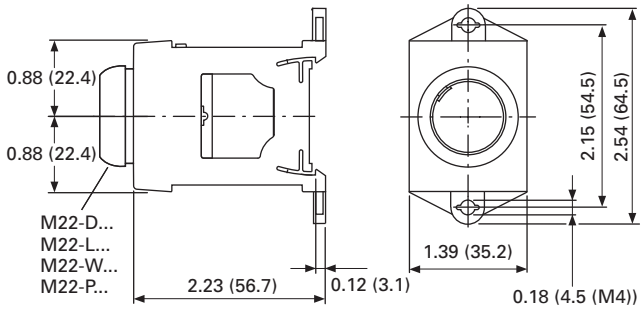

Pushbuttons and Indicating Lights with M22-TC Telescopic Clip and M22-TVC Extension

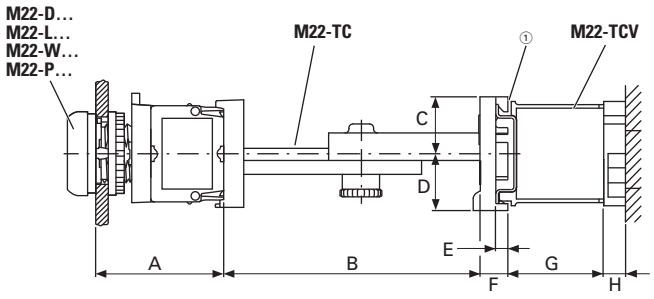

A	B	C	D	E	F	G	H
1.77 (45)	2.36–3.94 (60–100)	0.79 (20)	0.79 (20)	0.18 (4.5)	0.39 (10)	154 (39)	0.39 (10)

① Top-hat rail to IEC/EN 60715.

Palm Switches

FAK...

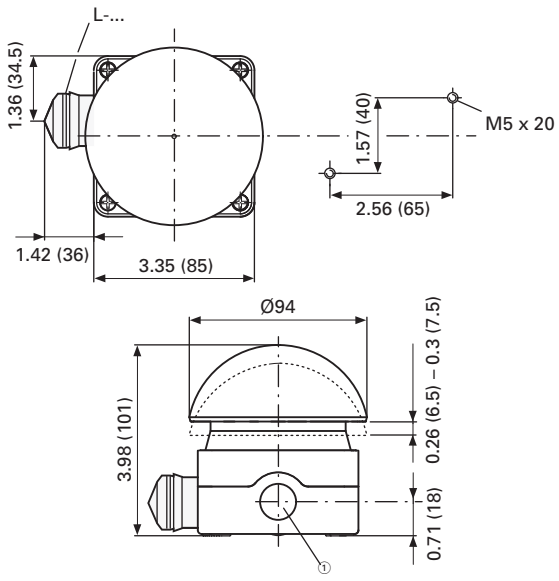

① 3 x M20 lateral, 1 x M16 in bottom.

Front Mounted Mounting Plate

M22-E...

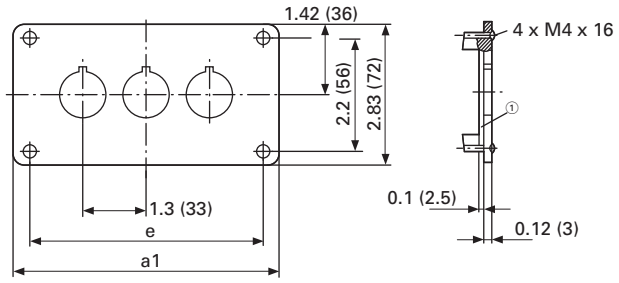

Catalog Number	a1	e
M22-E(Y) ①	2.83 (72)	2.21 (56)
M22-E2	4.13 (105)	3.50 (89)
M22-E3	5.43 (138)	4.80 (122)

Catalog Number	a1	e
M22-E4	6.73 (171)	6.10 (155)
M22-E5	8.03 (204)	7.40 (188)
M22-E6	9.33 (237)	8.70 (221)

Base Mounted Surface Mounting Enclosure

M22-I...

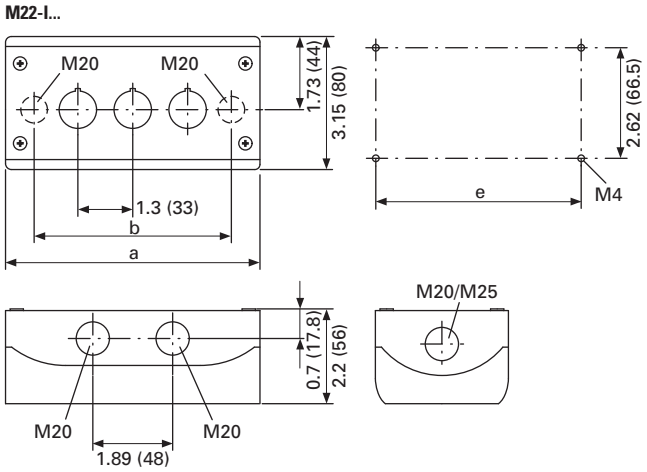

Catalog Number	Mounting Locations	a	b	e	Cable Entries		
M22-I(Y)1	1	2.83 (72.0)	1.68 (42.6)	2.30 (58.5)	2 x M16	3 x M20	2 x M25
M22-I2	2	4.72 (120.0)	3.37 (85.6)	4.19 (106.5)	2 x M20	3 x M20	2 x M25
M22-I3	3	6.02 (153.0)	4.67 (118.6)	5.49 (139.5)	2 x M20	2 x M25	4 x M20
M22-I4	4	6.10 (135.0)	5.97 (151.6)	6.79 (172.5)	2 x M20	2 x M25	4 x M20
M22-I6	6	9.92 (252.0)	8.57 (217.6)	9.39 (238.5)	2 x M20	2 x M25	4 x M20

Approximate dimensions in Inches (mm).

Covers

M22-H...

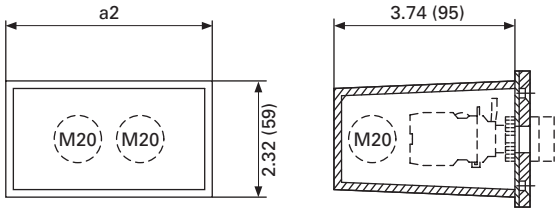

Catalog Number	a2	Cable Entry	Style
M22-H1	1.65 (42)	3 x M20	One-piece
M22-H2	2.95 (75)	4 x M20	
M22-H3	4.25 (108)	4 x M20	
M22-H4	5.55 (141)	4 x M20	Split
M22-H5	6.85 (174)	5 x M20	
M22-HE6	8.15 (207)	6 x M20	

Connecting Screw

M22-XI

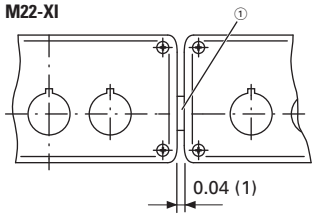

① Gasket.

Surface Mounting Enclosure for 12 Mounting Positions

M22-I12

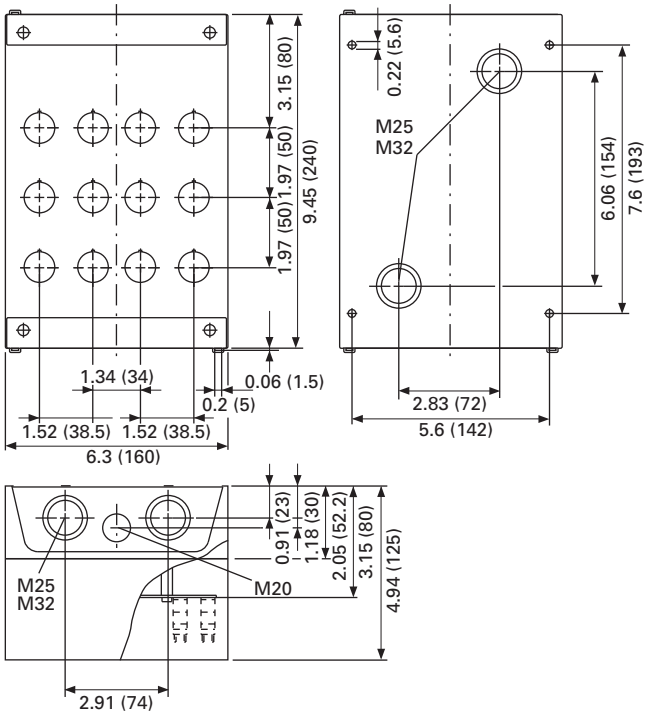

Legend Plates

M22S-ST-...

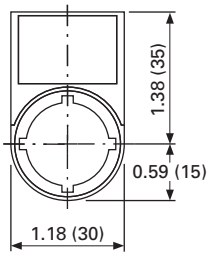

M22S-STDD-X

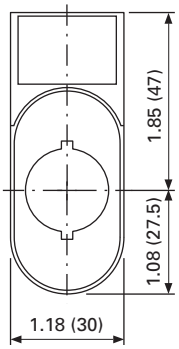

Shroud with Plaster Keys

M22-UPE

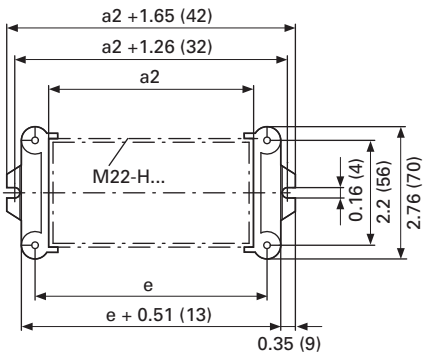

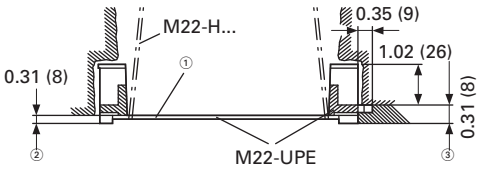

① Box for closing off when plastering.
② Plaster thickness less than 8 mm.
③ Plaster thickness more than 8 mm

Mounting Hole with Lug Slot

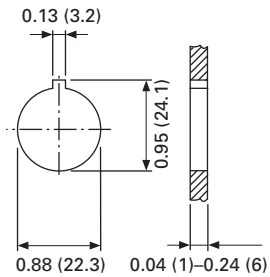

Approximate dimensions in Inches (mm).

Grid Dimension to IEC/EN 60947

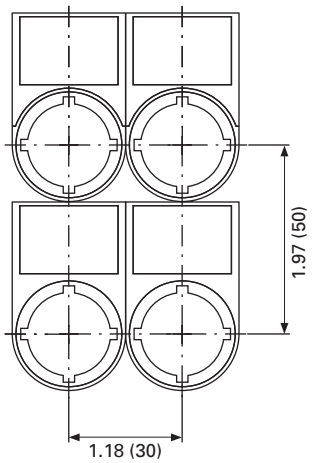

Grid Dimension for Various Combinations

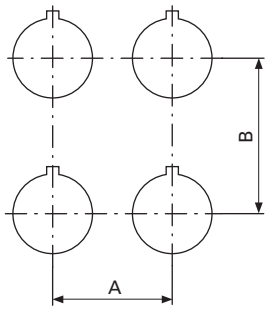

Pushbutton Diaphragm

Pushbutton diaphragm cannot be combined with label mount.

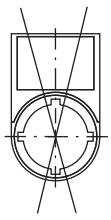

Catalog Number	A ≥	B ≥
M22(S)-…(IEC/EN 60947)	1.18 (30.0)	1.97 (50.0)
RMQ-Titan min.	1.18 (30.0)	1.58 (40.0)
M22-D… + M22-T-D	1.30 (33.0)	1.58 (40.0)
M22-D(R)P…	1.50 (38.0)	1.58 (40.0)
M22-PV…	1.50 (38.0)	1.58 (40.0)
M22-PV(L) + M22-PL-PV	1.89 (48.0)	2.20 (56.0)
M22-PV(L)(S…) + M22-D…	1.30 (33.0)	1.58 (40.0)
M22-DDL…	1.18 (30.0)	2.17 (55.0)
M22-DDL… + M22-T-DD	1.30 (33.0)	2.28 (58.0)
M22-ST…	1.18 (30.0)	1.97 (50.0)
M22-STDD…	1.18 (30.0)	2.95 (75.0)
M22-CK…	1.18 (30.0)	1.77 (45.0)
M22-CLED…	1.18 (30.0)	1.77 (45.0)
M22-XAK…	3.54 (90.0)	3.54 (90.0)
M22-XZK…	1.30 (33.0)	2.04 (52.0)
M22-XBK…	2.36 (60.0)	2.36 (60.0)
M22-XYK…	1.97 (50.0)	1.97 (50.0)
M22-D4	2.17 (55.0)	2.17 (55.0)
M22-WR…4	1.97 (50.0)	1.97 (50.0)
M22-W…J4	1.97 (50.0)	1.97 (50.0)

Grid Dimension for M22-DD…

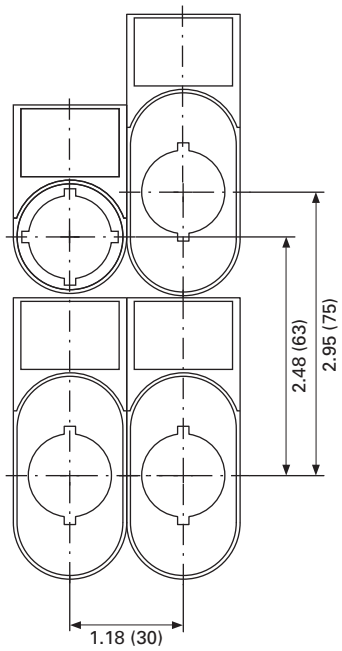

Grid Dimension for M22-DDL…

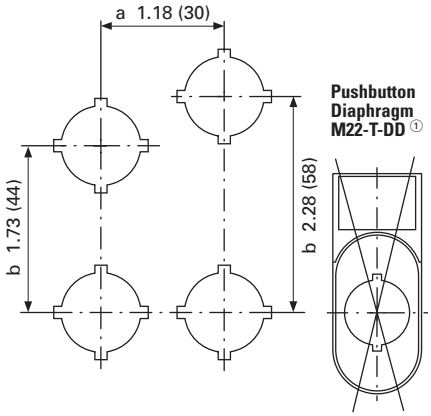

① Pushbutton diaphragm cannot be combined with label mount.

Emergency Stop Sealing Cover

M22-PL-PV

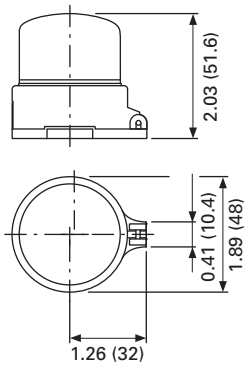

Approximate dimensions in Inches (mm).

Blanking Plugs

M22…B-…

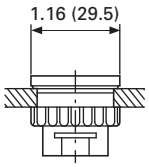

Pushbutton Diaphragm

M22-T-D

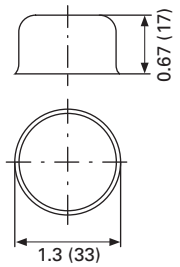

M22-T-D

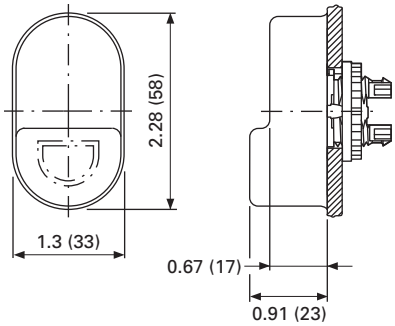

Guard Ring

M22-XGWK

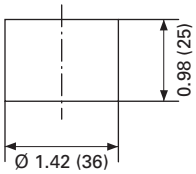

M22-XGPV

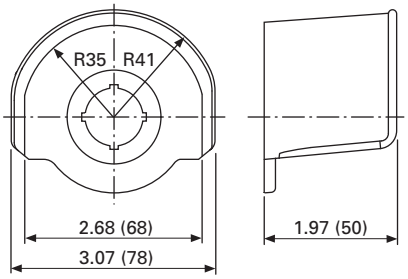

Key Cover

M22-XWS

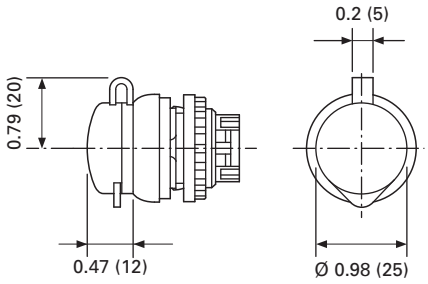

Emergency Stop Legend Plate

M22-XAK...

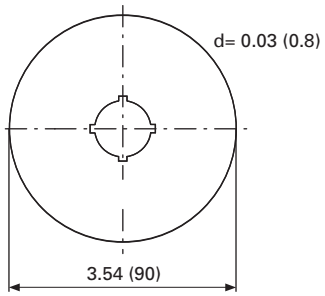

M22-X(Y)ZK...

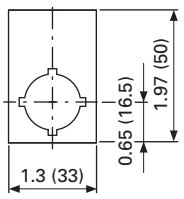

M22-XBK-...

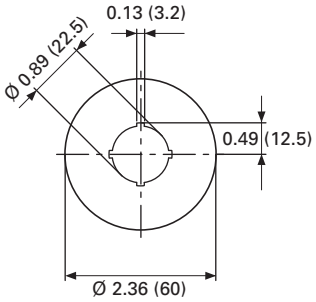

M22-XYK-...

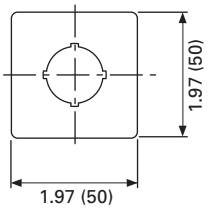

Joystick

M22…W…J…

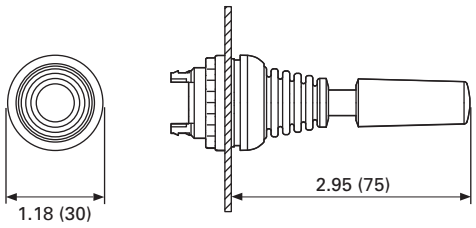

Four-Way Pushbutton

M22…-D…4-…

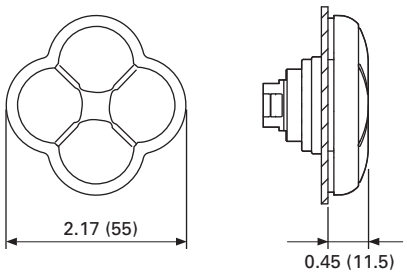

Symbols Library

Instructions for Ordering Laser Inscriptions

1. Identify part number to be inscribed.
2. Pick symbol from library and identify suffix code associated with the symbol.
3. Order part number already listed in the catalog with -ETCH suffix.
4. When placing an order by fax or Vistaline on the Web, reference order item number and indicate appropriate suffix code.

Example

To order a green flush button plate with the inscription AUTO HAND:

Order Catalog Number: M22-XD-G-ETCH (see **Page 7**).

AUTO HAND inscription is found on **Page 81** in the symbols library, suffix code is X91.

In the order notes, reference item number and suffix X91.

Letter Height Specifications: ≤ 5 characters; letter height = 0.197 in. (5 mm). > 5 characters; letter height = 0.118 in. (3 mm).

Text—English

Inscription	Catalog Number Suffix
STOP	GB0
START	GB1
CLOSE	GB2
UP	GB3
DOWN	GB4
OFF	GB5
ON	GB6
RUN	GB7
FAULT	GB8
TEST	GB9
OFF ON	GB10
MAN. AUTO	GB11
MAN. 0 AUTO	GB12
RESET	GB14
FORWARD	GB15
REVERSE	GB16
RAISE	GB17
LOWER	GB18
LEFT	GB19
RIGHT	GB20
BRAKE	GB21
HIGH	GB22
LOW	GB23
FAST	GB24
SLOW	GB25
FASTER	GB26
SLOWER	GB27
OPEN	GB32
PROG	GB62
CALL	GB63
OCCUPIED	GB64
BYPASS 0 1	GB65
BYPASS UP	GB66
EMERGENCY-STOP	GB99

Text—German

Inscription	Catalog Number Suffix
Halt	D0
Start	D1
Zu	D2
Auf	D3
Ab	D4
Aus	D5
En	D6
Betrieb	D7
Störung	D8
Prüfung	D9
Aus Ein	D10
HAND AUTO	D11
HAND 0 AUTO	D12
Antrieb	D13
Entsperren	D14
Vorwärts	D15
Rückwärts	D16
Heben	D17
Senken	D18
Links	D19
Rechts	D20
Bremsen	D21
Hoch	D22
Niedrig	D23
Schnell	D24
Langsam	D25
HAND	D28
AUTO	D29
Einrichten	D30
Tippen	D31
Öffnen	D32
Steuerspannung	D33
Start Automatik	D34
Lampentest	D35
Phasenkontrolle	D36
Alarm	D37
Alarm - Reset	D38
Sammelstörung	D39
Quittieren	D40
Quittierung	D41
Steuerung Ein	D42
Steuerung Aus	D43
Störung quittieren	D44
FÜHLER int. ext.	D72
HEIZUNG 1 2	D73
AUS-BLASEN	D74
SOLLWERT int. ext.	D75
Not-Aus	D99
Not - Aus quittieren	D100

Text Size: 3 mm—Max. 8 characters in 1st line; 10 characters in 2nd line; 8 characters in 3rd line.

Text Size: 5 mm—Max. 5 characters per line.

Letter Height Specifications: ≤ 5 characters; letter height = 0.197 in. (5 mm). > 5 characters; letter height = 0.118 in. (3 mm).

Text—French

Inscription	Catalog Number Suffix
ARRÊT	F0
MARCHE	F1
FERMÉ	F2
MONTÉE	F3
DESCENTE	F4
ARRÊT	F5
MARCHE	F6
EN SERVICE	F7
PANNE	F8
ESSAI	F9
ARRÉT MARCHE	F10
MAN. AUTO	F11
MAN. 0 AUTO	F12
REARM.	F14
AVANT	F15
ARRIÈRE	F16
MONTER	F17
DESCENDRE	F18
GAUCHE	F19
DROITE	F20
DEFAULT	F67
SOUS TENSION	F68
ARRÊT D'URGENCE	F99

Text—Swedish

Inscription	Catalog Number Suffix
STOPP	S0
START	S1
STÄNG	S2
UPP	S3
NED	S4
FRÅN	S5
TILL	S6
KÖR	S7
FEL	S8
PROV	S9
FRAN TILL	S10
MAN. AUTO	S11
MAN. 0 AUTO	S12
ATERSTÄLLNING	S14
FRAM	S15
BACK	S16
ÖKA	S17
MINSKA	S18
VÄNSTER	S19
HÖGER	S20
BROMS	S21
HÖG	S22
LÅG	S23
ÖPPNA	S32
IN	S45
UT	S46
NÖDSTOPP	S99

Symbols

Inscription	Catalog Number Suffix
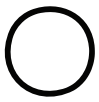	X0
	X1
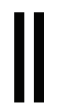	X2
	X3
	X4
	X5
R	X6
	X7
	X8
	X9
	X10
	X11
	X12

Inscription	Catalog Number Suffix
	X13
	X14
	X15
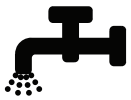	X16
	X17
X	X18
L	X19
T	X20
IV	X21
V	X22
VI	X23
Y	X24
	X25

Text Size: 3 mm—Max. 8 characters in 1st line; 10 characters in 2nd line; 8 characters in 3rd line.

Text Size: 5 mm—Max. 5 characters per line.

Inscription	Catalog Number Suffix
	X26
	X27
	X28
	X29
	X30
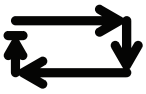	X31
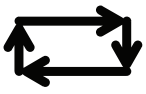	X32
	X33
	X34
	X35
	X36
	X37
	X38
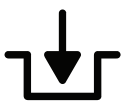	X39

Inscription	Catalog Number Suffix
	X40
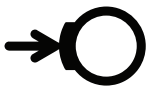	X41
	X42
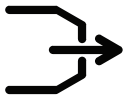	X43
	X44
	X45
	X46
	X47
	X48
	X49
	X50
0	X51
1	X52
2	X53

Inscription	Catalog Number Suffix
3	X54
4	X55
5	X56
6	X57
7	X58
8	X59
9	X60
	X61
	X62
	X63
	X64
	X65
	X66
	X67

Inscription	Catalog Number Suffix
	X68
	X69
	X70
	X71
	X72
	X73
	X74
	X75
	X76
	X77
	X78
	X79
	X80
	X81

Text Size: 3 mm—Max. 8 characters in 1st line; 10 characters in 2nd line; 8 characters in 3rd line.

Text Size: 5 mm—Max. 5 characters per line.

Inscription	Catalog Number Suffix
	X82
	X83
0 I	X88
0 I	X89
I 0	X90
AUTO HAND	X91
II I	X92
I 0 II	X93
Auto 0 Man.	X94
I II	X95
	X100
	X101
	X102
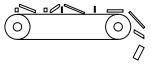	X103
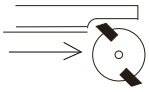	X104
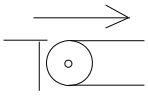	X105
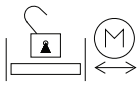	X106
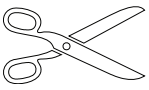	X107
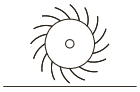	X108
	X109
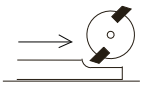	X110
	X111
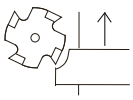	X112
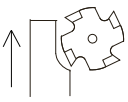	X113
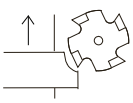	X114
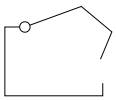	X115
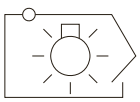	X116
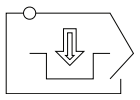	X117
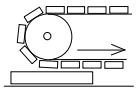	X118
	X119
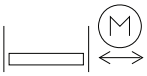	X120
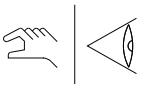	X121
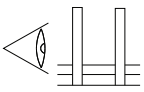	X122
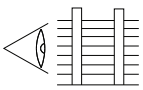	X123
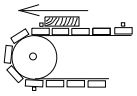	X124
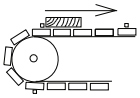	X125
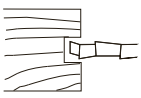	X126
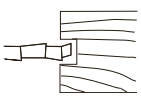	X127
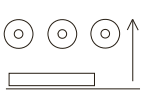	X128
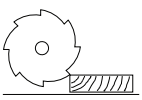	X129
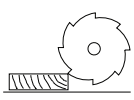	X130
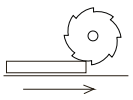	X131
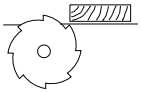	X132
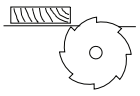	X133
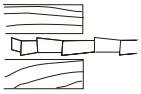	X134
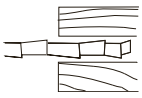	X135
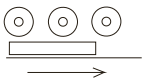	X136
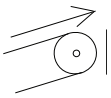	X137
	X138
	X139
	X140
	X141
	X142
	X143
	X144
	X145

Text Size: 3 mm—Max. 8 characters in 1st line; 10 characters in 2nd line; 8 characters in 3rd line.

Text Size: 5 mm—Max. 5 characters per line.

Inscription	Catalog Number Suffix
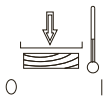	X146
	X147
	X148
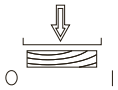	X149
	X150
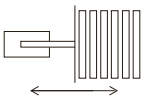	X151
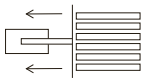	X152
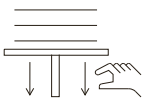	X153
	X154
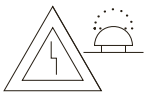	X155
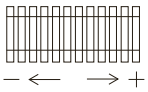	X156
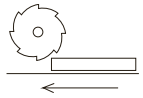	X157
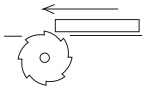	X158
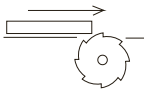	X159

Inscription	Catalog Number Suffix
	X160
	X161
	X162
	X163
	X164
	X165
	X166
	X167
	X168
	X169
	X170
	X171
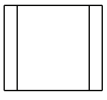	X172
	X173

Inscription	Catalog Number Suffix
	X174
	X175
	X176
	X177
	X178
	X179
	X180
	X181
	X182
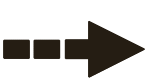	X183
	X184
	X185
	X186
	X187

Inscription	Catalog Number Suffix
	X188
	X189
	X190
	X191
	X192
	X193
	X194
	X195
	X196
	X197
	X198
	X199
	X200
	X201

Text Size: 3 mm—Max. 8 characters in 1st line; 10 characters in 2nd line; 8 characters in 3rd line.

Text Size: 5 mm—Max. 5 characters per line.

Inscription	Catalog Number Suffix
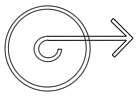	X202
	X203
L 1	X204
L 2	X205
L 3	X206
A	X207
A	X208
B	X209
B	X210
I	X211
II	X212
III	X213
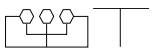	X214
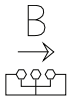	X215

Inscription	Catalog Number Suffix
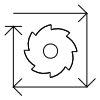	X216
	X217
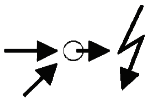	X218
	X219
	X220
	X221
1 	X222
1 / 2 	X223
	X224
 RESET	X225
	X226
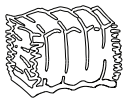	X227
	X228
	X229

Inscription	Catalog Number Suffix
	X230
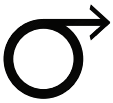	X231
	X232
	X233
	X234
	X235
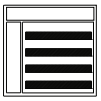	X236
	X237
0  1	X238
0  1	X239
0  1	X240
0  1	X241
	X242
0  1	X243

Inscription	Catalog Number Suffix
 Kg	X244
0 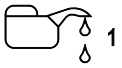 1	X245
	X246
	X247
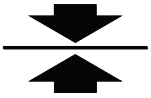	X248
 OPEN / CLOSE PROTECT.DOOR	X249
 ROTATE AXIS	X250
 SET IN	X251
CLAMP / UNCLAMP CLAMP.DEVICE	X252
	X253
	X254
	X255
	X256
	X257

Text Size: 3 mm—Max. 8 characters in 1st line; 10 characters in 2nd line; 8 characters in 3rd line.

Text Size: 5 mm—Max. 5 characters per line.

Inscription	Catalog Number Suffix
	X258
	X259
	X260
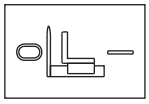	X261
	X262
	X263
	X264

Inscription	Catalog Number Suffix
	X265
	X266
	X267
	X268
	X269
	X270
CHEM I	X271

Inscription	Catalog Number Suffix
CHEM II	X272
CHEM III	X273
	X274
	X275
CONTI CUT	X276
	X277
 TOOL UNLOCKING	X278

Inscription	Catalog Number Suffix
 T1 - Tn CHANGE TOOL ARM	X279
	X280
OUT OF SERVICE	X281
	X282
	X283
	X284
	X285

Text Size: 3 mm—Max. 8 characters in 1st line; 10 characters in 2nd line; 8 characters in 3rd line.

Text Size: 5 mm—Max. 5 characters per line.

Catalog Number Index

FAK-IU 57
FAK-R 57
FAK-R-KC11-I 57
FAK-R-V-KC01-IY 57
FAK-R-V-KC02-IY 57
FAK-R-V-KC11-IY 57
FAK-R-V-KC12-IY 57
FAK-R-V-Y 57
FAK-S 57
FAK-S-KC11-I 57
FAK-Y 57
FAK-Y-KC11-I 57
M22-A 60
M22-ADC 65
M22-ADC4 65
M22-AMC 55
M22-AMC-XAM 55
M22-AMC-XAMP 55
M22-ASI 56
M22-ASI-C 56
M22-ASI-CS 56
M22-ASI-S 56
M22-A4 60
M22-B 64
M22-CKC01 60
M22-CKC10 60
M22-CK01 60
M22-CK01D 60
M22-CK02 60
M22-CK10 60
M22-CK11 60
M22-CK20 60
M22-CLEDC230-B 61
M22-CLEDC230-G 61
M22-CLEDC230-R 61
M22-CLEDC230-W 61
M22-CLEDC-B 61
M22-CLEDC-G 61
M22-CLEDC-R 61
M22-CLEDC-W 61
M22-CLED230-B 61
M22-CLED230-G 61
M22-CLED230-R 61
M22-CLED230-W 61
M22-CLED-B 61
M22-CLED-G 61
M22-CLED-R 61
M22-CLED-W 61
M22-C1-M1H 58
M22-C1-M10H 58
M22-C1-M11H 58
M22-C1-M2H 58
M22-C1-M3H 58
M22-C1-M4H 58
M22-C1-M5H 58
M22-C1-M6H 58
M22-C1-M7H 58
M22-C1-M8H 58
M22-C1-M9H 58
M22-C2-M1H 58
M22-C2-M2V 58
M22-C2-M3V 58
M22-C3-M1H 58
M22-C3-M2V 58
M22-C3-M3H 58
M22-C3-M4V 58
M22-C3-M5V 58
M22-C3-M6V 58
M22-DDLF-GR 50
M22-DDLF-GR-ETCH 50
M22-DDLF-GR-X1-X0 50
M22-DDLF-WS 50
M22-DDLF-WS-ETCH 50
M22-DDLF-WS-X1-X0 50
M22-DDLM-GR 50
M22-DDLM-GR-ETCH 50
M22-DDLM-GR-X1-X0 50
M22-DDLM-WS 50
M22-DDLM-WS-ETCH 50
M22-DDLM-WS-X1-X0 50
M22-DDL-GR 49
M22-DDL-GR-ETCH 49
M22-DDL-GR-GB1-GB0 . . . 49
M22-DDL-GR-X1-X0 49
M22-DDL-S 49
M22-DDL-S-ETCH 49
M22-DDL-S-X4-X5 49
M22-DDL-S-X7-X7 49
M22-DDL-WS 49
M22-DDL-WS-ETCH 49
M22-DDL-WS-GB1-GB0 . . . 49
M22-DDL-WS-X1-X0 49
M22-DGH-B 10
M22-DGH-G 10
M22-DGH-R 10
M22-DGH-R-GB0 10
M22-DGH-R-K01 10
M22-DGH-R-K02 10
M22-DGH-R-K10 10
M22-DGH-R-K11 10
M22-DGH-R-K20 10
M22-DGH-R-X0 10
M22-DGH-S 10
M22-DGH-W 10
M22-DGH-Y 10
M22-DGLH-B 20
M22-DGLH-G 20
M22-DGLH-R 20
M22-DGLH-W 20
M22-DGLH-Y 20
M22-DGL-B 16
M22-DGL-G 16
M22-DGL-R 16
M22-DGL-W 16
M22-DGL-X 17, 21
M22-DGL-Y 16
M22-DG-B 6
M22-DG-G 6
M22-DG-R 6
M22-DG-S 6
M22-DG-W 6
M22-DG-X 7, 11
M22-DG-X-SRG 6
M22-DG-X-SWRGYB 6
M22-DG-Y 6
M22-DH-B 10
M22-DH-G 10
M22-DH-R 10
M22-DH-R-GB0 10
M22-DH-R-K01 10
M22-DH-R-K02 10
M22-DH-R-K10 10
M22-DH-R-K11 10
M22-DH-R-K20 10
M22-DH-R-X0 10
M22-DH-S 10
M22-DH-W 10
M22-DH-X-SRG 10
M22-DH-X-SWRGYB 10
M22-DH-Y 10
M22-DI4-S 53
M22-DI4-S-ETCH 53
M22-DI4-S-X7 53
M22-DLH-B 20
M22-DLH-G 20
M22-DLH-G-K20-G 20
M22-DLH-G-K20-230G 20
M22-DLH-R 20
M22-DLH-R-K11-R 20
M22-DLH-R-K11-230R 20
M22-DLH-W 20
M22-DLH-W-K20-W 20
M22-DLH-W-K20-230W . . . 20
M22-DLH-Y 20
M22-DL-B 16
M22-DL-G 16
M22-DL-G-K10-G 15
M22-DL-G-K10-230G 15
M22-DL-G-K11-G 15
M22-DL-G-K11-230G 15
M22-DL-G-K20-G 15
M22-DL-G-K20-230G 15
M22-DL-R 16
M22-DL-R-K01-R 15
M22-DL-R-K01-230R 15
M22-DL-R-K02-R 15
M22-DL-R-K02-230R 15
M22-DL-R-K11-R 15
M22-DL-R-K11-230R 15
M22-DL-W 16
M22-DL-W-K10-W 15
M22-DL-W-K10-230W 15
M22-DL-W-K11-W 15
M22-DL-W-K11-230W 15
M22-DL-W-K20-W 15
M22-DL-W-K20-230W 15
M22-DL-X 17, 21
M22-DL-Y 16
M22-DP-G 44
M22-DP-G-X 45
M22-DP-R 44
M22-DP-R-K01 44
M22-DP-R-K02 44
M22-DP-R-K11 44
M22-DP-R-K12 44
M22-DP-R-X 45
M22-DP-S 44
M22-DP-S-X 45
M22-DP-Y 44
M22-DP-Y-X 45
M22-DRH-B 12
M22-DRH-G 12
M22-DRH-R 12
M22-DRH-S 12
M22-DRH-W 12
M22-DRH-X-SRG 12
M22-DRH-X-SWRGYB 12
M22-DRH-Y 12
M22-DRLH-B 22
M22-DRLH-G 22
M22-DRLH-R 22
M22-DRLH-W 22
M22-DRLH-Y 22
M22-DRL-B 18
M22-DRL-G 18
M22-DRL-R 18
M22-DRL-W 18
M22-DRL-W-K01-W 18
M22-DRL-W-K01-230W . . . 18
M22-DRL-W-K02-W 18
M22-DRL-W-K02-230W . . . 18
M22-DRL-W-K10-W 18
M22-DRL-W-K10-230W . . . 18
M22-DRL-W-K11-W 18
M22-DRL-W-K11-230W . . . 18
M22-DRL-W-K20-W 18
M22-DRL-W-K20-230W . . . 18
M22-DRL-X 19, 23
M22-DRL-Y 18
M22-DRP-G 46
M22-DRP-G-X 47
M22-DRP-R 46
M22-DRP-R-K01 46
M22-DRP-R-K02 46
M22-DRP-R-K11 46
M22-DRP-R-K12 46
M22-DRP-R-X 47
M22-DRP-S 46

M22-DRP-S-X 47
M22-DRP-Y 46
M22-DRP-Y-X 47
M22-DR-B 8
M22-DR-G 8
M22-DR-R 8
M22-DR-S 8
M22-DR-W 8
M22-DR-X 9, 13
M22-DR-X-SRG 8
M22-DR-X-SWRGYB 8
M22-DR-Y 8
M22-DZ-B 56
M22-DZ-B-GB14 56
M22-DZ-B-X6 56
M22-DZ-R 56
M22-DZ-R-GB0 56
M22-DZ-R-X0 56
M22-DZ-X 56
M22-D4-S 53
M22-D4-S-ETCH 53
M22-D4-S-X7 53
M22-D-B 6
M22-D-G 6
M22-D-G-GB1 6
M22-D-G-K01 5
M22-D-G-K02 5
M22-D-G-K10 5
M22-D-G-K11 5
M22-D-G-K20 5
M22-D-G-X1 6
M22-D-R 6
M22-D-R-GB0 6
M22-D-R-K01 5
M22-D-R-K02 5
M22-D-R-K10 5
M22-D-R-K11 5
M22-D-R-K20 5
M22-D-R-X0 6
M22-D-S 6
M22-D-S-K01 5
M22-D-S-K02 5
M22-D-S-K10 5
M22-D-S-K11 5
M22-D-S-K20 5
M22-D-W 6
M22-D-X 7, 11
M22-D-X-SRG 6
M22-D-X-SWRGYB 6
M22-D-Y 6
M22-ES-MS1 . . . . . 27, 43
M22-ES-MS2 . . . . . 27, 43
M22-ES-MS3 . . . . . 27, 43
M22-ES-MS4 . . . . . 27, 43
M22-ES-MS5 . . . . . 27, 43
M22-ES-MS6 . . . . . 27, 43
M22-ES-MS7 . . . . . 27, 43
M22-ES-MS8 . . . . . 27, 43
M22-EY1 64
M22-E1 64
M22-E2 64
M22-E3 64
M22-E4 64
M22-E5 64
M22-E6 64
M22-GR 65
M22-H1 64
M22-H2 64
M22-H3 64
M22-H4 64
M22-H5 64
M22-H6 64
M22-IVS 65
M22-IY1-PG 64
M22-I1-PG 64
M22-I2-PG 64
M22-I3-PG 64
M22-I4-PG 64
M22-I6-PG 64
M22-KC01 60
M22-KC01-B100 60
M22-KC01-B25 60
M22-KC10 60
M22-KC10-B100 60
M22-KC10-B25 60
M22-KT1 65
M22-K01 60
M22-K01D 60
M22-K01-B100 60
M22-K01-B25 60
M22-K10 60
M22-K10P 60
M22-K10-B100 60
M22-K10-B25 60
M22-LEDC230H-B 61
M22-LEDC230H-G 61
M22-LEDC230H-R 61
M22-LEDC230H-W 61
M22-LEDC230-B 61
M22-LEDC230-G 61
M22-LEDC230-R 61
M22-LEDC230-W 61
M22-LEDC-B 61
M22-LEDC-G 61
M22-LEDC-R 61
M22-LEDC-W 61
M22-LED230H-B 61
M22-LED230H-G 61
M22-LED230H-R 61
M22-LED230H-W 61
M22-LED230-B 61
M22-LED230-G 61
M22-LED230-R 61
M22-LED230-W 61
M22-LED-B 61
M22-LED-G 61
M22-LED-R 61
M22-LED-W 61
M22-L-B 24
M22-L-B-B 24
M22-L-B-230B 24
M22-L-G 24
M22-L-G-G 24
M22-L-G-230G 24
M22-L-R 24
M22-L-R-R 24
M22-L-R-230R 24
M22-L-W 24
M22-L-W-W 24
M22-L-W-230W 24
M22-L-X 25
M22-L-Y 24
M22-L-Y-W 24
M22-L-Y-230W 24
M22-MS 65
M22-PL-PV 64
M22-PV 27
M22-PVL 29
M22-PVLT 29
M22-PVLT-K01-R 28
M22-PVLT-K01-230R 28
M22-PVLT-K02-R 28
M22-PVLT-K02-230R 28
M22-PVLT-K12-R 28
M22-PVLT-K12-230R 28
M22-PVL-K01-R 28
M22-PVL-K01-230R 28
M22-PVL-K02-R 28
M22-PVL-K02-230R 28
M22-PVL-K12-R 28
M22-PVL-K12-230R 28
M22-PVS 27
M22-PVS-K01 26
M22-PVS-K02 26
M22-PVS-K12 26
M22-PVS-MS2 27
M22-PVS-MS3 27
M22-PVS-MS4 27
M22-PVS-MS5 27
M22-PVS-MS6 27
M22-PVS-MS7 27
M22-PVS-MS8 27
M22-PVT 27
M22-PVT-K01 26
M22-PVT-K02 26
M22-PVT-K12 26
M22-PV-K01 26
M22-PV-K02 26
M22-PV-K12 26
M22-RJ45-SA 56
M22-R1K 55
M22-R1K-RH 55
M22-R10K 55
M22-R10K-RH 55
M22-R100K 55
M22-R100K-RH 55
M22-R4K7 55
M22-R4K7-RH 55
M22-R47K 55
M22-R47K-RH 55
M22-R470K 55
M22-R470K-RH 55
M22-TA 65
M22-TC 65
M22-TCV 65
M22-T-D 65
M22-T-DD 65
M22-UPE 64
M22-USB-SA 56
M22-W 32
M22-WJ2H 54
M22-WJ2H-2P 54
M22-WJ2V 54
M22-WJ2V-2P 54
M22-WJ4 54
M22-WJ4-2P 54
M22-WK 31
M22-WKV 31
M22-WK3 31
M22-WLK3-B 36
M22-WLK3-G 36
M22-WLK3-R 36
M22-WLK3-W 36
M22-WLK3-Y 36
M22-WR 32
M22-WRJ2H 54
M22-WRJ2V 54
M22-WRJ4 54
M22-WRK 31
M22-WRK3 31
M22-WRK3-K20 30
M22-WRK3-K22 30
M22-WRK3-1 31
M22-WRK3-2 31
M22-WRK4 31
M22-WRK-K10 30
M22-WRK-K11 30
M22-WRK-K22 30
M22-WRLK3-B 36
M22-WRLK3-G 36
M22-WRLK3-R 36
M22-WRLK3-W 36
M22-WRLK3-Y 36
M22-WRLK3-1-B 36
M22-WRLK3-1-G 36
M22-WRLK3-1-R 36
M22-WRLK3-1-W 36
M22-WRLK3-1-Y 36
M22-WRLK3-2-B 36
M22-WRLK3-2-G 36
M22-WRLK3-2-R 36
M22-WRLK3-2-W 36
M22-WRLK3-2-Y 36
M22-WRS 39
M22-WRS3 40
M22-WRS3-A1 40

M22-WRS3-A2 40
M22-WRS3-A3 40
M22-WRS3-A4 41
M22-WRS3-A5 41
M22-WRS3-A6 40
M22-WRS3-A7 40
M22-WRS3-MS2 40
M22-WRS3-MS2-A1 40
M22-WRS3-MS2-A2 40
M22-WRS3-MS2-A3 40
M22-WRS3-MS2-A4 41
M22-WRS3-MS2-A5 41
M22-WRS3-MS2-A6 40
M22-WRS3-MS2-A7 40
M22-WRS3-MS3 40
M22-WRS3-MS3-A1 40
M22-WRS3-MS3-A2 40
M22-WRS3-MS3-A3 40
M22-WRS3-MS3-A4 41
M22-WRS3-MS3-A5 41
M22-WRS3-MS3-A6 40
M22-WRS3-MS3-A7 40
M22-WRS3-MS4 40
M22-WRS3-MS4-A1 40
M22-WRS3-MS4-A2 40
M22-WRS3-MS4-A3 40
M22-WRS3-MS4-A4 41
M22-WRS3-MS4-A5 41
M22-WRS3-MS4-A6 40
M22-WRS3-MS4-A7 40
M22-WRS3-MS5 40
M22-WRS3-MS5-A1 40
M22-WRS3-MS5-A2 40
M22-WRS3-MS5-A3 40
M22-WRS3-MS5-A4 41
M22-WRS3-MS5-A5 41
M22-WRS3-MS5-A6 40
M22-WRS3-MS5-A7 40
M22-WRS3-MS6 40
M22-WRS3-MS6-A1 40
M22-WRS3-MS6-A2 40
M22-WRS3-MS6-A3 40
M22-WRS3-MS6-A4 41
M22-WRS3-MS6-A5 41
M22-WRS3-MS6-A6 40
M22-WRS3-MS6-A7 40
M22-WRS3-MS7 40
M22-WRS3-MS7-A1 40
M22-WRS3-MS7-A2 40
M22-WRS3-MS7-A3 40
M22-WRS3-MS7-A4 41
M22-WRS3-MS7-A5 41
M22-WRS3-MS7-A6 40
M22-WRS3-MS7-A7 40
M22-WRS3-MS8 40
M22-WRS3-MS8-A1 40
M22-WRS3-MS8-A2 40
M22-WRS3-MS8-A3 40
M22-WRS3-MS8-A4 41
M22-WRS3-MS8-A5 41
M22-WRS3-MS8-A6 40
M22-WRS3-MS8-A7 40
M22-WRS-A1 39
M22-WRS-MS2 39
M22-WRS-MS2-A1 39
M22-WRS-MS3 39
M22-WRS-MS3-A1 39
M22-WRS-MS4 39
M22-WRS-MS4-A1 39
M22-WRS-MS5 39
M22-WRS-MS5-A1 39
M22-WRS-MS6 39
M22-WRS-MS6-A1 39
M22-WRS-MS7 39
M22-WRS-MS7-A1 39
M22-WRS-MS8 39
M22-WRS-MS8-A1 39
M22-WR3 32
M22-WR3-ETCH 32
M22-WR3-X94 32
M22-WR4 32
M22-WR-ETCH 32
M22-WR-X91 32
M22-WR-X92 32
M22-WS 38
M22-WS3 39
M22-WS3-MS2 39
M22-WS3-MS3 39
M22-WS3-MS4 39
M22-WS3-MS5 39
M22-WS3-MS6 39
M22-WS3-MS7 39
M22-WS3-MS8 39
M22-WS-MS2 38
M22-WS-MS3 38
M22-WS-MS4 38
M22-WS-MS5 38
M22-WS-MS6 38
M22-WS-MS7 38
M22-WS-MS8 38
M22-W3 32
M22-XAK 63
M22-XAK1 63
M22-XAK5 63
M22-XAK-ETCH 63
M22-XAM 55
M22-XAMP 55
M22-XBK 63
M22-XBK1 63
M22-XBK5 63
M22-XBK-ETCH 63
M22-XCK 63
M22-XCK1 63
M22-XCK2 63
M22-XCK3 63
M22-XCK-ETCH 63
M22-XDH-B 59
M22-XDH-B-ETCH 59
M22-XDH-B-GB14 59
M22-XDH-B-X6 59
M22-XDH-G 59
M22-XDH-G-ETCH 59
M22-XDH-G-GB1 59
M22-XDH-G-GB6 59
M22-XDH-G-X1 59
M22-XDH-G-X2 59
M22-XDH-R 59
M22-XDH-R-ETCH 59
M22-XDH-R-GB0 59
M22-XDH-R-GB5 59
M22-XDH-R-X0 59
M22-XDH-S 59
M22-XDH-SRG 59
M22-XDH-SWRGYB 59
M22-XDH-S-ETCH 59
M22-XDH-S-GB0 59
M22-XDH-S-GB1 59
M22-XDH-S-GB15 59
M22-XDH-S-GB16 59
M22-XDH-S-GB17 59
M22-XDH-S-GB18 59
M22-XDH-S-GB2 59
M22-XDH-S-GB3 59
M22-XDH-S-GB4 59
M22-XDH-S-GB5 59
M22-XDH-S-GB6 59
M22-XDH-S-GB9 59
M22-XDH-S-X0 59
M22-XDH-S-X1 59
M22-XDH-S-X10 59
M22-XDH-S-X11 59
M22-XDH-S-X12 59
M22-XDH-S-X13 59
M22-XDH-S-X14 59
M22-XDH-S-X15 59
M22-XDH-S-X16 59
M22-XDH-S-X17 59
M22-XDH-S-X2 59
M22-XDH-S-X4 59
M22-XDH-S-X5 59
M22-XDH-S-X7 59
M22-XDH-S-X8 59
M22-XDH-S-X9 59
M22-XDH-W 59
M22-XDH-W-ETCH 59
M22-XDH-W-GB1 59
M22-XDH-W-X1 59
M22-XDH-Y 59
M22-XDH-Y-ETCH 59
M22-XDLH-B 60
M22-XDLH-B-ETCH 60
M22-XDLH-B-GB14 60
M22-XDLH-B-X6 60
M22-XDLH-G 60
M22-XDLH-G-ETCH 60
M22-XDLH-G-GB1 60
M22-XDLH-G-GB6 60
M22-XDLH-G-X1 60
M22-XDLH-R 60
M22-XDLH-R-ETCH 60
M22-XDLH-R-GB0 60
M22-XDLH-R-GB5 60
M22-XDLH-R-X0 60
M22-XDLH-W 60
M22-XDLH-W-ETCH 60
M22-XDLH-Y 60
M22-XDLH-Y-ETCH 60
M22-XDL-B 60
M22-XDL-B-ETCH 60
M22-XDL-B-GB14 60
M22-XDL-B-X6 60
M22-XDL-G 60
M22-XDL-G-ETCH 60
M22-XDL-G-GB1 60
M22-XDL-G-GB6 60
M22-XDL-G-X1 60
M22-XDL-R 60
M22-XDL-R-ETCH 60
M22-XDL-R-GB0 60
M22-XDL-R-GB5 60
M22-XDL-R-X0 60
M22-XDL-W 60
M22-XDL-W-ETCH 60
M22-XDL-Y 60
M22-XDL-Y-ETCH 60
M22-XDP-G 59
M22-XDP-G-ETCH 59
M22-XDP-G-GB1 59
M22-XDP-G-GB6 59
M22-XDP-G-X0 59
M22-XDP-G-X1 59
M22-XDP-R 59
M22-XDP-R-ETCH 59
M22-XDP-R-GB0 59
M22-XDP-R-GB5 59
M22-XDP-R-X0 59
M22-XDP-S 59
M22-XDP-S-ETCH 59
M22-XDP-S-GB0 59
M22-XDP-S-GB1 59
M22-XDP-S-GB15 59
M22-XDP-S-GB16 59
M22-XDP-S-GB3 59
M22-XDP-S-GB4 59
M22-XDP-S-GB5 59
M22-XDP-S-GB6 59
M22-XDP-S-X0 59
M22-XDP-S-X1 59
M22-XDP-S-X4 59
M22-XDP-S-X5 59
M22-XDP-S-X7 59
M22-XDP-W 59
M22-XDP-W-ETCH 59
M22-XDP-Y 59
M22-XDP-Y-ETCH 59
M22-XD-B 56, 59

M22-XD-B-ETCH 59
M22-XD-B-GB14 . . . . . 56, 59
M22-XD-B-X6 . . . . . 56, 59
M22-XD-G 59
M22-XD-G-ETCH 59
M22-XD-G-GB1 59
M22-XD-G-GB6 59
M22-XD-G-X1 59
M22-XD-G-X2 59
M22-XD-R 56, 59
M22-XD-R-ETCH 59
M22-XD-R-GB0 . . . . . 56, 59
M22-XD-R-GB5 59
M22-XD-R-X0 . . . . . 56, 59
M22-XD-S 59
M22-XD-SRG 59
M22-XD-SWRGYB 59
M22-XD-S-ETCH 59
M22-XD-S-GB0 59
M22-XD-S-GB1 59
M22-XD-S-GB15 59
M22-XD-S-GB16 59
M22-XD-S-GB17 59
M22-XD-S-GB18 59
M22-XD-S-GB2 59
M22-XD-S-GB3 59
M22-XD-S-GB4 59
M22-XD-S-GB5 59
M22-XD-S-GB6 59
M22-XD-S-GB9 59
M22-XD-S-X0 59
M22-XD-S-X1 59
M22-XD-S-X10 59
M22-XD-S-X11 59
M22-XD-S-X12 59
M22-XD-S-X13 59
M22-XD-S-X14 59
M22-XD-S-X15 59
M22-XD-S-X16 59
M22-XD-S-X17 59
M22-XD-S-X2 59
M22-XD-S-X4 59
M22-XD-S-X5 59
M22-XD-S-X7 59
M22-XD-S-X8 59
M22-XD-S-X9 59
M22-XD-W 59
M22-XD-W-ETCH 59
M22-XD-W-GB1 59
M22-XD-W-X1 59
M22-XD-Y 59
M22-XD-Y-ETCH 59
M22-XE5 64
M22-XGPV 64
M22-XGWK 64
M22-XI 64
M22-XKDP 65
M22-XLED220 61
M22-XLED230-T 61
M22-XLED60 61
M22-XLED-T 61
M22-XST 62
M22-XST-D11 62
M22-XST-D12 62
M22-XST-ETCH 62
M22-XST-GB0 62
M22-XST-GB1 62
M22-XST-GB10 62
M22-XST-GB11 62
M22-XST-GB12 62
M22-XST-GB5 62
M22-XST-GB6 62
M22-XST-GB7 62
M22-XST-GB8 62
M22-XST-X52 62
M22-XST-X53 62
M22-XST-X88 62
M22-XST-X89 62
M22-XST-X93 62
M22-XYK 63
M22-XYK1 63
M22-XYK5 63
M22-XYK-ETCH 63
M22-XZK 63
M22-XZK-ETCH 63
M22-XZK-GB99 63
M22G-XGPV 64
M22S-B 64
M22S-DDLF-GR 50
M22S-DDLF-GR-ETCH 50
M22S-DDLF-GR-X1-X0 50
M22S-DDLF-WS 50
M22S-DDLF-WS-ETCH 50
M22S-DDLF-WS-X1-X0 50
M22S-DDLM-GR 50
M22S-DDLM-GR-ETCH . . . 50
M22S-DDLM-GR-X1-X0 . . . 50
M22S-DDLM-WS 50
M22S-DDLM-WS-ETCH . . . 50
M22S-DDLM-WS-X1-X0 . . . 50
M22S-DDL-GR 49
M22S-DDL-GR-ETCH 49
M22S-DDL-GR-GB1-GB0 . . 49
M22S-DDL-GR-X1-X0 49
M22S-DDL-S 49
M22S-DDL-S-ETCH 49
M22S-DDL-S-X4-X5 49
M22S-DDL-S-X7-X7 49
M22S-DDL-WS 49
M22S-DDL-WS-ETCH 49
M22S-DDL-WS-GB1-GB0 . . 49
M22S-DDL-WS-X1-X0 49
M22S-DH-B 10
M22S-DH-G 10
M22S-DH-R 10
M22S-DH-R-GB0 10
M22S-DH-R-K01 10
M22S-DH-R-K02 10
M22S-DH-R-K10 10
M22S-DH-R-K11 10
M22S-DH-R-K20 10
M22S-DH-R-X0 10
M22S-DH-S 10
M22S-DH-W 10
M22S-DH-X-SRG 10
M22S-DH-X-SWRGYB 10
M22S-DH-Y 10
M22S-DI4-S 53
M22S-DI4-S-ETCH 53
M22S-DI4-S-X7 53
M22S-DLH-B 20
M22S-DLH-G 20
M22S-DLH-G-K20-G 20
M22S-DLH-G-K20-230G 20
M22S-DLH-R 20
M22S-DLH-R-K11-R 20
M22S-DLH-R-K11-230R 20
M22S-DLH-W 20
M22S-DLH-W-K20-W 20
M22S-DLH-W-K20-230W . . . 20
M22S-DLH-Y 20
M22S-DL-B 16
M22S-DL-G 16
M22S-DL-G-K10-G 15
M22S-DL-G-K10-230G 15
M22S-DL-G-K11-G 15
M22S-DL-G-K11-230G 15
M22S-DL-G-K20-G 15
M22S-DL-G-K20-230G 15
M22S-DL-R 16
M22S-DL-R-K01-R 15
M22S-DL-R-K01-230R 15
M22S-DL-R-K02-R 15
M22S-DL-R-K02-230R 15
M22S-DL-R-K11-R 15
M22S-DL-R-K11-230R 15
M22S-DL-W 16
M22S-DL-W-K10-W 15
M22S-DL-W-K10-230W 15
M22S-DL-W-K11-W 15
M22S-DL-W-K11-230W 15
M22S-DL-W-K20-W 15
M22S-DL-W-K20-230W 15
M22S-DL-X 17, 21
M22S-DL-Y 16
M22S-DP-G 44
M22S-DP-G-X 45
M22S-DP-R 44
M22S-DP-R-K01 44
M22S-DP-R-K02 44
M22S-DP-R-K11 44
M22S-DP-R-K12 44
M22S-DP-R-X 45
M22S-DP-S 44
M22S-DP-S-X 45
M22S-DP-Y 44
M22S-DP-Y-X 45
M22S-DRH-B 12
M22S-DRH-G 12
M22S-DRH-R 12
M22S-DRH-S 12
M22S-DRH-W 12
M22S-DRH-X-SRG 12
M22S-DRH-X-SWRGYB 12
M22S-DRH-Y 12
M22S-DRLH-B 22
M22S-DRLH-G 22
M22S-DRLH-R 22
M22S-DRLH-W 22
M22S-DRLH-Y 22
M22S-DRL-B 18
M22S-DRL-G 18
M22S-DRL-R 18
M22S-DRL-W 18
M22S-DRL-W-K01-W 18
M22S-DRL-W-K01-230W . . 18
M22S-DRL-W-K02-W 18
M22S-DRL-W-K02-230W . . 18
M22S-DRL-W-K10-W 18
M22S-DRL-W-K10-230W . . 18
M22S-DRL-W-K11-W 18
M22S-DRL-W-K11-230W . . 18
M22S-DRL-W-K20-W 18
M22S-DRL-W-K20-230W . . 18
M22S-DRL-X 19, 23
M22S-DRL-Y 18
M22S-DRP-G 46
M22S-DRP-G-X 47
M22S-DRP-R 46
M22S-DRP-R-K01 46
M22S-DRP-R-K02 46
M22S-DRP-R-K11 46
M22S-DRP-R-K12 46
M22S-DRP-R-X 47
M22S-DRP-S 46
M22S-DRP-S-X 47
M22S-DRP-Y 46
M22S-DRP-Y-X 47
M22S-DR-B 8
M22S-DR-G 8
M22S-DR-R 8
M22S-DR-S 8
M22S-DR-W 8
M22S-DR-X 9, 13
M22S-DR-X-SRG 8
M22S-DR-X-SWRGYB 8
M22S-DR-Y 8
M22S-D4-S 53
M22S-D4-S-ETCH 53
M22S-D4-S-X7 53
M22S-D-B 6
M22S-D-G 6
M22S-D-G-GB1 6
M22S-D-G-K01 5
M22S-D-G-K02 5
M22S-D-G-K10 5

M22S-D-G-K11 5
M22S-D-G-K20 5
M22S-D-G-X1 6
M22S-D-R 6
M22S-D-R-GB0 6
M22S-D-R-K01 5
M22S-D-R-K02 5
M22S-D-R-K10 5
M22S-D-R-K11 5
M22S-D-R-K20 5
M22S-D-R-X0 6
M22S-D-S 6
M22S-D-S-K01 5
M22S-D-S-K02 5
M22S-D-S-K10 5
M22S-D-S-K11 5
M22S-D-S-K20 5
M22S-D-W 6
M22S-D-X 7, 11
M22S-D-X-SRG 6
M22S-D-X-SWRGYB 6
M22S-D-Y 6
M22S-PV 27
M22S-PVL 29
M22S-PVLT 29
M22S-PVT 27
M22S-R1K 55
M22S-R1K-RH 55
M22S-R10K 55
M22S-R10K-RH 55
M22S-R100K 55
M22S-R100K-RH 55
M22S-R30 65
M22S-R4K7 55
M22S-R4K7-RH 55
M22S-R47K 55
M22S-R47K-RH 55
M22S-R470K 55
M22S-R470K-RH 55
M22S-STDD-X 62
M22S-ST-D11 63
M22S-ST-D12 63
M22S-ST-GB0 63
M22S-ST-GB1 63
M22S-ST-GB10 63
M22S-ST-GB11 63
M22S-ST-GB12 63
M22S-ST-GB5 63
M22S-ST-GB6 63
M22S-ST-GB7 63
M22S-ST-GB8 63
M22S-ST-X 62
M22S-ST-X52 63
M22S-ST-X53 63
M22S-ST-X88 63
M22S-ST-X89 63
M22S-ST-X93 63
M22S-W 32
M22S-WJ2H 54
M22S-WJ2H-2P 54
M22S-WJ2V 54
M22S-WJ2V-2P 54
M22S-WJ4 54
M22S-WJ4-2P 54
M22S-WK 31
M22S-WKV 31
M22S-WKV-K10 30
M22S-WKV-K11 30
M22S-WKV-K22 30
M22S-WK3 31
M22S-WLK3-B 36
M22S-WLK3-G 36
M22S-WLK3-R 36
M22S-WLK3-W 36
M22S-WLK3-Y 36
M22S-WR 32
M22S-WRJ2H 54
M22S-WRJ2V 54
M22S-WRJ4 54
M22S-WRK 31
M22S-WRK3 31
M22S-WRK3-K20 30
M22S-WRK3-K22 30
M22S-WRK3-1 31
M22S-WRK3-2 31
M22S-WRK4 31
M22S-WRK-K10 30
M22S-WRK-K11 30
M22S-WRK-K22 30
M22S-WRLK3-B 36
M22S-WRLK3-G 36
M22S-WRLK3-R 36
M22S-WRLK3-W 36
M22S-WRLK3-Y 36
M22S-WRLK3-1-B 36
M22S-WRLK3-1-G 36
M22S-WRLK3-1-R 36
M22S-WRLK3-1-W 36
M22S-WRLK3-1-Y 36
M22S-WRLK3-2-B 36
M22S-WRLK3-2-G 36
M22S-WRLK3-2-R 36
M22S-WRLK3-2-W 36
M22S-WRLK3-2-Y 36
M22S-WRS 39
M22S-WRS3 41
M22S-WRS3-A1 41
M22S-WRS3-A2 41
M22S-WRS3-A3 41
M22S-WRS3-A4 42
M22S-WRS3-A5 42
M22S-WRS3-A6 42
M22S-WRS3-A7 42
M22S-WRS3-MS2 41
M22S-WRS3-MS2-A1 41
M22S-WRS3-MS2-A2 41
M22S-WRS3-MS2-A3 41
M22S-WRS3-MS2-A4 42
M22S-WRS3-MS2-A5 42
M22S-WRS3-MS2-A6 42
M22S-WRS3-MS2-A7 42
M22S-WRS3-MS3 41
M22S-WRS3-MS3-A1 41
M22S-WRS3-MS3-A2 41
M22S-WRS3-MS3-A3 41
M22S-WRS3-MS3-A4 42
M22S-WRS3-MS3-A5 42
M22S-WRS3-MS3-A6 42
M22S-WRS3-MS3-A7 42
M22S-WRS3-MS4 41
M22S-WRS3-MS4-A1 41
M22S-WRS3-MS4-A2 41
M22S-WRS3-MS4-A3 41
M22S-WRS3-MS4-A4 42
M22S-WRS3-MS4-A5 42
M22S-WRS3-MS4-A6 42
M22S-WRS3-MS4-A7 42
M22S-WRS3-MS5 41
M22S-WRS3-MS5-A1 41
M22S-WRS3-MS5-A2 41
M22S-WRS3-MS5-A3 41
M22S-WRS3-MS5-A4 42
M22S-WRS3-MS5-A5 42
M22S-WRS3-MS5-A6 42
M22S-WRS3-MS5-A7 42
M22S-WRS3-MS6 41
M22S-WRS3-MS6-A1 41
M22S-WRS3-MS6-A2 41
M22S-WRS3-MS6-A3 41
M22S-WRS3-MS6-A4 42
M22S-WRS3-MS6-A5 42
M22S-WRS3-MS6-A6 42
M22S-WRS3-MS6-A7 42
M22S-WRS3-MS7 41
M22S-WRS3-MS7-A1 41
M22S-WRS3-MS7-A2 41
M22S-WRS3-MS7-A3 41
M22S-WRS3-MS7-A4 42
M22S-WRS3-MS7-A5 42
M22S-WRS3-MS7-A6 42
M22S-WRS3-MS7-A7 42
M22S-WRS3-MS8 41
M22S-WRS3-MS8-A1 41
M22S-WRS3-MS8-A2 41
M22S-WRS3-MS8-A3 41
M22S-WRS3-MS8-A4 42
M22S-WRS3-MS8-A5 42
M22S-WRS3-MS8-A6 42
M22S-WRS3-MS8-A7 42
M22S-WRS-A1 39
M22S-WRS-MS2 39
M22S-WRS-MS2-A1 39
M22S-WRS-MS3 39
M22S-WRS-MS3-A1 39
M22S-WRS-MS4 39
M22S-WRS-MS4-A1 39
M22S-WRS-MS5 39
M22S-WRS-MS5-A1 39
M22S-WRS-MS6 39
M22S-WRS-MS6-A1 39
M22S-WRS-MS7 39
M22S-WRS-MS7-A1 39
M22S-WRS-MS8 39
M22S-WRS-MS8-A1 39
M22S-WR3 32
M22S-WR3-ETCH 32
M22S-WR3-X94 32
M22S-WR4 32
M22S-WR-ETCH 32
M22S-WR-X91 32
M22S-WR-X92 32
M22S-WS 38
M22S-WS3 39
M22S-WS3-MS2 39
M22S-WS3-MS3 39
M22S-WS3-MS4 39
M22S-WS3-MS5 39
M22S-WS3-MS6 39
M22S-WS3-MS7 39
M22S-WS3-MS8 39
M22S-WS-MS2 38
M22S-WS-MS3 38
M22S-WS-MS4 38
M22S-WS-MS5 38
M22S-WS-MS6 38
M22S-WS-MS7 38
M22S-WS-MS8 38
M22S-W3 32
V-M20 64