finder®
SWITCH TO THE FUTURE

Step relays 10 A



Lighting control in corridors (for hotels, offices and hospitals)

Bedroom light control

Living room light control

26
SERIES

FINDER reserves the right to alter characteristics at any time without notice. FINDER assumes no liability for damage to persons or property, caused as a result of the incorrect use or application of its products.

1 or 2 Pole electromechanical step relay with electrically separate coil and contact circuits

- Choice of 6 switching sequences
- Screw terminal connections
- AC coil
- Panel mount
- Cadmium free contact material

26.01/02/04/06/08/03
Screw terminal



	26.01	26.02, 04, 06, 08	26.03
			
	• Single phase switch 1 NO (SPST-NO)	• Double phase switch 2 NO (DPST-NO)	• 1 NO + 1 NC (SPST-NO + SPST-NC)
	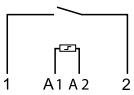 26.01	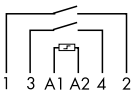 26.02 26.04 26.06 26.08	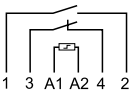 26.03
For outline drawing see page 6			
Contact specification			
Number of contacts	1 NO (SPST-NO)	2 NO (DPST-NO)	1NO+1NC (SPST-NO+SPST-NC)
Rated current/Maximum peak current A	10/20	10/20	10/20
Rated voltage/ Maximum switching voltage V AC	250/400	250/400	250/400
Rated load AC1 VA	2500	2500	2500
Rated load AC15 (230 V AC) VA	500	500	500
Nominal lamp rating:			
230 V incandescent/halogen W	800	800	800
fluorescent tubes with electronic ballast W	400	400	400
fluorescent tubes with electromagnetic ballast W	360	360	360
CFL W	200	200	200
230 V LED W	200	200	200
LV halogen or LED with electronic ballast W	200	200	200
LV halogen or LED with electromagnetic ballast W	400	400	400
Minimum switching load mW (V/mA)	1000 (10/10)	1000 (10/10)	1000 (10/10)
Standard contact material	AgNi	AgNi	AgNi
Coil specification			
Nominal voltage (UN) V AC (50 Hz)	12 - 24 - 48 - 110 - 230	12 - 24 - 48 - 110 - 230	12 - 24 - 48 - 110 - 230
V DC	—	—	—
Rated power AC/DC VA (50 Hz)/W	4.5/—	4.5/—	4.5/—
Operating range AC (50 Hz)	(0.8…1.1)U_N	(0.8…1.1)U_N	(0.8…1.1)U_N
DC	—	—	—
Technical data			
Mechanical life AC/DC cycles	$300 \cdot 10^3$	$300 \cdot 10^3$	$300 \cdot 10^3$
Electrical life at rated load in AC1 cycles	$100 \cdot 10^3$	$100 \cdot 10^3$	$100 \cdot 10^3$
Minimum/Maximum impulse duration	0.1 s/1 h (according to EN 60669)	0.1 s/1 h (according to EN 60669)	0.1 s/1 h (according to EN 60669)
Insulation between coil and contacts (1.2/50 µs) kV	4	4	4
Ambient temperature range °C	–40…+40	–40…+40	–40…+40
Protection category	IP 20	IP 20	IP 20
Approvals (according to type)	CE EAC		

K

Ordering information

Example: 26 series screw terminal, panel mount relay, double phase switch 2 NO (DPST-NO) 10 A contacts, coil rated 12 V AC.

2 6	.	0	2	.	8	.	0 1 2	.	0	.	0	.	0

Series

Type
0 = Screw terminal

No. of poles
1 = Single phase switch 1 NO (SPST-NO)
2 = Double phase switch 2 NO (DPST-NO)
3 = Double phase switch 1 NO + 1 NC (SPST-NO + SPST-NC)
4 = 4 sequences double phase switch 2 NO (DPST-NO)
6 = 3 sequences double phase switch 2 NO (DPST-NO)
8 = 4 sequences double phase switch 2 NO (DPST-NO)

Coil version
8 = AC (50 Hz)

Coil voltage
See coil specifications

Technical data

Insulation					
Dielectric strength					
between supply and contacts	V AC	3500			
between open contacts	V AC	2000			
between adjacent contacts	V AC	2000			
Other data		**26.01, 26.03, 26.08**		**26.02, 26.04, 26.06**	
Power lost to the environment					
with rated current and coil de-energised	W	0.9		1.8	
Screw torque	Nm	0.8		0.8	
Max. wire size		solid cable	stranded cable	solid cable	stranded cable
	mm^2	1 x 4 / 2 x 2.5	1 x 2.5 / 2 x 2.5	1 x 4 / 2 x 2.5	1 x 2.5 / 2 x 2.5
	AWG	1 x 12 / 2 x 14	1 x 14 / 2 x 14	1 x 12 / 2 x 14	1 x 14 / 2 x 14

Coil specifications

AC version data

Nominal voltage U_N	Coil code	Operating range U_{min}	Operating range U_{max}	Resistance R	Consumption I at U_N (50 Hz)
V		V	V	Ω	mA
12	**8**.012	9.6	13.2	17	370
24	**8**.024	19.2	26.4	70	180
48	**8**.048	38.4	52.8	290	90
110	**8**.110	88	121	1500	40
230	**8**.230	184	253	6250	20

Type	Number of steps	Sequence 1	2	3	4
26.01	2				
26.02	2				
26.03	2				
26.04	4				
26.06	3				
26.08	4				

K

Wiring diagrams

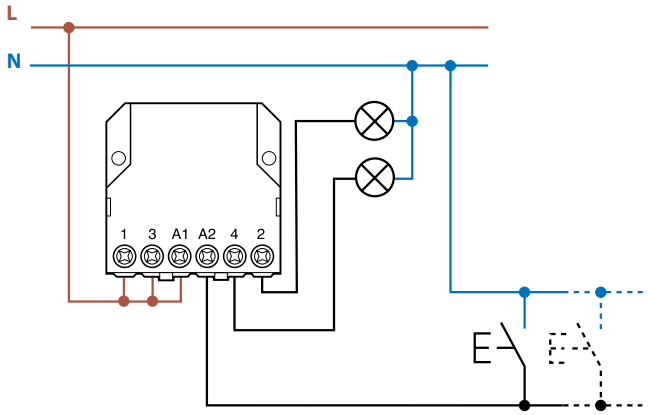

Accessories

for 12 and 24 V DC control applications

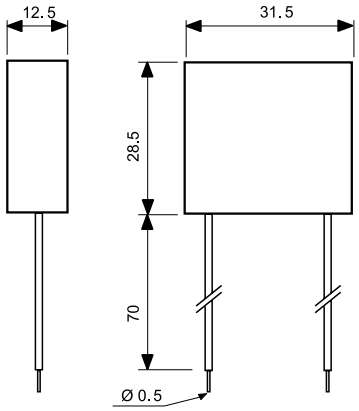

Type: 026.9.012
Nominal voltage: 12 V DC
Max temperature: +40 °C
Operating range: (0.9…1.1)U_N
Type: 026.9.024
Nominal voltage: 24 V DC
Max temperature: +40 °C
Operating range: (0.9…1.1)U_N

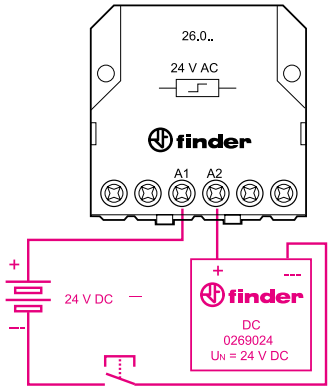

Example of wiring for 24 V DC control application.

Module for use with illuminated push buttons (230 V AC applications)

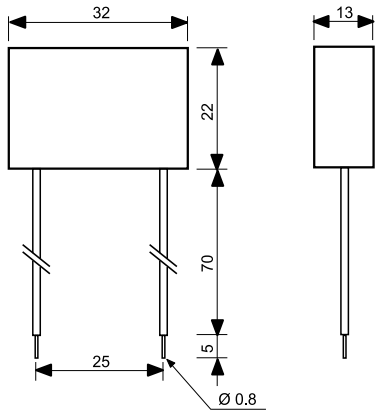

Type 026.00
Sealed construction, 7.5 cm insulated flexible wire termination.

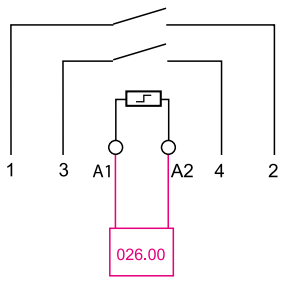

Example of wiring diagram of type 026.00
This module is necessary when using between 1 and a maximum of 15 illuminated push buttons in the coil circuit (Each 1 mA max, 230 V AC). It must be connected in parallel to the coil of the relay (see diagram).

K

Outline drawings

Type 26.01
Screw terminal



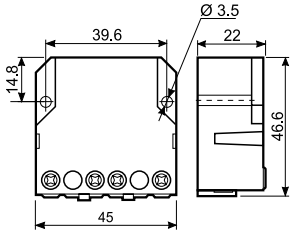

Types 26.02 / 04 / 06 / 08
Screw terminal



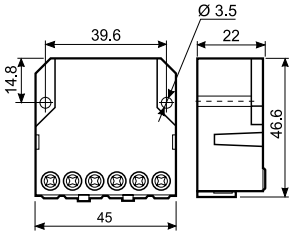

Type 26.03
Screw terminal



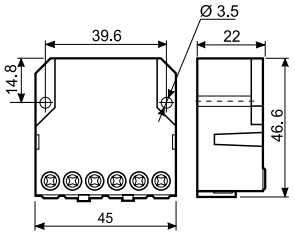

K

Please see general technical information

X-2017, www.findernet.com