Brand of NTN corporation

Technical data

UCFE213-40

Bearing units



Grey cast housing, radial insert ball bearing with socket set screws,seal with slinger

KIT CONTENT

UC213-40G2, FE213

VISUAL (S)

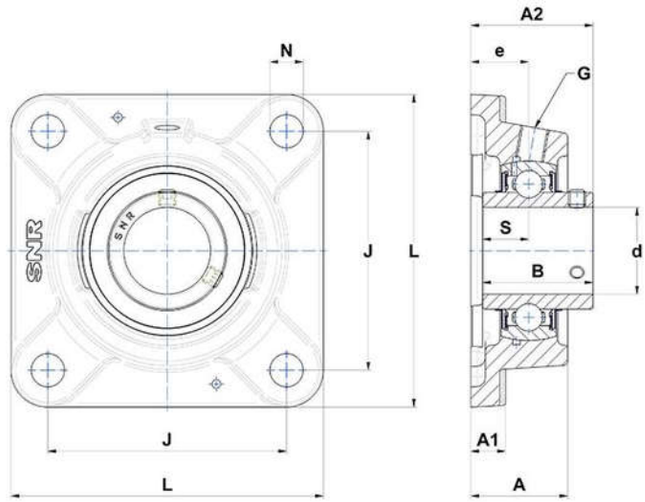

PRODUCT DEFINITION

Brand	SNR
A - Housing height	56 mm
A1 - Housing foot height / flange height	18 mm
A2 - Total height from mounting surface	77,7 mm
B - Width of Inner Ring	65,1 mm
d - Shaft diameter	63,5 mm

PRODUCT DEFINITION	
e - Distance mounting surface to bearing center	38 mm
G - Grease fitting	R1/8"
J - Mounting holes distance	150 mm
L - Housing width / diameter	188 mm
N - Mounting hole dimension	18 mm
S - Distance front side/bearing centre	25,4 mm

PRODUCT PERFORMANCE	
C - Dynamic load rating	57200000 mN
C0 - Static load rating	40000000 mN
Operating temperature min.	253,15 °K
Operating temperature max.	373,15 °K

OTHER FEATURES	
Mass	6,42 kg
Recommended tightening torque for set screw	16.8 N-m