SKF Couplings



® SKF is a registered trademark of the SKF Group.
Hytrel and Viton are registered trademarks of DuPont.

© SKF Group 2018
The contents of this publication are the copyright of the publisher and may not be reproduced (even extracts) unless prior written permission is granted. Every care has been taken to ensure the accuracy of the information contained in this publication but no liability can be accepted for any loss or damage whether direct, indirect or consequential arising out of the use of the information contained herein.

PUB PT/P1 15822/2 EN · Janurary 2018

This publication supersedes publications 6897 EN, 6897/1 EN and 6897/2 EN.

SKF

Contents

SKF – the knowledge engineering company **4**

SKF Couplings **6**
Coupling selection guide 7
Selection parameters for SKF shaft couplings 8

SKF Grid Couplings **10**
Selection 10
Engineering data 13
Order data 13
Installation 16
Product tables
Horizontal split cover 18
Vertical split cover 19
Grid couplings with taper bushing option 20
Full spacer 21
Half spacer 22

SKF Gear Couplings **23**
Selection 24
Engineering data 26
Order data 26
Installation 31
Product tables
Double entgagement 32
Single engagement 33
Double engagement, heat treated and alloy steel series 34
Double engagement – Spacer 35
Double engagement – Vertical 36
Double engagement – Slide 37
Single engagement – Slide 38
Rigid flanged sleeve 39
Gear couplings with taper bushing option 40
Floating shaft gear couplings 41
Product tables
Single engagement – Vertical and floating shaft 43
Single engagement – Floating shaft 44

SKF Disc Couplings **45**
Selection 45
Engineering data 46
Order data 46
Installation 49
Product tables
W4 – 4 Bolt single 51
W4 – 4 Bolt double 52
W6 – 6 Bolt double 53
W8 – 8 Bolt double 54
Floating shaft disc couplings 55
Product tables
W4 FH – Floating shaft 57
W6 FH – Floating shaft 58
W8 FH – Floating shaft 59

SKF Flex Couplings **60**
Selection 60
Engineering data 62
Order data 62
Installation 63
Product tables
SKF Flex flanges types B, F and H . . 65
SKF Flex Spacer Coupling 66
Installation 66
Product tables
SKF Flex Spacer Coupling 68

SKF Chain Couplings **69**
Selection 69
Engineering data 70
Order data 71
Installation 71
Product tables
Bored-to-size and taper bushing types FTB and HTB 72

SKF FRC Couplings **73**
Selection 73
Engineering data 74
Order data 74
Installation 75
Product tables
SKF FRC Couplings 76

SKF Jaw Couplings **77**
Selection 77
Engineering data 77
Order data 77
Installation 79
Product tables
SKF Jaw Couplings 80

SKF Universal Joints **81**
Selection 81
Engineering data 81
Order data 81
Product tables
Single universal joints 82
Double universal joints 82

General engineering data on SKF couplings **83**
Keyseat dimensions – metric, British standard (inch) and ANSI 83

Lubrication **98**

Related products **100**
Shaft alignment tools 100
SKF Stroboscopes TKRS series 105

SKF – the knowledge engineering company





From one simple but inspired solution to a misalignment problem in a textile mill in Sweden, and fifteen employees in 1907, SKF has grown to become a global industrial knowledge leader.

Over the years, we have built on our expertise in bearings, extending it to seals, mechatronics, services and lubrication systems. Our knowledge network includes 46 000 employees, 15 000 distributor partners, offices in more than 130 countries, and a growing number of SKF Solution Factory sites around the world.

Research and development

We have hands-on experience in over forty industries based on our employees' knowledge of real life conditions. In addition, our world-leading experts and university partners pioneer advanced theoretical research and development in areas including tribology, condition monitoring, asset management and bearing life theory. Our ongoing commitment to research and development helps us keep our customers at the forefront of their industries.

Meeting the toughest challenges

Our network of knowledge and experience, along with our understanding of how our core technologies can be combined, helps us create innovative solutions that meet the toughest of challenges. We work closely with our customers throughout the asset life cycle, helping them to profitably and responsibly grow their businesses.

Working for a sustainable future

Since 2005, SKF has worked to reduce the negative environmental impact from our operations and those of our suppliers. Our continuing technology development resulted in the introduction of the SKF BeyondZero portfolio of products and services which improve efficiency and reduce energy losses, as well as enable new technologies harnessing wind, solar and ocean power. This combined approach helps reduce the environmental impact both in our operations and our customers' operations.

SKF Solution Factory makes SKF knowledge and manufacturing expertise available locally to provide unique solutions and services to our customers.



Working with SKF IT and logistics systems and application experts, SKF Authorized Distributors deliver a valuable mix of product and application knowledge to customers worldwide.



Our knowledge – your success

SKF Life Cycle Management is how we combine our technology platforms and advanced services, and apply them at each stage of the asset life cycle, to help our customers to be more successful, sustainable and profitable.

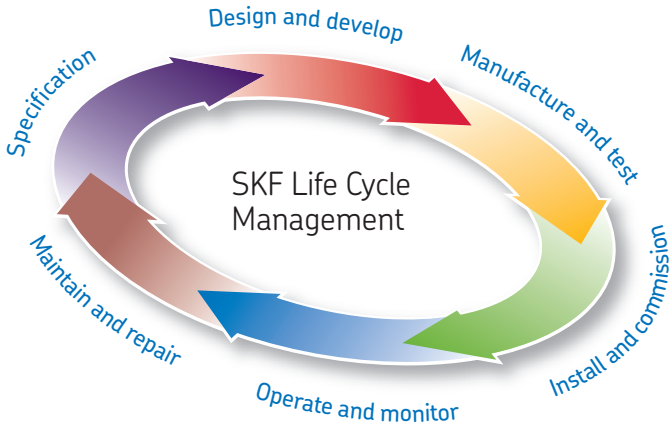

Working closely with you

Our objective is to help our customers improve productivity, minimize maintenance, achieve higher energy and resource efficiency, and optimize designs for long service life and reliability.

Innovative solutions

Whether the application is linear or rotary or a combination, SKF engineers can work with you at each stage of the asset life cycle to improve machine performance by looking at the entire application. This approach doesn't just focus on individual components like bearings or seals. It looks at the whole application to see how each component interacts with each other.

Design optimization and verification

SKF can work with you to optimize current or new designs with proprietary 3-D modelling software that can also be used as a virtual test rig to confirm the integrity of the design.



Bearings
SKF is the world leader in the design, development and manufacture of high performance rolling bearings, plain bearings, bearing units and housings.



Machinery maintenance
Condition monitoring technologies and maintenance services from SKF can help minimize unplanned downtime, improve operational efficiency and reduce maintenance costs.



Sealing solutions
SKF offers standard seals and custom engineered sealing solutions to increase uptime, improve machine reliability, reduce friction and power losses, and extend lubricant life.



Mechatronics
SKF fly-by-wire systems for aircraft and drive-by-wire systems for off-road, agricultural and forklift applications replace heavy, grease or oil consuming mechanical and hydraulic systems.



Lubrication solutions
From specialized lubricants to state-of-the-art lubrication systems and lubrication management services, lubrication solutions from SKF can help to reduce lubrication related downtime and lubricant consumption.



Actuation and motion control
With a wide assortment of products – from actuators and ball screws to profile rail guides – SKF can work with you to solve your most pressing linear system challenges.

SKF Couplings

Flexible couplings are devices used to mechanically connect two shafts to transmit power from one shaft to the other. They are also able to compensate for shaft misalignment in a torsionally rigid way. Misalignment can be angular, parallel or skew. This is particularly important for applications where misalignment could affect the velocity and acceleration of the driven shaft. The performance of the coupling depends largely upon how it is installed, aligned and maintained.

In response to industry's ultimate need to produce more with less, SKF has combined its knowledge and experience with the latest technology to develop solutions for a variety of applications and operating conditions. Whether the goal is to design equipment that provides more customer value, or to improve overall profitability, SKF's experience and expertise can help you meet your goals.

SKF offers a wide range of standard and customised coupling products. SKF Couplings cover a wide range of coupling types, sizes and capacity ratings for many applications and factory environments.

For large, heavy duty applications, SKF has large size couplings. These couplings, which provide optimum contact with the shaft, can accommodate high torque values, while reducing power loss and minimizing the effects of misalignment.



Coupling selection guide

Introduction

There is an extensive range of couplings available on the market today. Unsurprisingly, selecting the best coupling for a particular application can be a complicated matter.

A coupling can be simply defined as "a device that transmits power (torque) from one shaft to another, while allowing some degree of misalignment (angular, parallel or combined) between the two rotating shafts". In addition to the above definition, some couplings allow for axial (end-float) movement .

Also, couplings may be classified as either flexible or rigid.

Depending on its type, a coupling may be required to tolerate a variety of conditions during its service life.

Some of these functions could be to:

- Transmit power (torque)
- Permit and accommodate limited amounts of misalignment (angular and/or parallel)
- Allow for ease of assembly, maintenance and dis-assembly
- Allow for some amount of dampening (if required)
- Allow or compensate for end-float/axial movement/thermal expansion
- Retain rigidity between the connecting hubs and the shafts
- Withstand/compensate for temperature fluctuations/thermal growth
- Provide protection against overload of the driven machine
- Be of low inertia with minimal effects on the drive system
- Where necessary, provide good lubricant retention

For permanent couplings (couplings that are in-situ all the time, as opposed to clutches or non-permanent couplings), there are two main groups based on the transfer element, with typical features listed as follows:

Elastomeric couplings (transfer element typically a rubber or urethane compound or a derivative).

- Torsionally soft
- No lubrication required
- Generally less expensive (for similar torque capabilities) than metallic couplings
- Usually have field replaceable elements or elastomers
- Wide range of series available with some universal interchange

Metallic couplings (transfer element typically steel).

- Torsionally stiffer as compared to elastomeric couplings
- Offers best torque-to-diameter ratio with a higher power density
- Most competitive offer (for torque capacity)
- Excellent temperature range (usually limited by the oil seal material)
- Good chemical resistance
- Available in numerous materials (in some styles)
- Available with zero backlash

Considering the wide range of different coupling types and styles, many suitable solutions are possible.

Quick selection guide

In order to quickly assess which coupling offers the best solution based on application parameters, please refer to the basic pre-selection table on **page 8**.

These tables incorporate many factors that could determine (or eliminate) a coupling style by either operational or environmental considerations.

The service factors shown in this catalogue are based on the prime mover being an electric motor or turbine. Accordingly, the service factor must be increased for applications with IC engine prime movers.

Special note on engine (IC) drives

Where the prime mover is an internal combustion (IC) engine, special consideration needs to be given to the number of cylinders, balance (flywheel), in conjunction with the driven machines' characteristics, especially in relation to the system's torsional vibration.

The type of coupling selected needs to be able to withstand, and compensate for, conditions not normally associated with electric motor or turbine prime mover systems.

Selection parameters for SKF shaft couplings

The following table shows typical characteristics for various coupling types. To be used in determining which coupling type or style may be best suited for an application.

General notes:

The preceding table is a general comparison of the SKF range of couplings.

The values, where shown, are based on the best or highest value and may not represent the entire size range. Check the catalogue for details, especially if using different elastomer materials, as these can change not only temperature range and chemical resistance, but may also affect the torque capacity, and allowable misalignment, as often elastomers of varying durometer (Shore A°) are used (→ note **4**).

Selection parameters for shaft couplings

SKF designation/name selection criteria	General type/family	Coupling type (→ note **1**)	Shaft capacity range (→ note **2**)	Maximum torque capacity (→ note **3**)	Power capacity (per 100 r/min)	Maximum r/min (for smallest coupling)	Maximum parallel misalignment (β)	Maximum angular misalignment (α°)
–	–	–	mm	Nm	kW	r/min	mm	°
Flex	Tyre	E	9–190	14 675	525	4 500	1,1–6,6	<= 4°
Gear	Gear	M	13–425	555 000	5,810	8 000	1,2–12,7	<= 1,5°
Grid	Taper grid	M	12–420	336 000	3,523	4 500	0,3–0,76	<= 1,4°
Disc	Laminate disc	M	10–190	40 000	4,200	24 000	(→ note **10**)	<= 0,67°
Chain	Chain	M	10–155	17 100	136	5 000	0,038	<= 2°
FRC	Jaw	E	9–100	3 150	33	3 600	0,5	<= 1°
Jaw (L)	Straight jaw	E	9–60	280	2.7	3 600	0,038	<= 1°
Rigid	Rigid	M	32–125	4 000	118	4 500	Use only with very good alignment	
Universal joint	Universal joint	M	6–55	5 300	– (→ note **9**)	1 800	Ref Cat.	<= 25°
ES-Flex (USA only) (→ note **7**)	Elastomer-in-shear	M	12–152	8 135	85	9 200	1,6	<= 1°

1 Coupling type

E = Elastomer (with rubber (NBR) or urethane typically), or M = metallic (carbon steel typically)

2 Maximum shaft capacity

- Based on metric shaft, with standard keyway dimensions to DIN 6885/1, or equivalent.
- Shallow keys can be used up to 150 mm only.

3 Maximum torque

Values listed are for a service factor of 1,00. Refer to the relevant catalogues for recommended service factors. Note that they vary between coupling types.

4 Maximum temperature

- The range covers standard design, unless stated otherwise. It should be noted that many of the elastomeric type couplings have a number of elastomer materials available to accommodate not only higher ambient/operating temperatures, but also higher torques (although with reduced alignment capability).
- For metallic-type couplings, it is important to note both the seal materials and the type of lubrication (usually grease) at both elevated and lower temperatures.
- Tyre for the SKF Flex Natural Rubber NR (Standard) –50 to +50 °C Chloroprene (FRAS) –15 to +70 °C (as shown in tables)
- Gear and grid: Normal operating temperature for standard seals is 120 °C (intermittent[1)] up to 150 °C). High temperature seals must be used above these temperatures. Maximum temperature for the higher temperature seals is 200 °C (260 °C intermittent[1)]).

5 Chemical resistance

- Many elastomer-type couplings have different elastomer material options for chemical resistance. Note that the torque capability may be reduced!
- For SKF Flex, the "FR" chloroprene Tyre offers better chemical resistance, specifically to oils and greases, than standard natural rubber "NR" compound.
- Chemical resistance for gear and grid couplings is generally limited by the seal material (and any possible, though unlikely, reaction with the lubricant).
- The ES-Flex coupling has 4 different elastomer sleeves available; Standard TPR (Thermo-Plastic Rubber); EPDM, Chloroprene and Hytrel.

6 Adaptability in design

Refers to the ability and ease with which a coupling standard design can be adapted to vertical, spacer, floating shaft, brake types, along with options of either taper bushing, or QD.

7 SKF designation

The **ES-FLEX** (elastomer-in-shear) is listed for the US market only.

8 Ease of installation for **rigid couplings**, while usually with few components, is considered poor, due to the necessity to have accurate alignment (often time-consuming).

9 Coupling capacity

For rigid couplings, the transmittable torque (MT) is usually determined by the shaft diameter rather than the coupling.

[1)] "Intermittent" is defined as a total of less than 1 000 hours of operation

Table 1

SKF designation/name selection criteria	**General type/family**	**Temperature range** (→ note **4**)		**Shock load capability** 1 = poor – 5 = excellent	**Speed capability**	**Torsional stiffness** (Low/Medium/High)	**Ease of installation/ maintenance**	**Chemical resistance** (→ note **5**)	**Adaptability in design** (→ note **6**)
		Min.	Max.						
–	–	°C		–	–	–	–	–	–
Flex	Tyre	–40	+70	1	Moderate	Low	Good	Poor	Very good
Gear	Gear	–20	+120	3,5	Depends on style	High	Good	Good	Very good
Grid	Taper grid	–20	+120	3	Moderate	Medium	Excellent	Good	Very good
Disc	Laminate disc	–20	+250	2	High	Excellent	High	Excellent	Good
Chain	Chain	–35	+120	1	Medium	Medium	Good	Good	Limited
FRC	Jaw	–40	+100	3	Medium	Low	Good	Good	Limited
Jaw (L)	Straight jaw	–40	+100	3	Medium	Medium	Excellent	Good	Spacer
Rigid	Rigid	–40	+250	1	Low	NIL	Poor (→ note **8**)	Excellent	N/A
Universal joint	Universal joint	–40	+150	1	Limited by angle offset	Low	Varies	Good	N/A
ES-Flex (USA only) (→ note **7**)	Elastomer-in-shear	–65	+135	1,5	High	Low	Excellent	Very good	Good

10 Disc coupling misalignment

For the single configuration disc couplings, parallel offset is not permissible.

- When using double disc pack, i.e. with a spacer, the amount of parallel offset is proportional to the DBSE (Distance Between Shaft Ends) dimension.
- Generally there are values for permissible axial movement (δ) for disc couplings. As this movement can result in flexure fatigue, it can be critical in disc coupling selections.

SKF Grid Couplings

In high output (kW) and high torque applications where vibration, shock loads and misalignment occur, SKF Grid Couplings are an excellent choice.

The unique design of the grid and hub teeth enable these couplings to accommodate movement and stresses from all three planes, which can reduce vibration levels by as much as 30%.

The tapered grid element is manufactured from a high strength alloy steel. The grid, which, is the primary wear component of the coupling is designed for quick and easy replacement. Unlike other couplings, the hubs and other components are not disturbed. This makes realignment virtually unnecessary and further reduces downtime and maintenance costs.

Grid couplings with taper bushing hub options

In addition to the standard plain bore hub that is offered with the grid couplings, there is the option to offer a taper bushing as a machined product.

In such circumstances there must be a re-rating of the coupling capacity, along with the reduction in the LTB hub width.

The taper bushing is normally mounted from the inner face of the coupling (Type F or flanged side configuration), but may, in certain sizes, be able to be mounted in the external ("H"or hub) configuration. However, as the hub diameter at the non-grid end is significantly reduced, a check on the location of the setscrews should be made, to avoid any stress fracture.

Page 20 may be used as a general guide as to what bushing fits the grid coupling hub, and by how much the LTB hub is reduced from the standard length (C).

Gear and grid metallic couplings with braking capability

With regard to the SKF range of couplings, both the gear and the grid may be adapted for use in braking systems – typically disc or to a lesser extent nowadays, drum or shoe type brakes.

The selection of the coupling however, needs to be modified to allow for the peak loads encountered during braking (retardation).

Generally it will be the retarding torque imposed by the brake actuation that will determine the required coupling (subject to the maximum shaft capacity).

For brake-type grid couplings, the brake disc (or drum / shoe) would normally be mounted to the driveN (braked) machine. As the gear coupling is symmetrical, either hub can be the driveR or driveN.

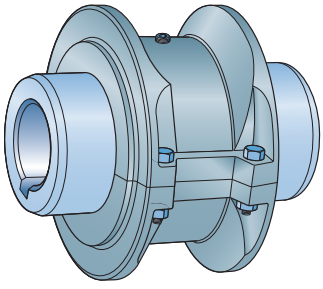

Horizontal split cover → ***page 18***

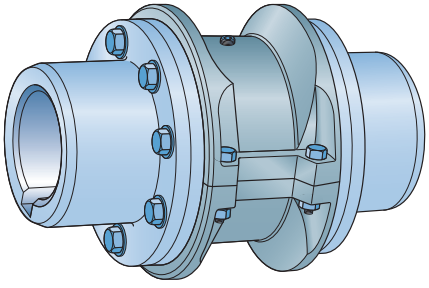

Full spacer → ***page 21***

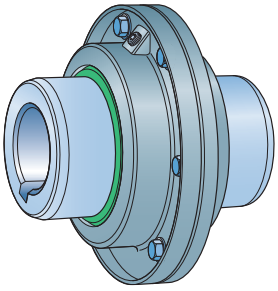

Vertical split cover → ***page 19***

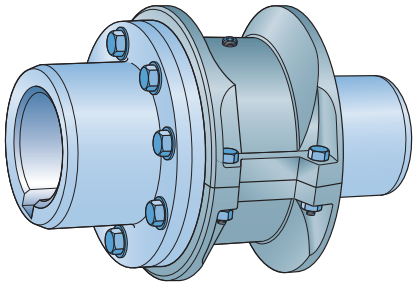

Half spacer → ***page 22***

Selection

Standard selection method

This selection procedure can be used for most motor, turbine, or engine driven applications. The following information is required to select an SKF grid coupling:

- Torque – power [kW]
- Speed [r/min]
- Type of equipment and application
- Shaft diameters
- Shaft gaps
- Physical space limitation
- Special bore or finish information

Exceptions to use of the standard selection method are for high peak loads and brake applications. For these, use the formula selection method or contact SKF.

1 Determine system torque

If torque is not given, use the following formula to calculate for torque (T)

$$\text{System torque} = \frac{\text{Power [kW]} \times 9\,550}{\text{Speed [r/min]}}$$

2 Service factor
Determine the service factor from **tables 9** to **10** on **pages 87** to **88**.

3 Coupling rating
Determine the required minimum coupling rating as shown below:

Coupling rating =
service factor × torque [Nm]

4 Size
Select the appropriate coupling from the torque column of the product tables on **pages 18** to **22** with a value that is equal to or greater than that determined in **step 3** above and check that the chosen coupling can accommodate both driving and driven shafts.

5 Other considerations
Possible other restrictions might be speed [r/min], bore, gap and dimensions.

Standard selection example

Select a coupling to connect a 30 kW, 1 440 r/min electric motor that is driving a boiler feed pump. The motor shaft diameter is 55 mm, pump shaft diameter is 45 mm. Shaft extensions are 140 mm and 110 mm. The coupling to be selected will replace a gear type coupling with a 3 mm gap.

1 Determine system torque
System torque [Nm] =

$$\frac{30 \text{ kW} \times 9\,550}{1\,440 \text{ r/min}} = 199 \text{ Nm}$$

2 Service factor
From **table 8** on **page 87** = 1,50

3 Required coupling rating

1,5 × 199 Nm = 298,5 Nm

4 Size
From product tables on **page 18**, the coupling size 1060 is the proper selection based on the torque rating of 684 Nm which exceeds the required minimum rating of 298,5 Nm as well as accommodating driving and driven shaft diameter requirements.

5 Other considerations
The speed capacity of 4 500 (coupling size 1060) exceeds the required speed of 1 440 r/min. The maximum bore capacity of 57 mm exceeds the required shaft diameters of 55 mm and 45 mm. The resulting service factor is 2,29. This will provide a very good service life for the coupling and a high level of reliability.

Formula method

The standard selection method can be used for most coupling selections. However, the formula method, should be used for:
- high peak loads
- brake applications (if a brake wheel is to be an integral part of the coupling)

By including the system's peak torque, frequency, duty cycle and brake torque ratings, a more accurate result will be obtained.

1 High peak loads
Use one of the following formulas (A, B, or C) for:
- Motors with higher than normal torque characteristics.
- Applications with intermittent operations resulting in shock loads.
- Inertia effects due to frequent stops and starts or repetitive high peak torques.

Peak torque is the maximum torque that can exist in the system. Select a coupling with a torque rating equal to or exceeding the selection torque values obtained from the formulas below.

A Non-reversing peak torque selection
Torque [Nm] = system peak torque

or

Selection torque [Nm] =

$$\frac{\text{System peak kW} \times 9\,550}{\text{r/min}}$$

B Reversing high peak torque
Selection torque [Nm] =

$$\frac{2 \times \text{system peak torque}}{\text{r/min}}$$

C Occasional peak torques (non-reversing)
If a system peak torque occurs less than 1 000 times during the expected coupling life, use the following formula:
Selection torque [Nm] =
0,5 × system peak torque

or

Selection torque [Nm] =

$$\frac{0{,}5 \times \text{system peak kW} \times 9\,550}{\text{r/min}}$$

2 Brake applications
If the torque rating of the brake exceeds the motor torque, use the brake rating as follows:
Selection Torque [Nm] =
Brake torque rating × service factor.

Formula selection example

High peak load

Select a coupling for reversing service to connect a gear drive low speed shaft to a metal forming mill drive. The electric motor rating is 30 kW and the system peak torque at the coupling is estimated to be 9 000 Nm. Coupling speed is 66 r/min at the gear drive output with a shaft gap (between ends) of 180 mm.

1 Type
Refer to product tables on **pages 18** to **22** and select the appropriate coupling type.

2 Required minimum coupling rating
Use the reversing high peak torque formula in step 1B.

2 × 9 000 Nm = 18 000 Nm = Selection torque

3 Size
From product table on **page 18**, size 1130 with a torque rating of 19 900 which exceeds the selection torque of 18 000 Nm.

4 Other considerations
Grid coupling size 1130 has a maximum "DBSE" dimension (distance between shaft ends) of 205 mm; the shaft hub has a maximum bore of 190 mm.

Note: See product table on **page 18**. The T hub has a maximum bore of 170 mm and the allowable speed of 1 800 r/min.

Formula method for brake disc applications

To determine the capacity required for a dynamic brake application:

$$(1a)\ M_{TB} = \frac{kW \times 60 \times 10^3}{2 \times \pi\ r/min} = x\ 2{,}0\ [Nm]$$

which may be simplified to:

$$(1b)\ M_{TB} = \frac{kW \times 9\,550}{r/min} = x\ 2{,}0\ [Nm]$$

Additionally, where the inertias involved (I) are known or can be determined (by reference to the brake position), and the braking deceleration time, in rads/sec (α) is known, the torque may also be determined from:

$$(1c)\ M_{TB} = I \times \alpha \times 2{,}0\ [Nm]$$

The coupling capacity [MT_{nom}] from the catalogue must be greater than the figures obtained in 1(a), 1(b) or 1(c) above.

$$(2)\ M_{TNOM} \geq MTB\ [Nm]$$

Note: Where the brake is only being used as a holding brake, i.e. the system is brought to a stop by other means, prior to application of the brake, standard coupling selection procedures may be used.

(a) **Grid coupling** with brake disc (schematic only) (**→ fig. 1**).

The grid coupling usually consists of the following SKF components:

A major advantage of using the grid-type coupling (TGH) is that the covers are horizontally split, thus allowing ease of access to the grid for replacement. No additional axial spacing is required – something that can be critical, as brake calipers and actuator mechanisms can take up space.

Note:

a. Brake disc dimensioning

- In general the coupling selection for dynamic braking should be no less than 200% of the running (installation) torque, unless the results of a full analysis of the inertias involved are known, along with the desired stopping time.
- The diameter of the brake disc (Db), will be determined from the required torque, and the caliper's force at the effective diameter (Dcal in the above diagrams) at which the caliper unit (or units) will engage.
- Multiple calipers, typically no more than two, are generally set 180° apart. The thickness of the disc, and whether plain or ventilated, will also be determined by
  - the inertias Σ I (kgm^2) being retarded, relative to the brake position,
  - the stopping time t_s (in seconds) required

b. Brake disc (general)

- International standards, such as DIN 15435, have tables of recommended diameters and thicknesses (or widths) for both disc and drum (shoe) type brakes. (Many brake-system manufacturers also have their own factory standards).
- Disc material will vary depending on the application, capacity and the amount of energy that is required to be dissipated during engagement. Typically however, they are made of spheroidal graphite (nodular) cast iron (e.g. DIN GGG40, AISI 60-40-18; JIS FCD400).
- Thickness variation overall should be <0,05 mm total, and surface finish ≤0,002 µm.

Table 1

Typical grid coupling brake rating capacities (M_{TMAX})

SKF Coupling Size (PHE 1XXXTGHBD)	Nominal Standard Disc O/Dia. D_b x T	Max. Brake Rating of Coupling MTMAX (Nm)
1020 TGHBD	200 x 6,4	10,8
1030 TGHBD	250 x 6,4	35,2
1040 TGHBD	250 x 6,4	65
1050 TGHBD	250 x 6,4	118
1060 TGHBD	305 x 6,4	208,8
1070 TGHBD	305 x 6,4	330
1080 TGHBD	305 x 6,4	637
1090 TGHBD	405 x 13	1,085
1100 TGHBD	405 x 13	1,898
1110 TGHBD	450 x 13	2,847
1120 TGHBD	510 x 13	4,339
1130 TGHBD	560 x 13	6,493
1140 TGHBD	610 x 13	8,813

Larger sizes available on request.

Engineering data

For additional useful information on grid couplings, such as an interchange guide, misalignment capability, puller bolt hole, inertia and standard stock spacer lengths data, please refer to **tables 1** to **7**.

Order data

A complete grid coupling consists of 2 hubs, a cover and a grid. For further details and options refer to **table 8**, **pages 14** and **15**.

Fig. 1

Grid coupling with disc brake

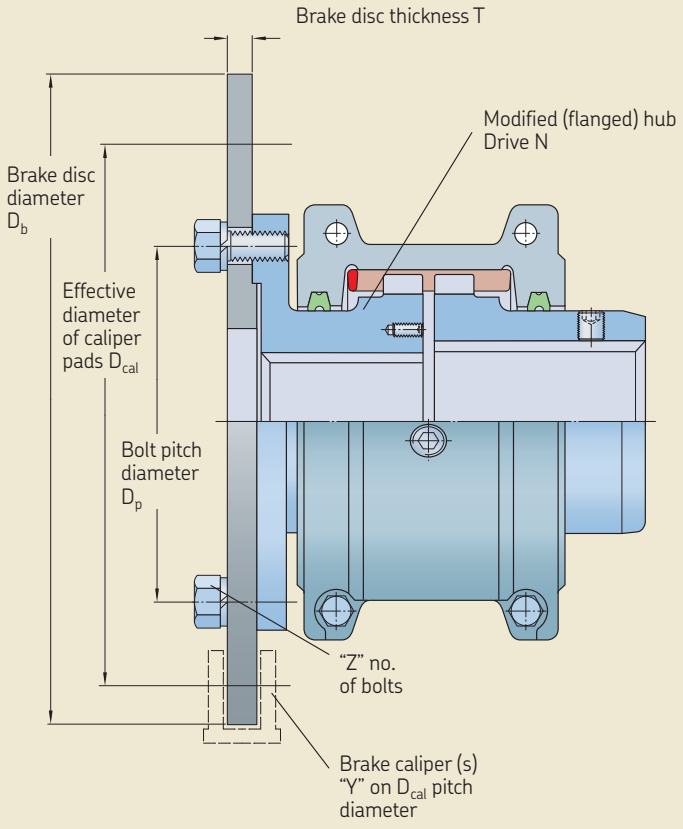

Table 2

SKF grid coupling interchange guide

Horizontal split cover

SKF	Falk	Morse/ Browning	Dodge	Kop-Flex	Lovejoy	Bibby
PHE 1020TGH	1020T10	GF2020H	1020T10	1020H	1020	2020H
PHE 1030TGH	1030T10	GF2030H	1030T10	1030H	1030	2030H
PHE 1040TGH	1040T10	GF2040H	1040T10	1040H	1040	2040H
PHE 1050TGH	1050T10	GF2050H	1050T10	1050H	1050	2050H
PHE 1060TGH	1060T10	GF2060H	1060T10	1060H	1060	2060H
PHE 1070TGH	1070T10	GF2070H	1070T10	1070H	1070	2070H
PHE 1080TGH	1080T10	GF2080H	1080T10	1080H	1080	2080H
PHE 1090TGH	1090T10	GF2090H	1090T10	1090H	1090	2090H
PHE 1100TGH	1100T10	GF2100H	1100T10	1100H	1100	2100H
PHE 1110TGH	1110T10	GF2110H	1110T10	1110H	1110	2110H
PHE 1120TGH	1120T10	GF2120H	1120T10	1120H	1120	2120H
PHE 1130TGH	1130T10	GF2130H	1130T10	1130H	1130	2130H
PHE 1140TGH	1140T10	GF2140H	1140T10	1140H	1140	2140H
PHE 1150TGH	1150T10	–	–	–	1150	–
PHE 1160TGH	1160T10	–	–	–	1160	–
PHE 1170TGH	1170T10	–	–	–	1170	–
PHE 1180TGH	1180T10	–	–	–	1180	–
PHE 1190TGH	1190T10	–	–	–	1190	–
PHE 1200TGH	1200T10	–	–	–	1200	–

Table 3

SKF grid coupling interchange guide

Vertical split cover

SKF	Falk	Morse/ Browning	Dodge	Kop-Flex	Lovejoy	Bibby
PHE 1020TGV	1020T20	GF2020V	1020T20	1020V	1020	2020V
PHE 1030TGV	1030T20	GF2030V	1030T20	1030V	1030	2030V
PHE 1040TGV	1040T20	GF2040V	1040T20	1040V	1040	2040V
PHE 1050TGV	1050T20	GF2050V	1050T20	1050V	1050	2050V
PHE 1060TGV	1060T20	GF2060V	1060T20	1060V	1060	2060V
PHE 1070TGV	1070T20	GF2070V	1070T20	1070V	1070	2070V
PHE 1080TGV	1080T20	GF2080V	1080T20	1080V	1080	2080V
PHE 1090TGV	1090T20	GF2090V	1090T20	1090V	1090	2090V
PHE 1100TGV	1100T20	GF2100V	1100T20	1100V	1100	2100V
PHE 1110TGV	1110T20	GF2110V	1110T20	1110V	1110	2110V
PHE 1120TGV	1120T20	GF2120V	1120T20	1120V	1120	2120V
PHE 1130TGV	1130T20	GF2130V	1130T20	1130V	1130	2130V
PHE 1140TGV	1140T20	GF2140V	1140T20	1140V	1140	2140V
PHE 1150TGV	1150T20	–	–	–	1150	–
PHE 1160TGV	1160T20	–	–	–	1160	–
PHE 1170TGV	1170T20	–	–	–	1170	–
PHE 1180TGV	1180T20	–	–	–	1180	–
PHE 1190TGV	1190T20	–	–	–	1190	–
PHE 1200TGV	1200T20	–	–	–	1200	–

Table 4

Puller bolt hole data (grid)

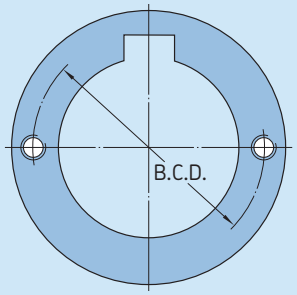

Size	B.C.D.[1]	Bolt size
–	mm	Tr (UNC)
PHE 1100TGRSB	133	$^3/_8$"-16
PHE 1110TGRSB	149	$^1/_2$"-13
PHE 1120TGRSB	168	$^1/_2$"-13
PHE 1130TGRSB	197	$^5/_8$"-11
PHE 1140TGRSB	236	$^3/_4$"-10
PHE 1150TGRSB	263	$^3/_4$"-10
PHE 1160TGRSB	298	$^3/_4$"-10
PHE 1170TGRSB	338	1"-8
PHE 1180TGRSB	378	1"-8
PHE 1190TGRSB	413	1"-8
PHE 1200TGRSB	456	1"-8
PHE 1210TGRSB	497	1 $^1/_2$"-6
PHE 1220TGRSB	541	1 $^1/_2$"-6
PHE1230TGRSB	586	1 $^1/_2$"-6
PHE1240TGRSB	633	1 $^1/_2$"-6
PHE1250TGRSB	690	1 $^1/_2$"-6
PHE1260TGRSB	749	1 $^1/_2$"-6

[1] B.C.D. = Bolt Centre Diameter

Table 5

Misalignment capability

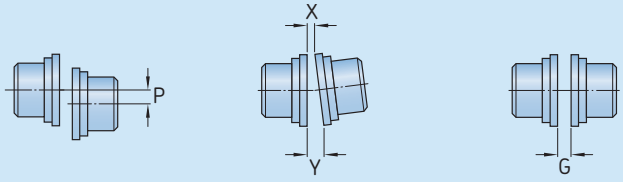

Size	Recommended installation Parallel offset P	Angular $^1/_{16}$° X-Y	Operating Parallel offset P	Angular $^1/_4$° X-Y	Normal gap ±10%	Tightening torque
–	mm	–	–	mm	–	Nm
1020	0,15	0,06	0,30	0,24	3	11,30
1030	0,15	0,07	0,30	0,29	3	11,30
1040	0,15	0,08	0,30	0,32	3	11,30
1050	0,20	0,10	0,40	0,39	3	22,60
1060	0,20	0,11	0,40	0,45	3	22,60
1070	0,20	0,12	0,40	0,50	3	22,60
1080	0,20	0,15	0,40	0,61	3	22,60
1090	0,20	0,17	0,40	0,70	3	22,60
1100	0,25	0,20	0,50	0,82	4,50	35,00
1110	0,25	0,22	0,50	0,90	4,50	35,00
1120	0,28	0,25	0,56	1,01	6	73,00
1130	0,28	0,30	0,56	1,19	6	73,00
1140	0,28	0,33	0,56	1,34	6	73,00
1150	0,30	0,39	0,60	1,56	6	73,40
1160	0,30	0,44	0,60	1,77	6	73,40
1170	0,30	0,50	0,60	2,00	6	146,90
1180	0,38	0,56	0,76	2,26	6	146,90
1190	0,38	0,61	0,76	2,44	6	146,90
1200	0,38	0,68	0,76	2,72	6	259,90

Order data

Coupling type	Hubs Solid bore	Qty	Bored to size[1]	Qty	Taper bushing on one side	Qty	Taper bushing on both sides	Qty
Horizontal split cover	PHE 1050TGRSB	2 or	PHE 1050TG...MM	2 or	PHE 1050TGHTB	1	PHE 1050TGHTB	2
	–	–	–	–	PHE 1050TGRSB	1	–	–
Vertical split cover	PHE 1050TGRSB	2 or	PHE 1050TG... MM	2 or	PHE 1050TGVTB	1	PHE 1050TGVTB	2
	–	–	–	–	PHE 1050TGRSB	1	–	–
Full spacer	PHE 1050TGS-SHRSB	2 or	PHE 1050TGS-SH...MM	2 or	PHE 1050TGS-SHTB	1	PHE 1050TGS-SHTB	2
	–	–	–	–	PHE 1050TGS-SHRSB	1	–	–
Half spacer	PHE 1050TGRSB	1 and	–	–	–	–	–	–
	PHE 1050TGS-SHRSB	1 or	PHE 1050TGS-SH... MM	1	–	–	–	–
Brake capability option[2]	PHE 1050TGRSB	–	PHE 1050TGX...MM	–	–	–	–	–
	–	–	PHE 1050TGFLG...MM	–	–	–	–	–

[1] For bored-to-size designations, add bore size. For example, PHE 1050TG25MM
The cover assembly kit is supplied with the cover. The spacer hub assembly kit is supplied with the spacer hub set.
The assembly kit is supplied with the cover and includes oil seals, gasket, bolts and lock-nuts.
For coupling sizes 1020 to 1090, SKF will supply the requested bore size with a clearance fit and standard keyways unless otherwise specified. For sizes 1100 and above, interference fit with standard keyways will be supplied unless otherwise specified.

Table 6

Full spacer coupling

TGFS Standard stock spacer lengths (DBSE = Distance between shaft ends)

DBSE		Pump std	Coupling size 1020	1030	1040	1050	1060	1070	1080	1080	1090	1100	1110
–	in.	–	–										
89	**3.50**	ANSI	X	X	X	–	–	–	–	–	–	–	–
100	**3.94**	ISO	X	X	X	–	–	–	–	–	–	–	–
108	**4.25**	MISC	X	X	X								
111	**4.38**	ANSI	X	X	X	X	–	–	–	–	–	–	–
119	**4.69**	MISC	X	X	X	X	–	–	–	–	–	–	–
127	**5.00**	ANSI	X	X	X	X	X	X	–	–	–	–	–
133	**5.22**	MISC	–	–	X	–	–	–	–	–	–	–	–
137	**5.38**	MISC	–	X	X	–	–	–	–	–	–	–	–
140	**5.51**	ISO	X	X	X	X	X	X	–	–	–	–	–
144	**5.66**	MISC	–	X	X	–	–	–	–	–	–	–	–
148	**5.81**	MISC	–	X	X	X	–	–	–	–	–	–	–
152	**5.97**	MISC	–	–	X	X	–	–	–	–	–	–	–
155	**6.12**	MISC	–	X	X	X	X	X	–	–	–	–	–
176	**6.94**	MISC	X	X	X	X	X	–	–	–	–	–	–
178	**7.00**	ANSI	–	–	–	–	–	X	X	–	–	–	–
180	**7.09**	ISO	–	–	X	X	–	X	X	X	–	–	–
184	**7.25**	ANSI	–	X	X	X	X	X	X	X	–	–	–
203	**8.00**	MISC	–	–	–	–	–	–	–	–	X	–	–
218	**8.59**	MISC	–	–	–	–	–	–	X	–	–	–	–
219	**8.62**	MISC	–	–	–	–	X	X	–	–	–	–	–
226	**8.88**	MISC	–	–	–	–	–	–	–	–	X	–	–
248	**9.75**	ANSI	–	–	–	–	X	X	X	X	X	X	–
250	**9.84**	ISO	–	–	–	–	–	–	–	–	X	X	–
252	**9.94**	MISC	–	–	–	–	–	–	X	–	–	–	–
282	**11.09**	MISC	–	–	–	–	–	–	X	–	–	–	–
311	**12.25**	ANSI	–	–	–	–	X	X	X	X	–	–	–
357	**14.05**	MISC	–	–	–	–	–	–	–	–	–	X	–

Table 7

Moment of inertia

Size	Horizontal	Vertical
–	kg/m²	kg/m²
1020	0,0014	0,0016
1030	0,0022	0,0024
1040	0,0033	0,0035
1050	0,0072	0,0074
1060	0,012	0,011
1070	0,019	0,017
1080	0,045	0,042
1090	0,079	0,079
1100	0,179	0,179
1110	0,270	0,270
1120	0,512	0,486
1130	0,99	1,065
1140	1,85	1,89
1150	3,49	3,29
1160	5,82	6,01
1170	10,41	10,42
1180	18,30	–
1190	26,17	–
1200	43,55	–

The values are based on hubs with no bore.

Table 8

Coupling type	Cover	Qty	Grid	Qty	Spacer hub set	Qty	Brake disc	Qty	Bolt set	Qty
Horizontal split cover	PHE 1050TGHCOVER	1	PHE 1050TGGRID	1	–	–	–	–	–	–
–	–	–	–	–	–	–	–	–	–	–
Vertical split cover	PHE 1050TGHCOVER	1	PHE 1050TGGRID	1	–	–	–	–	–	–
–	–	–	–	–	–	–	–	–	–	–
Full spacer	PHE 1050TGHCOVER	1	PHE 1050TGGRID	1	PHE 1050TGFS-SPACERX...MM	1	–	–	–	–
–	–	–	–	–	–	–	–	–	–	–
–	PHE 1050TGHCOVER	1	–	–	PHE 1050TGHS-SPACERX... MM	1	–	–	–	–
–	–	–	–	–	–	–	–	–	–	–
Brake capability option[2)]	PHE 1050TGHCOVER	1	PHE 1050TGGRID	1	–	–	PHE 1050TGDISC...MM	1	PHE 1050TGDBOLT	1
–	–	–	–	–	–	–	–	–	–	–

Installation

The performance of the coupling depends largely upon how it is installed, aligned and maintained.

SKF Grid Couplings are designed to operate in either a horizontal or a vertical position without modification.

1 Mount the seals and the hubs

Clean all metal parts using non-flammable solvent and check hubs, shafts and keyways for burrs and remove if necessary. Lightly coat the seals with grease and place well back on the shafts before mounting the hubs. Mount the hubs on their respective shafts so that each hub face is flush with the end of the shafts (→ **fig. 1**).

2 Gap and angular alignment

Using a feeler gauge equal in thickness to the gap specified in **table 5** on **page 14**. Insert the gauge as shown in image (→ **fig. 2**) to the same depth at 90° intervals and measure the clearance between the gauge and hub face. The difference in the minimum and the maximum measurements must not exceed the angular limits specified in **table 5** on **page 14**.

3 Offset alignment

Align the two hubs so that a straight edge rests squarely on both hubs and also at 90° intervals (Fig. **3**). The clearance must not exceed the parallel offset installation limits specified in **table 5** on **page 14**. Tighten all foundation bolts and repeat **steps 2** and **3**. Realign the application if necessary.

4 Mount the grid

Pack the gap and all of the grooves in the two hubs with a specified lubricant (→ **page 98**) before mounting the grid. Fit the grid over the hubs by starting at one cut end, work the coils of the grid tooth by tooth in one direction and seat firmly as you go with a soft mallet (→ **fig. 4**).

5 Pack with grease and assemble the covers

Pack the spaces between and around the grid with as much lubricant as possible and wipe off the excess so that it is flush with the top of the grid (→ **fig. 5**). Position the seals on hubs so they line up with the grooves in the cover. Position gaskets on the flanges of the lower cover half and assemble the covers so that the match marks are on the same side. Push gaskets in until they stop against the seals and secure cover halves with the fasteners provided and tighten them accordingly. Make sure that the gaskets stay in position during this tightening procedure (→ **fig. 7**). Once the coupling is completely assembled, remove both of the lubrication plugs in the cover and insert a lubrication fitting. Then, pump in the appropriate lubricant until it is forced out of the opposite lubrication hole (→ **fig. 8**). Replace the two lubrication plugs and the installation is complete.

Grid removal

Whenever it is necessary to replace the grid, first remove the cover halves and set aside. Beginning at the cut end of the grid, carefully insert a screwdriver into the loop (→ **fig. 9**). Using the hub teeth for leverage, gradually pry the grid up, alternating sides while working around the coupling.

SKF does not recommend re-using the removed grid.

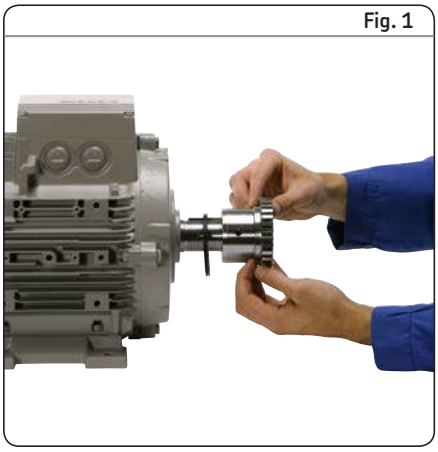
Fig. 1

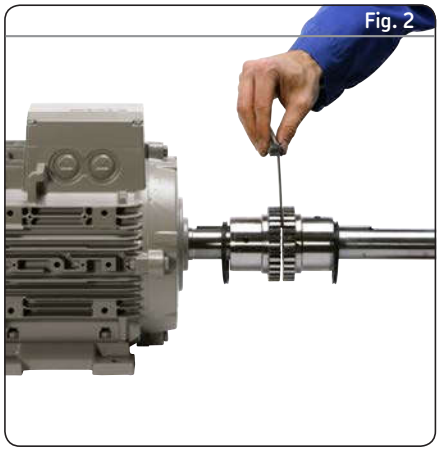
Fig. 2

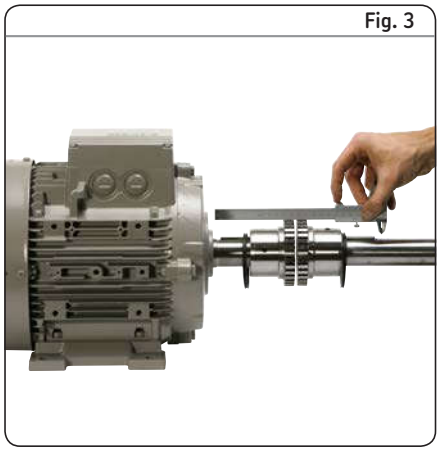
Fig. 3

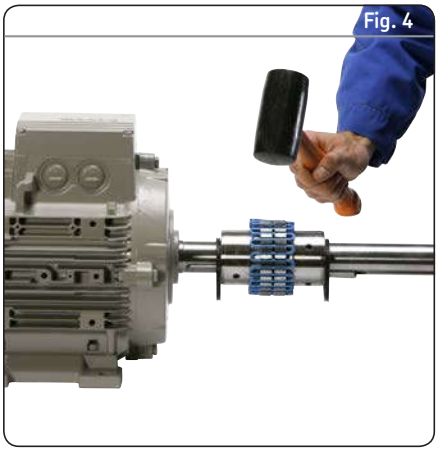
Fig. 4

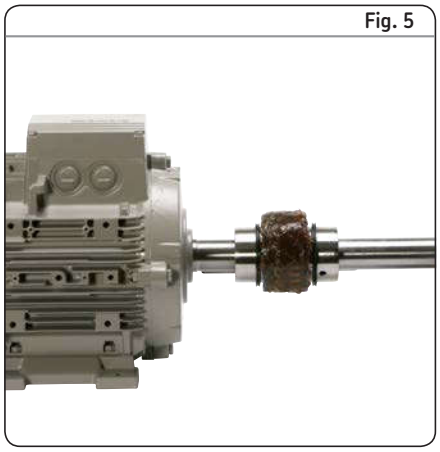
Fig. 5

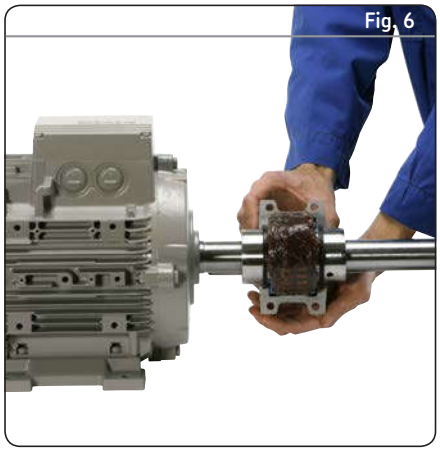
Fig. 6

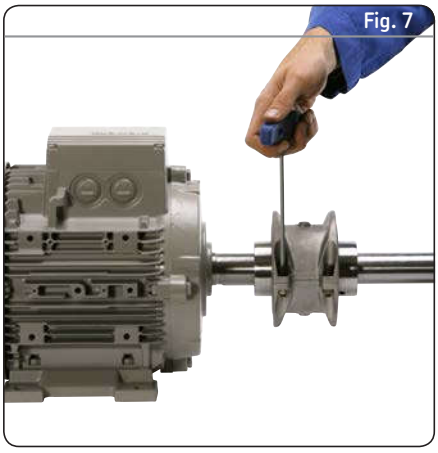
Fig. 7

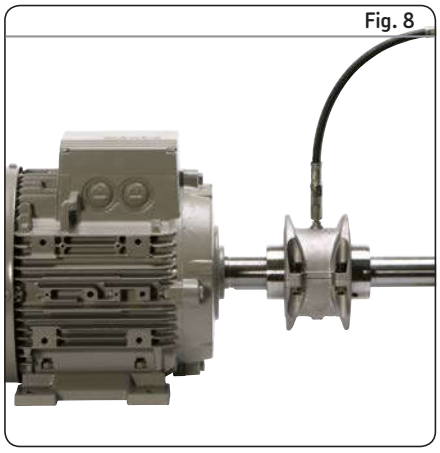
Fig. 8

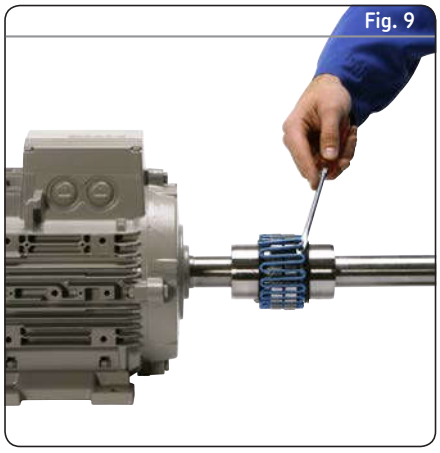
Fig. 9

Horizontal split cover

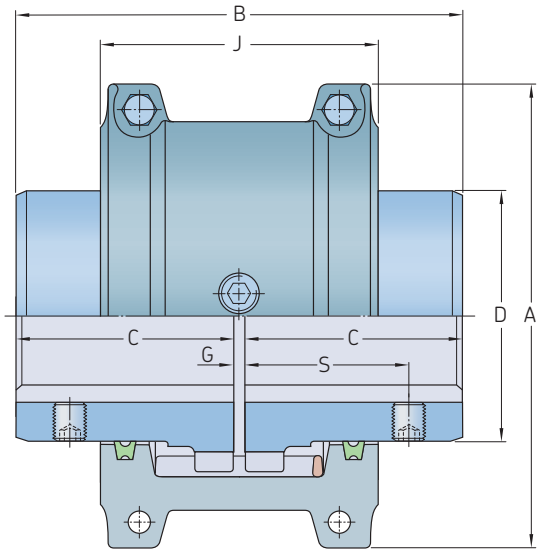

Cover profiles

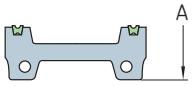

Sizes 1020–1140

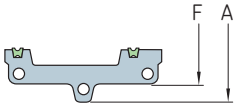

Sizes 1150–1200

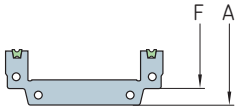

Sizes 1210–1260

Size	Power per 100 r/min	Rated torque	Speed	Bore diameter		Dimensions							Gap			Lubricant weight	Coupling weight without bore
						A	B	C	D	J	F	S	G				
			Max.	Min.	Max.								Min.	Normal	Max.		
–	kW	Nm	r/min	mm									mm			kg	
1020 TGH	0,54	52	4 500	13	28	101,6	98,2	47,5	39,7	66	–	39,1	1,5	3	4,5	0,027	1,9
1030 TGH	1,6	149	4 500	13	25	110	98,2	47,5	49,2	68,3	–	39,1	1,5	3	4,5	0,040	2,6
1040 TGH	2,6	249	4 500	13	43	117,5	104,6	50,8	57,2	70	–	40,1	1,5	3	4,5	0,054	3,4
1050 TGH	4,6	435	4 500	13	50	138	123,6	60,3	66,7	79,5	–	44,7	1,5	3	4,5	0,068	5,4
1060 TGH	7,2	684	4 500	20	56	150,5	130,0	63,5	76,2	92	–	52,3	1,5	3	4,5	0,086	7,3
1070 TGH	10,4	994	4 125	20	67	161,9	155,4	76,2	87,3	95	–	53,8	1,5	3	4,5	0,113	10
1080 TGH	21,5	2 050	3 600	27	80	194	180,8	88,9	104,8	116	–	64,5	1,5	3	6	0,172	18
1090 TGH	39,0	3 730	3 600	27	95	213	199,8	98,4	123,8	122	–	71,6	1,5	3	6	0,254	25
1100 TGH	65,7	6 280	2 440	42	110	250	246,2	120,6	142,1	155,5	–	–	1,5	5	9,5	0,426	42
1110 TGH	97,6	9 320	2 250	42	120	270	259,0	127,0	160,3	161,5	–	–	1,5	5	9,5	0,508	54
1120 TGH	143,0	13 700	2 025	61	140	308	304,4	149,2	179,4	191,5	–	–	1,5	6	13	0,735	81
1130 TGH	208,0	19 900	1 800	67	170	346	329,8	161,9	217,5	195	–	–	1,5	6	13	0,907	121
1140 TGH	299,0	28 600	1 650	67	200	384	374,4	184,2	254,0	201	–	–	1,5	6	13	1,13	178
1150 TGH	416,0	39 800	1 500	108	215	453,1	371,8	182,9	269,2	271,3	391,2	–	1,5	6	13	1,95	234
1160 TGH	586,0	55 900	1 350	121	240	501,4	402,2	198,1	304,8	278,9	436,9	–	1,5	6	13	2,81	317
1170 TGH	781,0	74 600	1 225	134	280	566,4	437,8	215,9	355,6	304,3	487,2	–	1,5	6	13	3,49	448
1180 TGH	1 080,0	103 000	1 100	153	300	629,9	483,6	238,8	393,7	321,1	554,7	–	1,5	6	13	3,76	619
1190 TGH	1 430,0	137 000	1 050	153	335	675,6	524,2	259,1	436,9	325,1	607,8	–	1,5	6	13	4,40	776
1200 TGH	1 950,0	186 000	900	178	360	756,9	564,8	279,4	497,8	355,6	660,4	–	1,5	6	13	5,62	1 057
1210 TGH	2 611,0	249 000	820	178	390	844,5	622,3	304,8	533,4	431,8	750,8	–	1,5	13	19	10,5	1 425
1220 TGH	3 523,0	336 000	730	203	420	920,7	662,9	325,1	571,5	490,2	822,2	–	1,5	13	1	16,1	1 785
1230 TGH	4 555,0	435 000	680	203	450	1 003,3	703,8	345,4	609,6	546,1	–	–	3,0	13	22	24,0	2 265
1240 TGH	5 853,0	559 000	630	254	480	1 087,1	749,6	368,3	647,7	647,7	–	–	3,0	13	22	33,8	2 950
1250 TGH	7 812,0	746 000	580	– [1]	– [1]	1 181,1	815,5	401,3	711,2	698,5	–	–	3,0	13	22	50,1	3 835
1260 TGH	9 759,0	932 000	540	– [1]	– [1]	1 260,9	876,5	431,8	762,0	762,0	–	–	3,0	13	25	67,2	4 680

Horizontal split cover couplings are high performance, general purpose and easy to maintain.
The grid is designed to be replaced without disturbing any other component in the drive.
[1] Contact SKF for bore dimensions of these coupling sizes

Vertical split cover

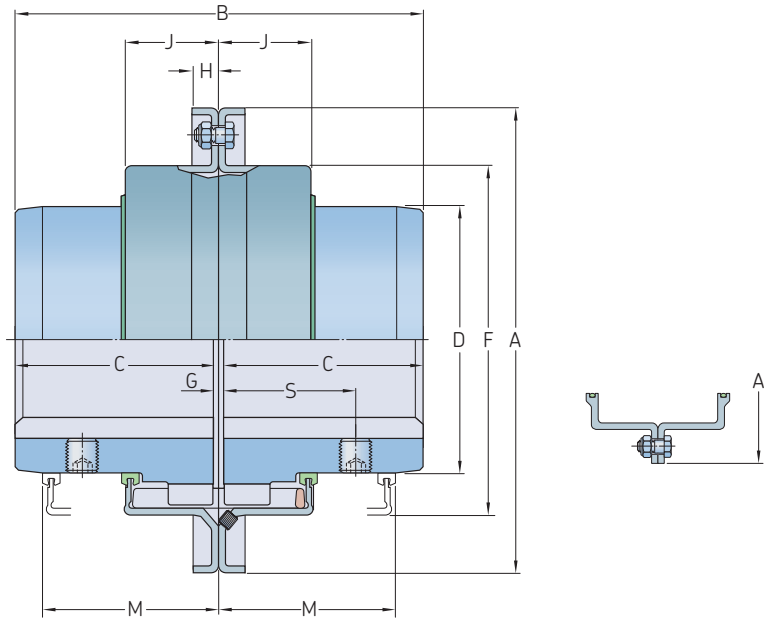

Size	Power per 100 r/min	Rated torque	Speed	Bore diameter		Dimensions									Gap			Lubricant weight	Coupling weight without bore
			Max.	Min.	Max.	A	B	C	D	F	H	J	M	S	G Min.	Normal	Max.		
–	kW	Nm	r/min	mm											mm			kg	
1020 TGV	0,54	52	6 000	12	30	111,1	98,0	47,5	39,7	64,3	9,7	24,2	47,8	39,1	1,5	3	4,5	0,027	2,0
1030 TGV	1,6	149	6 000	12	36	120,7	98,0	47,5	49,2	73,8	9,7	25,0	47,8	39,1	1,5	3	4,5	0,040	2,6
1040 TGV	2,6	249	6 000	12	44	128,5	104,6	50,8	57,2	81,8	9,7	25,7	50,8	40,1	1,5	3	4,5	0,054	3,4
1050 TGV	4,6	435	6 000	12	50	147,6	123,6	60,3	66,7	97,6	11,9	31,2	60,5	44,7	1,5	3	4,5	0,068	5,4
1060 TGV	7,2	684	6 000	19	57	162,0	130,0	63,5	76,2	111,1	12,7	32,2	63,5	52,3	1,5	3	4,5	0,086	7,3
1070 TGV	10,4	994	5 500	19	65	173,0	155,4	76,2	87,3	122,3	12,7	33,7	66,5	53,8	1,5	3	4,5	0,113	10
1080 TGV	21,5	2 050	4 750	27	79	200,0	180,8	88,9	104,8	149,2	12,7	44,2	88,9	64,5	1,5	3	6	0,172	18
1090 TGV	39,0	3 730	4 000	27	95	231,8	199,8	98,4	123,8	168,3	12,7	47,7	95,2	71,6	1,5	3	6	0,254	25
1100 TGV	65,7	6 280	3 250	41	107	266,7	245,7	120,6	142,1	198,0	15,7	60,0	120,7	–	1,5	5	9,5	0,426	42
1110 TGV	97,6	9 320	3 000	41	117	285,8	258,5	127,0	160,3	216,3	16,0	64,2	124,0	–	1,5	5	9,5	0,508	54
1120 TGV	143,0	13 700	2 700	60	136	319,0	304,4	149,2	179,4	245,5	17,5	73,4	142,7	–	1,5	6	12,5	0,735	81
1130 TGV	208,0	19 900	2 400	66	165	377,8	329,8	161,9	217,5	283,8	20,6	75,1	146,0	–	1,5	6	12,5	0,907	122
1140 TGV	299,0	28 600	2 200	66	184	416,0	371,6	184,2	254,0	321,9	20,6	78,2	155,4	–	1,5	6	12,5	1,13	180
1150 TGV	416,0	39 800	2 000	108	203	476,3	371,8	182,9	269,2	374,4	19,3	106,9	203,2	–	1,5	6	12,5	1,95	230
1160 TGV	586,0	55 900	1 750	120	228	533,4	402,2	198,1	304,8	423,9	30,0	114,3	215,9	–	1,5	6	12,5	2,81	321
1170 TGV	781,0	74 600	1 600	133	279	584,2	437,8	215,9	355,6	474,7	30,0	119,4	226,1	–	1,5	6	12,5	3,49	448
1180 TGV	1 080,0	103 000	1 400	152	311	630,0	483,6	238,8	393,7	–	–	130,0	265,0	–	1,5	6	12,5	3,76	591
1190 TGV	1 430,0	137 000	1 300	152	339	685,0	524,2	259,1	436,9	–	–	135,0	275,0	–	1,5	6	12,5	4,40	761
1200 TGV	1 950,0	186 000	1 100	177	361	737,0	564,8	279,4	497,8	–	–	145,0	295,0	–	1,5	6	12,5	5,62	1 021

Vertical split cover couplings are high performance, general purpose and easy to maintain.
The grid is designed to be replaced without disturbing any other component in the drive. The vertical cover allows for higher running speeds.

Grid couplings with taper bushing option

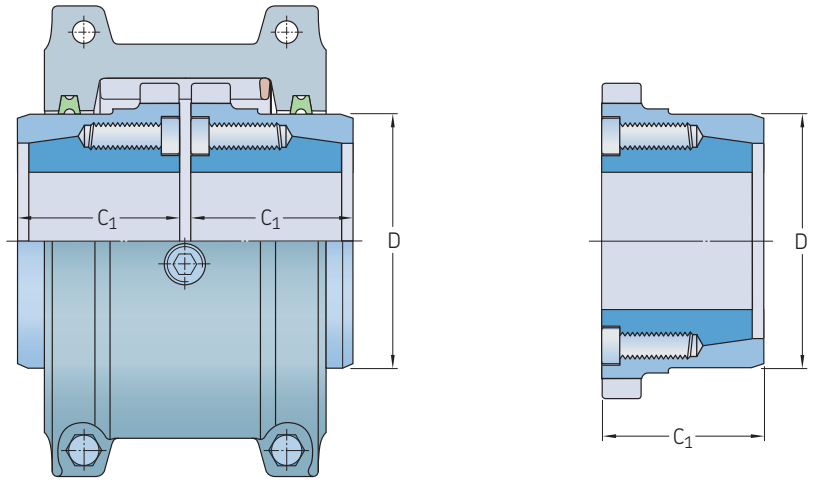

Size	Taper bushing designation	Bushing torque capacity[1]	Bore diameter range[1]		Reduced hub length	Hub length reduction	Hub diameter
			Min.	Max.	C_1		D
–	–	Nm	mm		mm	mm	mm
1020	Not available	–	–	–	–	–	–
1030	PHF TB1108	147	13	25	45	2,5	49,2
1040	PHF TB 1108	147	13	25	45	5,8	57,2
1050	PHF TB 1215	405	13	32	50	10,3	66,7
1060	PHF TB 1615	485	13	42	55	8,5	76,2
1070	PHF TB 2012	810	13	50	55	21,2	87,3
1080	PHF TB 2525	1275	25	65	70	18,9	104,8
1090	PHF TB 3030	2710	24	80	83	15,4	123,8
1100	PHF TB 3030	2710	24	80	90	30,6	142,1
1110	PHF TB 3535	5060	32	91	95	32	160,3
1120	PHF TB 4040	8727	37	103	115	34,2	179,4

[1] Bore capacities are based on standard ISO keyway dimensions to ISO773 (DIN6885/1) unless otherwise stated. For full coupling dimensions and technical details, refer to **page 14**.
[2] The limitations in the couplings' torque capacity with when fitted with a taper bushing, is based on the maximum recommended torque for the relevant taper bushing with a standard keyway. For this reason it becomes impractical, and uneconomical, to offer the larger sizes with a taper bushing option. Different bushing type options, such as FX and QD, are also available for certain sizes. Please contact SKF.

Full spacer

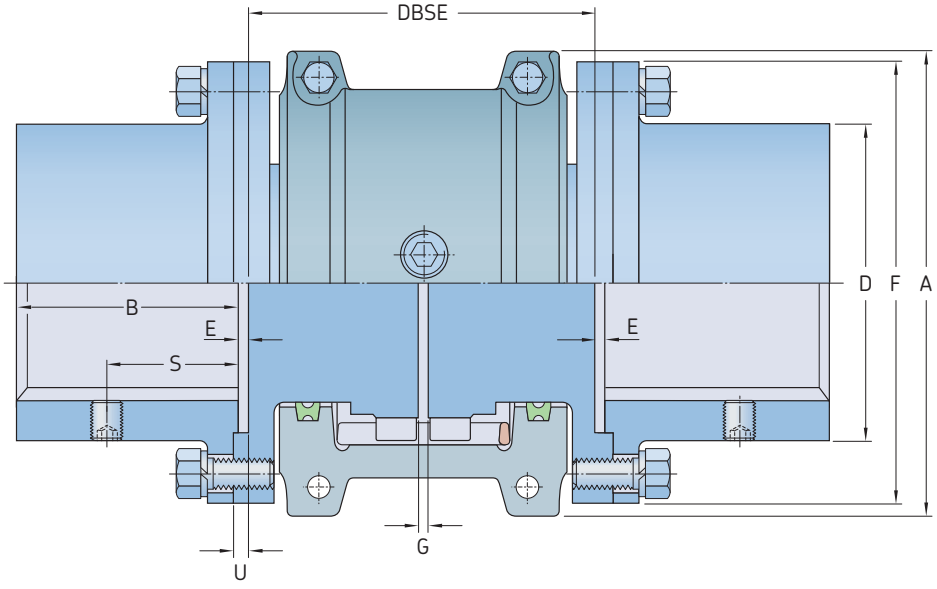

Size	Power per 100 r/min	Rated torque	Speed	Bore diameter		Dimensions									Gap		Flange bolts	Lubricant weight	Coupling weight without bore and min. DBSE
						A	B	DBSE Min.	DBSE Max.	D	E	F	S	U	G				
			Max.	Min.	Max.										Min.	Normal	Qty		
–	kW	Nm	r/min	mm											mm			kg	
1020 TGFS	0,54	52	3 600	12	35	101,6	35	89	203	52	0,8	86	27,4	1,8	1,5	5	4	0,027	3,9
1030 TGFS	1,6	149	3 600	12	43	110	41	89	216	59	0,8	94	31,5	1,8	1,5	5	8	0,040	5,2
1040 TGFS	2,6	249	3 600	12	56	117,5	54	89	216	78	0,8	113	27,4	1,8	1,5	5	8	0,054	8,4
1050 TGFS	4,6	435	3 600	12	67	138	60	112	216	87	0,8	126	40,6	1,8	1,5	5	8	0,068	12,8
1060 TGFS	7,2	684	3 600	19	80	150,5	73	127	330	103	1,8	145	43,2	2,8	1,5	5	8	0,086	20,5
1070 TGFS	10,4	994	3 600	19	85	161,9	79	127	330	109	1,8	153	46,7	2,8	1,5	5	12	0,113	24,8
1080 TGFS	21,5	2 050	3 600	27	95	194	89	184	406	122	1,8	178	49,8	2,8	1,5	5	12	0,172	40
1090 TGFS	39,0	3 730	3 600	27	110	213	102	184	406	142	1,8	210	56,9	2,8	1,5	5	12	0,254	60
1100 TGFS	65,7	6 280	2 440	41	130	250	90	203	406	171	1,6	251	–	3,2	1,5	6,5	12	0,426	90,2
1110 TGFS	97,6	9 320	2 250	41	150	270	104	210	406	196	1,6	277	–	3,2	1,5	6,5	12	0,508	119
1120 TGFS	143,0	13 700	2 025	60	170	308	119	246	406	225	1,6	319	–	4	1,5	9,5	12	0,735	178
1130 TGFS	208,0	19 900	1 800	66	190	346	135	257	406	238	1,6	346	–	4	1,5	9,5	12	0,907	237
1140 TGFS	299,0	28 600	1 650	66	210	384	152	267	406	266	1,6	386	–	4	1,5	9,5	12	1,13	327
1150 TGFS	416,0	39 800	1 500	108	270	453,1	173	345	371	334	5,1	425	–	–	1,5	9,5	14	1,95	462
1160 TGFS	586,0	55 900	1 350	120	290	501,4	186	356	406	366	6,6	457	–	–	1,5	9,5	14	2,81	566
1170 TGFS	781,0	74 600	1 225	133	340	566,4	220	384	445	425	8,4	527	–	–	1,5	9,5	16	3,49	856
1180 TGFS	1 080,0	103 000	1 100	133	340	629,9	249	400	490	451	5,1	591	–	8,1	1,5	9,5	16	3,76	1 135
1190 TGFS	1 430,0	137 000	1 050	152	380	675,6	276	411	530	508	5,1	660	–	8,1	1,5	9,5	18	4,40	1 525
1200 TGFS	1 950,0	186 000	900	177	400	756,9	305	445	575	530	6,1	711	–	9,1	1,5	9,5	18	5,62	1 910

SKF horizontal split cover full spacer couplings are designed to accommodate long distances between the shafts that are to be connected.
This coupling gives you the added advantage of being able to drop out the entire centre section of the coupling for easy service. This coupling is an ideal choice for pumps.

Half spacer

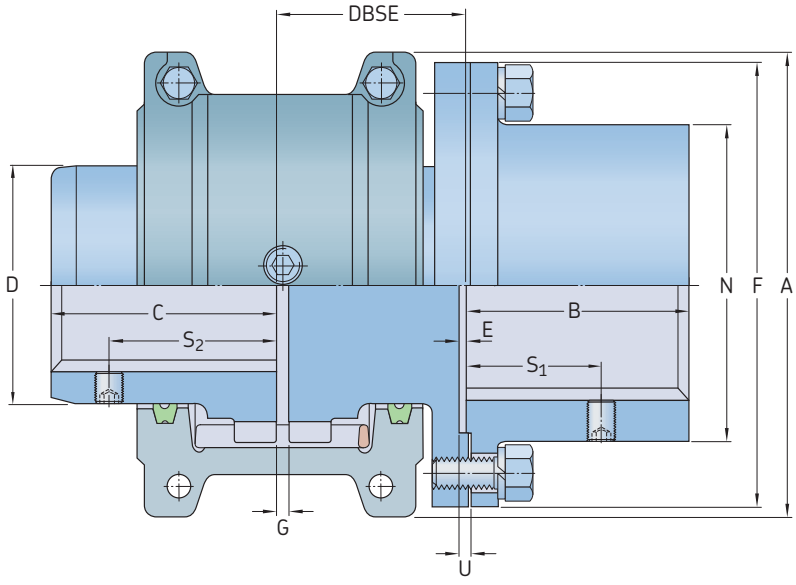

Size	Power per 100 r/min	Rated torque	Speed	Bore diameter			Dimensions									Shaft hub			Gap			Flange bolts	Lubricant weight	Coupling weight without bore
			Max.	Min.	Max.	Shaft hub Max.	A	B	C	D	DBSE Min.	DBSE Max.	N	E	F	S_1	S_2	U	G Min.	G Normal		Qty		
–	kW	Nm	r/min	mm															mm				kg	
1020 TGHS	0,54	52	3 600	12	30	35	101,6	35	47,5	39,7	45	102	52	0,8	86	27,4	39,1	1,8	1,5	3		4	0,027	2,9
1030 TGHS	1,6	149	3 600	12	36	43	110	41	47,5	49,2	45	109	59	0,8	94	31,5	39,1	1,8	1,5	3		8	0,040	3,9
1040 TGHS	2,6	249	3 600	12	44	56	117,5	54	50,8	57,2	45	109	78	0,8	113	27,4	40,1	1,8	1,5	3		8	0,054	5,9
1050 TGHS	4,6	435	3 600	12	50	67	138	60	60,3	66,7	57	109	87	0,8	126	40,6	44,7	1,8	1,5	3		8	0,068	9,1
1060 TGHS	7,2	684	3 600	19	57	80	150,5	73	63,5	76,2	64	166	103	1,8	145	43,2	52,3	2,8	1,5	3		8	0,086	14
1070 TGHS	10,4	994	3 600	19	65	85	161,9	79	76,2	87,3	64	166	109	1,8	153	46,7	53,8	2,8	1,5	3		12	0,113	17,6
1080 TGHS	21,5	2 050	3 600	27	79	95	194	89	88,9	104,8	93	204	122	1,8	178	49,8	64,5	2,8	1,5	3		12	0,172	29
1090 TGHS	39,0	3 730	3 600	27	95	110	213	102	98,4	123,8	93	204	142	1,8	210	56,9	71,6	2,8	1,5	3		12	0,254	42,8
1100 TGHS	65,7	6 280	2 440	41	107	130	250	90	120,6	142,1	103	205	171	1,6	251	–	–	3,2	1,5	5		12	0,426	66
1110 TGHS	97,6	9 320	2 250	41	117	150	270	104	127,0	160,3	106	205	196	1,6	277	–	–	3,2	1,5	5		12	0,508	84,5
1120 TGHS	143,0	13 700	2 025	60	136	170	308	119	149,2	179,4	125	205	225	1,6	319	–	–	4	1,5	6		12	0,735	129
1130 TGHS	208,0	19 900	1 800	66	165	190	346	135	161,9	217,5	130	205	238	1,6	346	–	–	4	1,5	6		12	0,907	179
1140 TGHS	299,0	28 600	1 650	66	184	210	384	152	184,2	254,0	135	205	266	1,6	386	–	–	4	1,5	6		12	1,13	252
1150 TGHS	416,0	39 800	1 500	108	203	270	453,1	173	182,9	269,2	175	187	334	5,1	425	–	–	–	1,5	6		14	1,95	348
1160 TGHS	586,0	55 900	1 350	120	228	290	501,4	186	198,1	304,8	180	205	366	6,6	457	–	–	–	1,5	6		14	2,81	441
1170 TGHS	781,0	74 600	1 225	133	279	340	566,4	220	215,9	355,6	194	224	425	8,4	527	–	–	–	1,5	6		16	3,49	652
1180 TGHS	1 080,0	103 000	1 100	133	311	340	629,9	249	238,8	393,7	202	247	451	5,1	591	–	–	8,1	1,5	6		16	3,76	877
1190 TGHS	1 430,0	137 000	1 050	152	339	380	675,6	276	259,1	436,9	207	267	508	5,1	660	–	–	8,1	1,5	6		18	4,40	1 150
1200 TGHS	1950,0	186 000	900	177	361	400	756,9	305	279,4	497,8	224	289	530	6,1	711	–	–	9,1	1,5	6		18	5,62	1 484

SKF horizontal split cover half spacer couplings are designed to be used where there is no need to accommodate long distances between the shafts. It provides an economical alternative to the full spacer and is an ideal choice for pumps.

SKF Gear Couplings

Very high-torque ratings, along with unparalleled bore capacities, give this coupling a great advantage over other types of couplings. SKF Gear Couplings are rated up to 1 310 kNm with a maximum bore of 525 mm. This is a heavy duty coupling with incredible design flexibility, making it an economical choice for many applications.

The unique design of the gear couplings tooth crowning dramatically reduces backlash and radial clearance. The hub bore capacities are the largest in the industry, allowing for low cost and long service life.

In some applications it is not possible to go up in coupling size to accommodate a specific torque requirement, usually due to dimensional restraints or operating speeds.

For coupling sizes over size 80GC, there are two options for increasing the torque capacity of the SKF Gear Coupling.

1. Heat treatment of the standard carbon steel hubs and cover sets (Type HT). (**Note:** This CANNOT be done retrospectively).
2. The use of alloy steel, heat-treated, to improve capacity by between 35–40% (Type XP).

The correct selection and use of the relevant service factors however, is critical in these series, and should be referred to SKF PTP for full application analysis.

Conversely, higher speeds may also be obtained if the units are dynamically balanced. This should be mandatory over the standard speeds indicated in the tables.

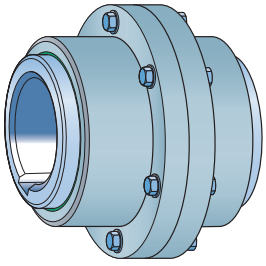

Double engagement → ***page 32***

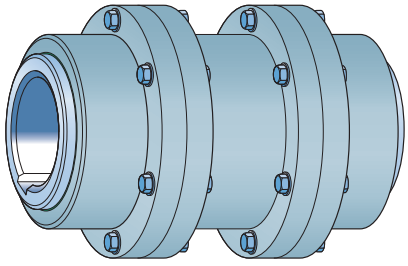

Double engagement spacer → ***page 35***

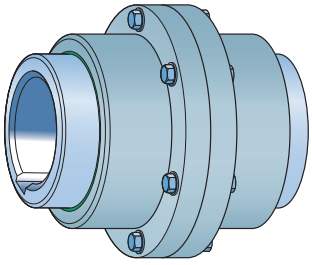

Slide single and double engagement → ***pages 37*** *and* ***38***

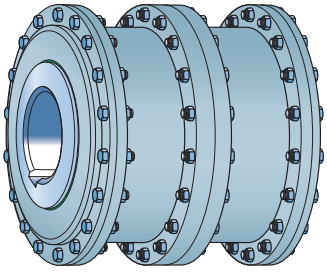

Double engagement → ***page 32***

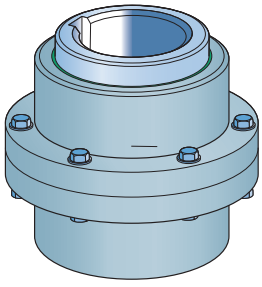

Vertical double engagement → ***page 36***

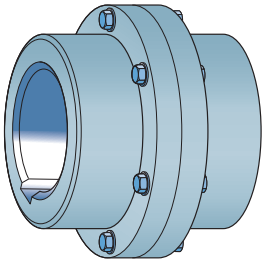

Rigid flanged sleeve → ***page 39***

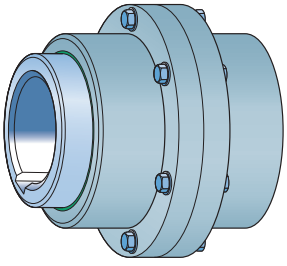

Single engagement → ***page 33***

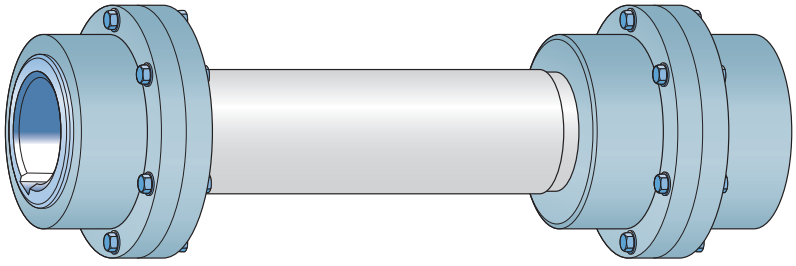

Floating and vertical shaft single engagement → ***pages 43*** *and* ***44***

Gear couplings with taper bushing hub options

In addition to the standard plain bore hub offered with the gear couplings, there is the option of a taper bushing as a machined product.

In such circumstances there must be a re-rating of the coupling capacity, along with possible reduction in the LTB hub width. The capacity limitations are based on the maximum recommended torque for the relevant bushing, with a standard keyway.

The taper bushing is normally mounted from the inner face of the coupling (Type F configuration), sometimes referred to as inboard side). It may also be possible for it to be mounted in the external (H) configuration (or outboard). As the flex halves for the agma compliant couplings may also be interchanged, a combination of 'F' and 'H' hub can also be used where mounting conditions permit (e.g. FF, HH or FH / HF combinations).

The following table may be used as a general guide. It shows which bushing fits where, and defines any required reduction of the LTB hub from the standard (catalogue) length.

Note: As gear couplings traditionally offer the highest torque capacity vs. diameter ratio of any coupling, the range available with a taper bushing hub is limited. It becomes uneconomical to use this system when the derating of the coupling (due to the taper bushing limitation) falls well below the capability of the coupling with standard shaft connections.

Selection

Standard selection method

This selection procedure can be used for most motor, turbine, or engine driven applications. The following information is required to select an SKF gear coupling:

- Torque – Power [kW]
- Speed [r/min]
- Type of equipment and application
- Shaft diameters
- Shaft gaps
- Physical space limitation
- Special bore or finish information

Exceptions to use of the standard selection method are for high peak loads and brake applications. For these, use the formula selection method or contact SKF.

3 Determine system torque
If torque is not given, use the following formula to calculate for torque (T)

System torque [Nm]=

$$\frac{\text{Power [kW]} \times 9\,550}{\text{Speed [r/min]}}$$

4 Service factor
Determine the service factor with **tables 9** and **10** on **pages 87** and **88**.

5 Coupling rating
Determine the required minimum coupling rating as shown below:

Coupling rating =
service factor × torque [Nm]

6 Size
Select the appropriate coupling from the torque column of the product tables on **pages 32** to **40** and **43** to **44**. with a value that is equal to or greater than that determined in **step 3** above and check that the chosen coupling can accommodate both driving and driven shafts.

7 Other considerations
Possible other restrictions might be speed [r/min], bore, gap and dimensions.

Standard selection example

Select a coupling to connect the low speed shaft of an ore conveyor drive to a speed reducer. The 350 kW, 1 440 r/min electric motor is driving the reducer with an output speed of 38 r/min. The reducer low speed shaft diameter is 215 mm, the conveyor head shaft is 225 mm. Shaft extensions are both 280 mm.

1 Determine system torque
System torque [Nm] =

$$\frac{350 \text{ kW} \times 9\,550}{38 \text{ r/min}} = 87\,997 \text{ Nm}$$

2 Service factor
From **table 7** on **page 60** = 1,00

3 Required coupling rating
1,00 × 87 951 Nm = 87 951 Nm

4 Size
From product table on **page 32**, the coupling size 60 is the proper selection based on the torque rating of 90 400 Nm which exceeds the required minimum rating of 87 951 Nm.

5 Other considerations
The speed capacity of 2 450 (coupling size 60) exceeds the required speed of 38 r/min. The maximum bore capacity of 244 mm exceeds the required shaft diameters of 215 mm and 225 mm. The minimum required shaft length (J) of 169 mm is exceeded by the equipment's shaft extensions of 280 mm. The resulting service factor is 1,03.

Formula method

The standard selection method can be used for most coupling selections. However, the formula method should be used for:

- high peak loads
- brake applications (If a brake wheel is to be an integral part of the coupling)

By including the system's peak torque, frequency, duty cycle and brake torque ratings, a more accurate result will be obtained.

1 High peak loads
Use one of the following formulas (A, B, or C) for:

- Motors with higher than normal torque characteristics.
- Applications with intermittent operations shock loading.
- Inertia effects due to frequent stops and starts or repetitive high peak torques.

Peak torque is the maximum torque that can exist in the system. Select a coupling with a torque rating equal to or exceeding the selection torque from the relevant formula below.

A Non-reversing peak torque
Selection torque [Nm] =
System peak torque

or

Selection torque [Nm] =

$$\frac{\text{System peak kW} \times 9\,550}{\text{r/min}}$$

B Reversing high peak torque
Selection torque [Nm] =

$$\frac{1{,}5 \times \text{system peak torque}}{\text{r/min}}$$

C Occasional peak torques (non-reversing)
If a system peak torque occurs less than 1 000 times during the expected coupling life, use the following formula:

Selection torque [Nm] =
0,5 × system peak torque

or

Selection torque [Nm] =

$$\frac{0{,}5 \times \text{system peak kW} \times 9\,550}{\text{r/min}}$$

2 Brake applications
If the torque rating of the brake exceeds the motor torque, use the brake rating as follows:

Selection torque [Nm] =
Brake torque rating × Service factor.

Formula selection example

High peak load
Select a coupling for reversing service to connect a gear drive low speed shaft to a metal forming mill drive. The electric motor rating is 30 kW and the system peak torque estimated to be 9 000 Nm. Coupling speed is 66 r/min at the motor base speed. The drive shaft diameter is 90 mm. The metal forming mill drive shaft diameter is 120 mm.

1 Type
Refer to **pages 8** and **9** and select the appropriate coupling type.

2 Required minimum coupling rating
Use the reversing high peak torque formula in step 1B.

1,5 × 9 000 Nm = 13 500 Nm =
Selection torque

3 Size
From product table on **page 32**, size 35 with a torque rating of 18 500 exceeds the selection torque of 13 500 Nm.

4 Other considerations
Gear coupling size 35 has a maximum bore capacity of 124 mm from product table on **page 32** and the allowable speed of 3 900 r/min exceeds the equipment requirements.

Formula method for brake disc applications
To determine the capacity required for a dynamic brake application:

$$(1a)\ M_{TB} = \frac{kW \times 60 \times 10^3}{2 \times \pi\ r/min} = \times 2{,}0\ [Nm]$$

which may be simplified to:

$$(1b)\ M_{TB} = \frac{kW \times 9\,550}{r/min} = \times 2{,}0\ [Nm]$$

Additionally, where the inertias involved (I) are known or can be determined (by reference to the brake position), and the braking deceleration time, in rads/sec (α) is known, the torque may also be determined from:

$$(1c)\ M_{TB} = I \times \alpha \times 2{,}0\ [Nm]$$

The coupling capacity [MT_{nom}] from the catalogue must be greater than the figures obtained in 1(a), 1(b) or 1(c) above.

$$(2)\ M_{TNOM} \geq MTB\ [Nm]$$

Note: Where the brake is only being used as a holding brake, i.e. the system is brought to a stop by other means, prior to application of the brake, standard coupling selection procedures may be used.

(a) **Gear coupling** (double engagement) with brake disc (schematic only) (→ **fig. 1**).

Note: The brake disc spigot arrangement may vary from that illustrated, depending on size.

The **gear** coupling (double engagement[1)]), is shown in **fig. 1** on **page 26**.

The symmetrical arrangement of the gear coupling allows the hubs to be on either the driveR or driveN (braked) shafts. Subject to the braking torque, the only deviation from standard gear coupling components, is the extended length of the fitted bolts. Some axial allowance is required for maintenance, as the cover need to be removed for inspection.

Note:

a. Brake disc dimensioning

- In general the coupling selection for dynamic braking should be no less than 200% of the running (installation) torque, unless the results of a full analysis of the inertias involved are known, along with the desired stopping time.
- The diameter of the brake disc (D_b), will be determined from the required torque, and the caliper's force at the effective diameter (D_{cal} in **fig. 1** on **page 26**) at which the caliper unit (or units) will engage.
- Multiple calipers, typically no more than two, are generally set 180° apart. The thickness of the disc, and whether plain or ventilated, will also be determined by
  – the inertias Σ I (kgm^2) being retarded, relative to the brake position,
  – the stopping time t_s (in seconds) required

b. Brake disc (general)

- International standards, such as DIN 15435, have tables of recommended diameters and thicknesses (or widths) for both disc and drum (shoe) type brakes. (Many brake-system manufacturers also have their own factory standards).
- Disc material will vary depending on the application, capacity and the amount of energy that is required to be dissipated during engagement. Typically however, they are made of spheroidal graphite (nodular) cast iron (e.g. DIN GGG40, AISI 60-40-18; JIS FCD400).
- Thickness variation overall should be <0,05 mm total, and surface finish ≤0,002 µm.

Engineering data

These maximum operating alignment limits are each based on 3/4° per flex half coupling. Combined values of parallel and angular misalignment should not exceed 3/4°. Type GC slide couplings are limited to 1/4° per flex half.

Do not use single engagement couplings to compensate for parallel offset misalignment.

For additional information about gear couplings, please refer to **tables 1** to **6**.

Gear couplings gap measurement for standard and reversed hubs

In some instances it may be required to extend or shorten, the "G" or gap measurement between the hubs without the spacer option. This is usually done by either reversing both (Type 2), or one (Type 3) of the hubs.

On request, special hub dimensions (Type 4) can also be made to suit, where the hub through length (L_1 or L_2) is to specific requirements.

Table 1 shows the "G" (Gap) dimensions for the various configurations up to size GC70.

Data on the larger size couplings (PHE 80GC and above) is available on request. If hubs are heat-treated or made from alloy 4140 (HT), there is no dimensional variation.

Fig. 1

Gear coupling with disc brake

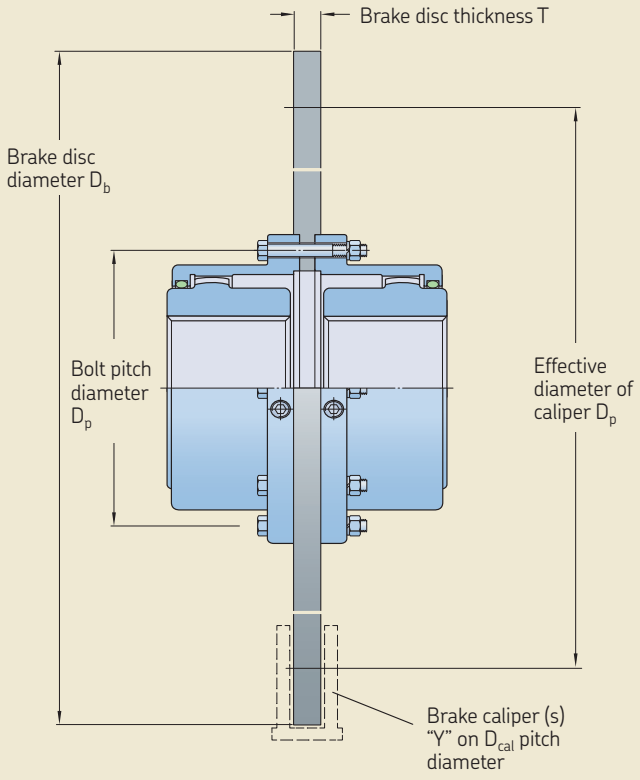

Order data

A complete gear coupling consists of: 2 hubs, 2 covers and 1 assembly kit. Coupling size 80 and above consists of: 2 hubs, 1 male cover, 1 female cover and 1 assembly kit. For more detailed information on ordering specific gear couplings, refer to **table 7** on **page 30**.

Fig. 2

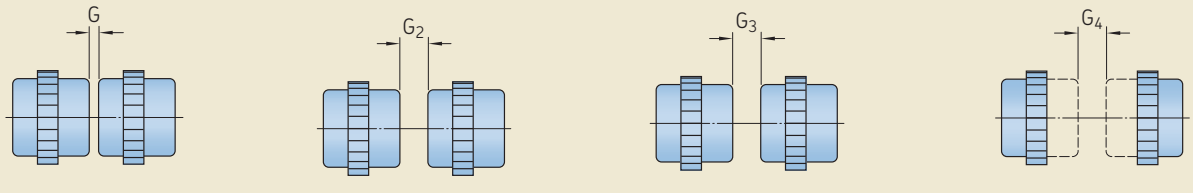

Type 1
Standard hub

Type 2
2 Reversed hubs

Type 3
1 Reversed hub

Type 4
Hub length to customer specification

Table 1

Size	Type 1 Standard hubs		Type 2 2 Reversed hubs		Type 3 1 Standard 1 Reversed	Type 4 Modified hubs	
	C	G	ØD	G_2	G_3	G_4	L_1/ L_2
10 GC	43	3	69	16	8		
15 GC	49	3	86	16	8		
20 GC	62	3	105	10	5		
25 GC	77	5	131	14	7		
30 GC	91	5	152	2	1		
35 GC	106	6	178	10	5		
40 GC	121	6	210	26	13	Hub lengths and subsequent gap dimensions to customer specification.	
45 GC	135	8	235	24	12		
50 GC	153	8	254	52	26		
55 GC	168	8	279	82	41		
60 GC	188	8	305	64	32		
70 GC	221	9,5	343	80	40		
80 GC	249	10	356	– [1]	– [1]		
90 GC	276	13	394	– [1]	– [1]		
100 GC	305	13	445	– [1]	– [1]		
110 GC	333	13	495	– [1]	– [1]		
120 GC	353	13	546	– [1]	– [1]		

[1] Refer to SKF PTP for gap dimensions for these sizes, and above.

Table 2

Misalignment capability

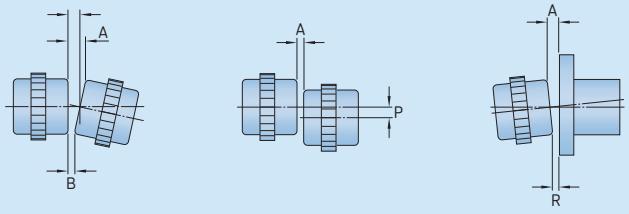

Size	Double engagement Installation maximum Parallel offset (P)	Angular offset (A–B)	Operating maximum Parallel offset (P)	Angular offset (A–B)	Coupling gap Normal gap +/– 10%	Single engagement Installation maximum Angular offset (A–B)	Operating maximum Angular offset (A–B)	Coupling gap Normal gap +/– 10%
–	mm		mm		mm	mm	mm	mm
10	0,05	0,15	0,66	1,8	3	0,15	0,89	4
15	0,08	0,18	0,86	2,26	3	0,18	1,14	4
20	0,08	0,23	1,02	2,74	3	0,23	1,37	4
25	0,10	0,28	1,27	3,43	5	0,28	1,70	5
30	0,13	0,33	1,52	3,99	5	0,33	2,01	5
35	0,15	0,38	1,83	4,65	6	0,38	2,34	6
40	0,18	0,46	2,13	5,49	6	0,46	2,74	7
45	0,20	0,51	2,39	6,15	8	0,51	3,07	8
50	0,23	0,56	2,72	6,65	8	0,56	3,33	9
55	0,28	0,61	3,12	7,32	8	0,61	3,66	9
60	0,28	0,66	3,35	7,98	8	0,66	3,99	10
70	0,33	0,79	3,94	9,32	10	0,79	4,65	13
80	0,41	0,81	2,46	4,83	10	0,81	2,41	13
90	0,43	0,91	2,64	5,49	13	0,91	2,74	14
100	0,48	1,02	2,97	6,15	13	1,02	3,07	16
110	0,56	1,14	3,30	6,81	13	1,14	3,40	16
120	0,58	1,24	3,50	7,49	13	1,24	3,73	16

Table 3

Puller bolt hole data (gear and rigid)

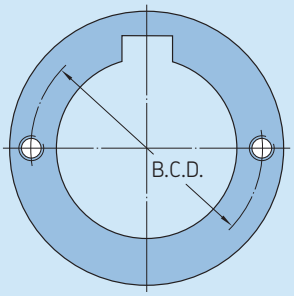

Size Flex hub	Gear B.C.D.[1]	Bolt size	Rigid B.C.D.[1]	Bolt size
–	mm	Tr (ISO)	mm	Tr (ISO)
25	113	M12xP1,75	133	M12xP1,75
30	129	M12xP1,75	156	M12xP1,75
35	152	M12xP1,75	182	M12xP1,75
40	181	M16xP2,0	210	M16xP2,0
45	200	M16xP2,0	233	M16xP2,0
50	216	M20xP2,5	259	M20xP2,5
55	238	M20xP2,5	284	M20xP2,5
60	264	M20xP2,5	316	M20xP2,5
70	311	M24xP3,0	368	M24xP3,0
80	318	M24xP3,0	392	M24xP3,0
90	356	M30xP3,5	438	M30xP3,5
100	394	M36xP4,0	476	M36xP4,0
110	445	M36xP4,0	521	M36xP4,0
120	495	M36xP4,0	575	M36xP4,0
130	533	M36xP4,0	627	M36xP4,0
140	584	M36xP4,0	665	M36xP4,0
150	635	M36xP4,0	719	M36xP4,0
160	686	M36xP4,0	759	M36xP4,0

[1] B.C.D. = Bolt Centre Diameter

Table 4

Typical gear coupling brake rating capacities (M_{TMAX})

SKF Coupling Size (PHE XXGCBD)	Nominal Standard Disc O/Dia. D_b x T	Max. Brake Rating of Coupling M_{TMAX} (Nm)
PHE 10GCBD	Disc diameter D_b and thickness T to customer specification.	250
PHE 15GCBD		569
PHE 20GCBD		1 050
PHE 25GCBD		1 895
PHE 30GCBD		3 115
PHE 35GCBD		4 810
PHE 40GCBD		7 315
PHE 45GCBD		10 025
PHE 50GCBD		13 550
PHE 55GCBD		17 780
PHE 60GCBD		23 030
PHE 70GCBD		33 465

Larger sizes available on request. (Refer SKF_PT-Inquiry)

Table 5

Bolt data flex half

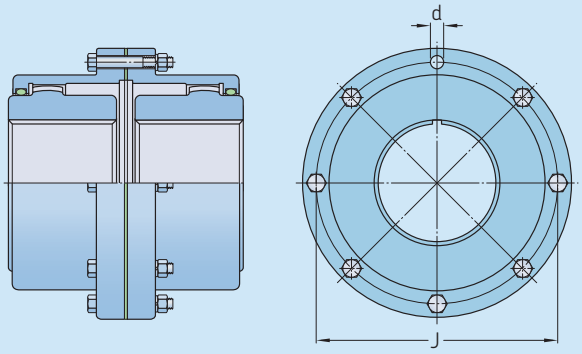

Size	No. of bolts z	Bolt thread[2]	Bolt pitch diameter[1]		Tightening torque Ms	
–	–	in.	mm	in.	Nm	lbf-in.
PHE 10GC	6	$^1/_4$ x $1^1/_2$	95,25	$3^3/_4$	7,1	63
PHE 15GC	8	$^3/_8$ x 2	122,24	$4^{13}/_{16}$	33,8	299
PHE 20GC	6	$^1/_2$ x 2	149,23	$5^7/_8$	59	523
PHE 25GC	6	$^5/_8$ x $2^1/_2$	180,98	$7^1/_8$	146	1 293
PHE 30GC	8	$^5/_8$ x $2^1/_2$	206,38	$8^1/_8$	146	1 293
PHE 35GC	8	$^3/_4$ x $3^1/_4$	241,30	$9^1/_2$	294	2 604
PHE 40GC	8	$^3/_4$ x $3^1/_4$	279,40	11	294	2 604
PHE 45GC	10	$^3/_4$ x $3^1/_4$	304,80	12	294	2 604
PHE 50GC	8	$^7/_8$ x $4^1/_4$	342,90	$13^1/_2$	402	3 560
PHE 55GC	14	$^7/_8$ x $4^1/_4$	368,30	$14^1/_2$	402	3 560
PHE 60GC	14	$^7/_8$ x $3^1/_2$	400,05	$15^3/_4$	402	3 560
PHE 70GC	16	1 x $3^1/_2$	463,55	$18^1/_4$	510	4 517

[1] Bolt pitch diameters are originally based on imperial (inch) dimensions. The metric dimensions may have been rounded.
[2] Bolts are all grade 8,8 (unless otherwise specified) and to factory standard for reamed holes.

Bolt data flex half

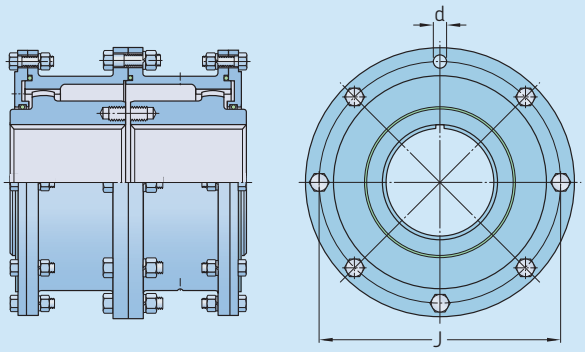

Size	No. of bolts[3]	Centre flange (flex half)					End cover plate (x2)		
	z	Bolt thread[2]	Bolt PCD[1]		Torque Ms		Bolt thread[2]	Torque Ms	
–	–	–	mm	in.	Nm	lbf-in.	–	Nm	lbf-in.
Large size (80GC–160GC)									
PHE 80GC	16	$1^{1}/_{8}$ x $4^{1}/_{8}$	527,05	$20^{3}/_{4}$	745	6 598	$^{7}/_{8}$ x $3^{1}/_{4}$	402	3 560
PHE 90GC	18	$1^{1}/_{4}$ x $4^{3}/_{4}$	590,55	$23^{1}/_{4}$	1 010	8 946	1 x $3^{1}/_{2}$	510	4 517
PHE 100GC	18	$1^{1}/_{4}$ x $5^{1}/_{4}$	641,35	$25^{1}/_{4}$	1 010	8 946	1 x $3^{1}/_{2}$	510	4 517
PHE 110GC	18	$1^{1}/_{2}$ x 6	590,55	$27^{1}/_{2}$	1 765	15 635	1 x $3^{1}/_{2}$	510	4 517
PHE 120GC	18	$1^{1}/_{2}$ x $6^{1}/_{4}$	762,00	30	1 765	15 635	$1^{1}/_{8}$ x $3^{1}/_{2}$	745	6 599
PHE 130GC	18	$1^{1}/_{2}$ x $6^{1}/_{4}$	822,33	$32^{3}/_{8}$	1 765	15 635	$1^{1}/_{8}$ x $3^{1}/_{2}$	1 010	8 945
PHE 140GC	18	$1^{3}/_{4}$ x $6^{1}/_{2}$	876,30	$34^{1}/_{2}$	2 710	24 000	$1^{1}/_{8}$ x $3^{1}/_{2}$	1 010	8 945
PHE 150GC	20	$1^{3}/_{4}$ x $6^{1}/_{2}$	933,45	$36^{3}/_{4}$	2 710	24 000	$1^{1}/_{8}$ x $3^{1}/_{2}$	1 010	8 945
PHE 160GC	20	2 x 7	1 009,65	$39^{3}/_{4}$	4 060	35 960	$1^{1}/_{8}$ x $3^{1}/_{2}$	1 010	8 945

[1] Bolt pitch diameters are originally based on imperial (inch) dimensions. The metric dimensions may have been rounded.
[2] Bolts are all grade 8,8 (unless otherwise specified) and to factory standard for reamed holes.
[3] For sizes 80GC and above, the number of bolts are for both the end covers (2 off) and the centre flange connection.

Table 7

Order data

Coupling type	Hubs	Qty	Cover	Qty	Assembly kit	Qty	Spacer/floating shaft and kits ... = DBSE dimension	Qty	Disc	Qty
Double engagement										
Plain bore	PHE 50GCRSB	2	PHE 50GCCOVER	2	PHE 50GCKIT	1	–	–	–	–
Taper bushing	PHE 50GCTB	As required	PHE 50GCCOVER	2	PHE 50GCKIT	1	–	–	–	–
Size 80 and above	PHE 80GCRSB	2	PHE 80GCMCOVER	1	PHE 80GCKIT	1	–	–	–	–
	–	–	PHE 80GCFCOVER	1	–	–	–	–	–	–
Single engagement	PHE 50GCSERSB	1	PHE 50GCCOVER	1	PHE 50GCKIT	1	–	–	–	–
	PHE 50GCRSB	1	–	–	–	–	–	–	–	–
Taper bushing	PHE 50GCTB	1	–	–	–	–	–	–	–	–
Size 80 and above	PHE 80GCSERSB	1	–	1	PHE 80GCKIT	1	–	–	–	–
	PHE 80GCRSB	1	PHE 80GCFCOVER	1	–	–	–	–	–	–
Double engagement spacer	PHE 50GCRSB	2	PHE 50GCCOVER	2	PHE 50GCKIT	2	PHE 50GCSPACER ... MM	1	–	–
Taper bushing	PHE 50GCTB	As required	PHE 50GCCOVER	2	PHE 50GCKIT	2	PHE 50GCSPACER ... MM	1	–	–
Double engagement slide type 1, 2, 3										
Type 1	PHE 50GCSLT1RSB	2	PHE 50GCST1COVER	2	PHE 50GCKIT	1	PHE 50GCCPLATE	1	–	–
Type 2	PHE 50GCSLT2RSB	2	PHE 50GCST2COVER	2	PHE 50GCKIT	1	PHE 50GCCPLATE	1	–	–
Type 3	PHE 50GSCLT3RSB	2	PHE 50GCST3COVER	2	PHE 50GCKIT	1	PHE 50GCCPLATE	1	–	–
							PHE 50GCT3DISC	2	–	–
Single engagement slide type 2 and 3										
Type 2	PHE 50GCSLT2RSB	1	PHE 50GCSLT2COVER	1	PHE 50GCKIT	1	–	–	–	–
	PHE 50GCSERSB	1	–	–	–	–	–	–	–	–
Type 3	PHE 50GCSLT3RSB	1	PHE 50GCSLT3COVER	1	PHE 50GCKIT	1	–	–	–	–
	PHE 50GCSERSB	1	–	–	–	–	–	–	–	–
Single engagement floating shaft	PHE 50GCSERSB	2	PHE 50GCCOVER	2	PHE 50GCKIT	2	PHE 50GCFSHAFT ... MM	1	–	–
	PHE 50GCRSB	2	–	–	–	–	PHE 50GCDISCKIT	2	–	–
Double engagement vertical	PHE 50GCVRSB	2	PHE 50GCVCOVER	2	PHE 50GCKIT	1	50GCVCTRKIT	1	–	–
Single engagement vertical	PHE 50GCVRSB	1	PHE 50GCVCOVER	1	PHE 50GCKIT	1	50GCVCTRKIT	–	–	–
	PHE 50GCSERSB	1	–	–	–	–	–	–	–	–
Single engagement vertical floating	PHE 50GCVRSB	1	PHE 50GCVCOVER	1	PHE 50GCKIT	1	50GCVCTRKIT	2	–	–
	PHE 50GCFSERSB	1	–	–	–	–	–	–	–	–
	PHE 50GCVRSB	1	PHE 50GCVCOVER	1	PHE 50GCKIT	1	PHE 50GCFSHAFT ... MM	1	–	–
	PHE 50GCSERSB	1	–	–	–	–	–	–	–	–
Rigid flanged sleeve	PHE 50GCRRSB	2	–	–	PHE 50GCRKIT	1	–	–	–	–
Taper bushing	PHE 50GFTB	As required	–	–	PHE 80GCRKIT	1	PHE 80GCRRING	1	–	–
Size 80 and above	PHE 80GCRRSB	2	–	–	PHE 80GCRKIT	1	PHE 80GCRRING	1	–	–
Brake capability option[1)]	PHE 50GCX...MM	2	PHE 50GCCOVER	2	PHE 50GCDKIT	1	–	–	PHE 50GCDISC...MM	1
	PHE 50GCRSB	2	PHE 50GCCOVER	2	PHE 50GCDKIT	1	–	–	PHE 50GCDISC...MM	1

[1)] The limitations in the couplings' torque capacity, when fitted with a taper bushing, is based on the maximum recommended torque for the relevant taper bushing with a standard keyway.
For this reason it is uneconomical, but not unfeasable, to offer larger size couplings with taper bushing options.
For bored to size designations, add bore size in mm. For example: PHE 50GCX500MM.
For shrouded bolt covers use cover number, e.g. PHE 50SGCCOVER and PHE 50SGCKIT for the assembly kit.
The assembly kit includes oil seals, gasket, bolts and lock-nuts.

Installation

The performance of the coupling depends largely upon how it is installed, aligned and maintained.

1 Mount the flanged sleeves with the seal rings before the hubs

Clean all metal parts using non-flammable solvent and check hubs, shafts and keyways for burrs and remove if necessary. Lightly coat the seals with grease and place well back on the shafts before mounting the hubs. Optionally both shafts can be lubricated with light oil or anti-seize compound. Mount the hubs on their respective shafts so that each hub face is flush with the end of the shaft unless otherwise indicated (→ **fig. 1**).

2 Gap and angular alignment

Use a feeler gauge equal in thickness to the gap specified in **table 2** on **page 27**. Insert the gauge as shown in image (→ **fig. 2**) to the same depth at 90° intervals and measure the clearance between the gauge and hub face. The difference in the minimum and the maximum measurements must not exceed the angular limits specified in **table 2** on **page 27**.

3 Offset alignment

Align the two hubs so that a straight edge rests squarely on both hubs as in image (→ **fig. 3**), and also at 90° intervals. The clearance must not exceed the parallel offset installation limits specified in **table 2** on **page 27**. Tighten all foundation bolts (→ **fig. 4**) and repeat steps 2 and 3. Realign the coupling if necessary.

4 Pack with grease and assemble the sleeves

Pack the gears of the hubs with grease. Insert the gasket between the sleeves and position the sleeves with the lubrication holes approximately 90° apart. Then push the sleeves into position and using the supplied fasteners, bolt the sleeves together. Once the coupling is assembled, remove the lubrication plugs from the sleeves. Insert a grease fitting in one of the holes and pump grease into the sleeve until it is forced out of the opposite lubrication holes (→ **fig. 5**). Replace the lubrication plugs. The installation is complete.

Fig. 1



Fig. 2

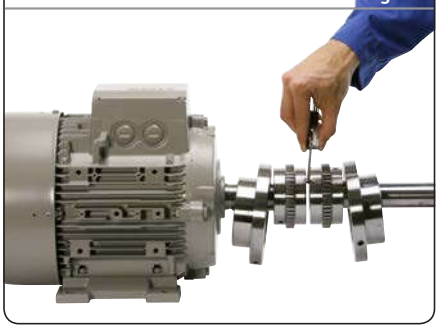

Fig. 3

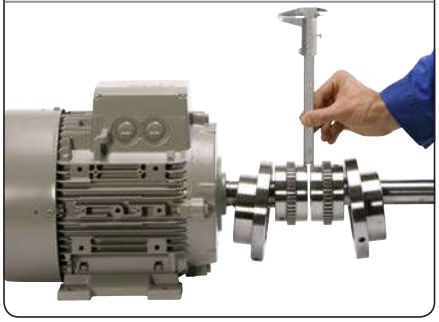

Fig. 4

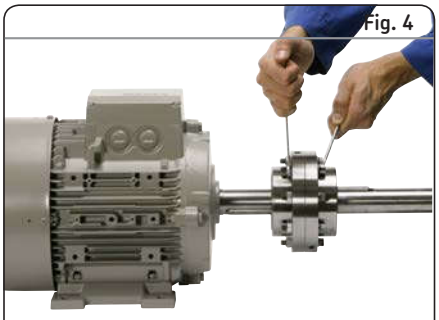

Fig. 5

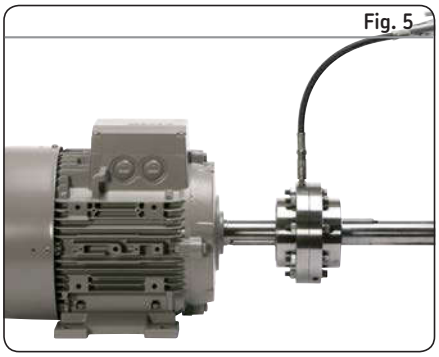

Double engagement

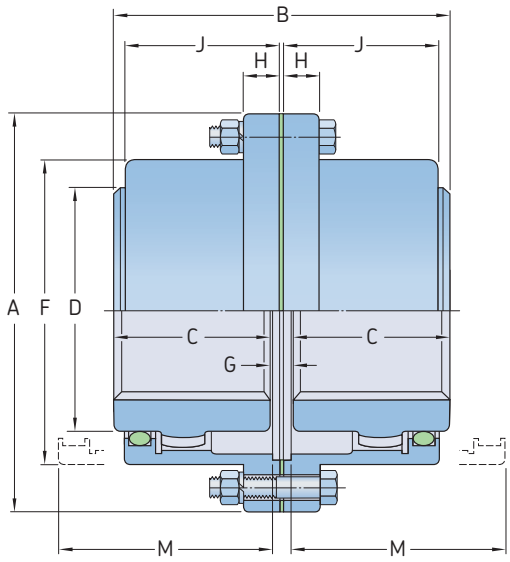

Size 10 to 70

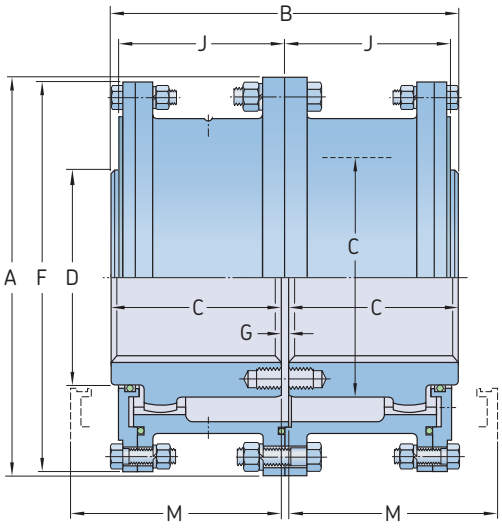

Size 80 to 160

Size	Power per 100 r/min	Rated torque	Speed	Bore diameter		Dimensions								Gap	Lubricant weight	Coupling weight without bore
						A	B	C	D	F	H	J	M[1]	G		
			Max.	Min.	Max.									Min.		
–	kW	Nm	r/min	mm										mm	kg	
10 GC	11,9	1 139	8 000	13	50	116	89	43	69	84	14	39	51	3	0,04	5
15 GC	24,6	2 350	6 500	20	65	152	101	49	86	105	19	48	61	3	0,07	9
20 GC	44,7	4 270	5 600	26	78	178	127	62	105	126	19	59	77	3	0,12	16
25 GC	78,3	7 474	5 000	32	98	213	159	77	131	155	21,8	72	92	5	0,23	29
30 GC	127	12 100	4 400	38	111	240	187	91	152	180	21,8	84	107	5	0,36	43
35 GC	194	18 500	3 900	51	134	279	218	106	178	211	28,4	98	130	6	0,54	68
40 GC	321	30 609	3 600	64	160	318	248	121	210	245	28,4	111	145	6	0,91	97
45 GC	440	42 000	3 200	77	183	346	278	135	235	274	28,4	123	166	8	1,04	136
50 GC	593	56 600	2 900	89	200	389	314	153	254	306	38,1	141	183	8	1,77	190
55 GC	775	74 030	2 650	102	220	425	344	168	279	334	38,1	158	204	8	2,22	249
60 GC	947	90 400	2 450	115	244	457	384	188	305	366	25,4	169	229	8	3,18	306
70 GC	1 420	135 000	2 150	127	289	527	452	221	343	425	28,4	196	267	10	4,35	485
80 GC	1 780	170 000	1 750	102	266	591	508	249	356	572	–	243	300	10	9,53	703
90 GC	2 360	226 000	1 550	115	290	660	565	276	394	641	–	265	327	13	12,25	984
100 GC	3 250	310 000	1 450	127	320	711	623	305	445	699	–	294	356	13	14,97	1 302
110 GC	4 320	413 000	1 330	140	373	775	679	333	495	749	–	322	384	13	17,69	1 678
120 GC	5 810	555 000	1 200	153	400	838	719	353	546	826	–	341	403	13	20,87	2 114
130GC	7 528	719 000	1 075	165	440	911	762	371	584	886	32,65	367	435	19	32,65	2 595
140GC	9 539	911 000	920	175	460	966	806	393	635	940	33,11	378	457	19	33,10	3 107
150GC	11 518	1 100 000	770	190	490	1 029	857	419	686	1 003	40,82	408	483	19	40,81	3 765
160GC	13 715	1 310 000	650	250	525	1 111	908	441	736	1 086	43,08	419	502	25	43,08	4 708

[1] Minimum clearance required for aligning coupling.
Double engagement couplings are designed for most horizontal, close coupled applications. This coupling accommodates both offset and angular misalignment, as well as end float.
Applications include: fans, pumps, steel and paper mill drives, cranes and conveyors.
Bore tolerances will be K7 and key width (b) will be P9 (close fit) for coupling sizes 130 and bigger unless stated otherwise.
Weights are given, in kg, with minimum listed bore, excluding lubricant.

Single engagement

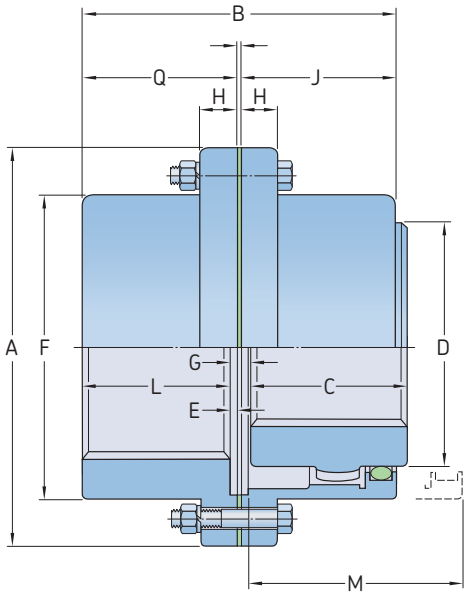

Size 10 to 70

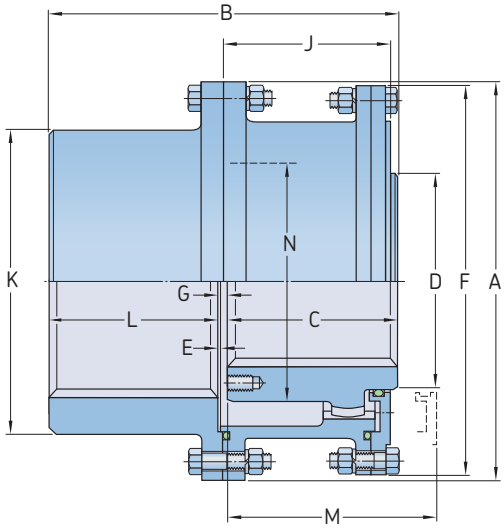

Size 80 to 120

Size	Power per 100 r/min	Rated torque	Speed	Bore diameter Flex hub	Bore diameter Se hub		Dimensions												Gap	Lubricant weight	Coupling weight without bore
							A	B	C	D	E	F	H	J	K[1]	L	M[2]	Q			
			Max.	Max.	Max.	Min.													Min.		
–	kW	Nm	r/min	mm															mm	kg	
10 GCSE	11,9	1 139	8 000	48	60	13	116	87	43	69	2,5	84	14	39	–	40	51	42	4	0,02	4,5
15 GCSE	24,6	2 350	6 500	60	75	19	152	99	49	86	2,5	105	19	48	–	46	61	49	4	0,04	9,1
20 GCSE	44,7	4 270	5 600	73	92	25	178	124	62	105	2,5	126	19	59	–	58	77	61	4	0,07	15,9
25 GCSE	78,3	7 474	5 000	92	111	32	213	156	77	131	2,5	155	21,8	72	–	74	92	76	5	0,12	27,2
30 GCSE	127	12 100	4 400	105	130	38	240	184	91	152	2,5	180	21,8	84	–	88	107	90	5	0,18	43,1
35 GCSE	194	18 500	3 900	124	149	51	279	213,5	106	178	2,5	211	28,4	98	–	102	130	105	6	0,27	61,2
40 GCSE	321	30 609	3 600	146	171	64	318	243	121	210	4,1	245	28,4	111	–	115	145	119	7	0,47	99,8
45 GCSE	440	42 000	3 200	165	194	76	346	274	135	235	4,1	274	28,4	123	–	131	166	135	8	0,57	136,1
50 GCSE	593	56 600	2 900	178	222	89	389	309	153	254	5,1	306	38,1	141	–	147	183	152	9	0,91	195,0
55 GCSE	775	74 030	2 650	197	248	102	425	350	168	279	5,1	334	38,1	158	–	173	204	178	9	1,13	263,1
60 GCSE	947	90 400	2 450	222	267	114	457	384	188	305	6,6	366	25,4	169	–	186	229	193	10	1,70	324,3
70 GCSE	1 420	135 000	2 150	254	305	127	527	454	221	343	8,4	425	28,4	196	–	220	267	229	13	2,27	508
80 GCSE	1 780	170 000	1 750	279	343	102	591	511	249	356	–	572	–	243	450,8	249	300	–	13	4,99	698,5
90 GCSE	2 360	226 000	1 550	305	381	114	660	566	276	394	–	641	–	265	508,0	276	327	–	14	6,35	984,3
100 GCSE	3 250	310 000	1 450	343	406	127	711	626	305	445	–	699	–	294	530,4	305	356	–	16	7,71	1 251,9
110 GCSE	4 320	413 000	1 330	387	445	140	775	682	333	495	–	749	–	322	584,2	333	384	–	16	9,07	1 637,5
120 GCSE	5 810	555 000	1 200	425	495	152	838	722	353	546	–	826	–	341	647,7	353	403	–	16	10,89	2 077,5

[1] May be an “as cast” version depending on coupling size and bore.
[2] Minimum clearance required for aligning coupling.
These single engagement couplings are not designed for floating shaft applications and only accommodate angular misalignment.
For floating shaft applications, please, refer to **page 32** and **33**.

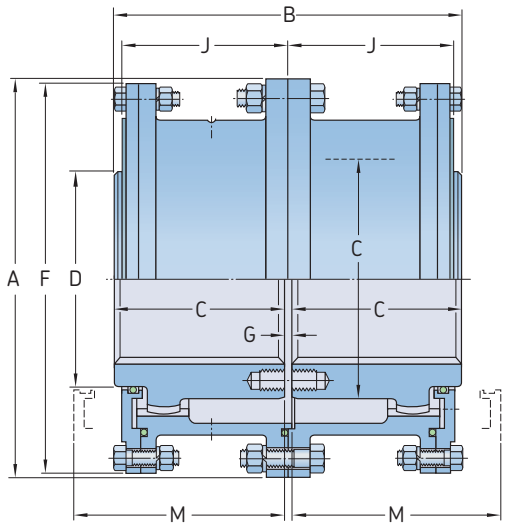

Size 80 to 160

Size	Rated torque[1] Standard Material: C45	Heat treated (HT) Material: C45 HT	Alloy (XT) Material: 4140 HT	Speed	Bore diameter[2]		Coupling weight without bore
				Max.	Min.	Max.	
–	kNm			r/min	mm		kg
80 GC	170	203,8	233,7	1 750	101	266	703
90 GC	226	271,2	315	1 550	114	290	984
100 GC	310	372	442,4	1 450	127	320	1 302
110 GC	413	495,6	608,9	1 330	139	373	1 678
120 GC	555	666	776,7	1 200	152	400	2 114
130 GC	719	862,1	924,6	1 075	165	440	2 595
140 GC	911	1 092,5	1 138	920	175	460	3 107
150 GC	1 100	1 320	1 351	770	190	490	3 765
160 GC	1 310	1 570	1 635	650	250	525	4 708

[1] The figures for the HT and XP are indicative only.
Applications for the HT and XP series couplings should be referred to SKF PTP for confirmation of both capacity and suitability for the specific application.
[2] Bore tolerances will be K7 unless stated otherwise. Key width (b) tolerance will be P9 (close fit). The maximum bores listed are for standard keyways to DIN6883/1 (up to and including 500 mm only). Above 500 mm bore, keyway dimensions MUST be specified as not covered by international standards. Shallow keys, when required, will be to DIN6885/3.
[3] Weights are given in kg, with the minimum listed bore, and excluding lubricant.

Double engagement
Spacer

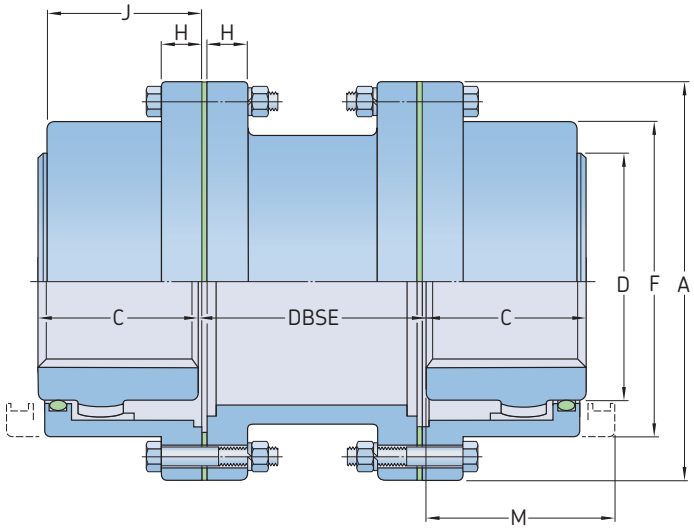

Size	Power per 100 r/min	Rated torque	Speed	DBSE		Bore diameter		Dimensions							Lubricant weight	Coupling weight without bore and min. DBSE
								A	C	D	F	H	J	M[1]		
			Max.	Min.	Max.	Min.	Max.									
–	kW	Nm	r/min	mm											kg	
10 GCS	11,9	1 139	7 000	83	311	13	48	116	43	69	84	14	39	51	0,04	6,8
15 GCS	24,6	2 350	5 500	83	311	19	60	152	49	86	105	19	48	61	0,07	13,6
20 GCS	44,7	4 270	4 600	83	311	25	73	178	62	105	126	19	59	77	0,12	20,4
25 GCS	78,3	7 474	4 000	95	311	32	92	213	77	131	155	21,8	72	92	0,23	38,6
30 GCS	127	12 100	3 600	95	311	38	105	240	91	152	180	21,8	84	107	0,36	54,4
35 GCS	194	18 500	3 100	120	311	51	124	279	106	178	211	28,4	98	130	0,54	88,5
40 GCS	321	30 609	2 800	120	311	64	146	318	121	210	245	28,4	111	145	0,91	122,5
45 GCS	440	42 000	2 600	120	311	76	165	346	135	235	274	28,4	123	166	1,04	165,6
50 GCS	593	56 600	2 400	146	311	89	178	389	153	254	306	38,1	141	183	1,77	238,1
55 GCS	775	74 030	2 200	146	311	102	197	425	168	279	334	38,1	158	204	2,22	306,2
60 GCS	947	90 400	2 100	146	311	114	222	457	188	305	366	25,4	169	229	3,18	358,3
70 GCS	1 420	135 000	1 800	146	311	127	254	527	221	343	425	28,4	196	267	4,35	562,5

[1] Minimum clearance required for aligning coupling.
Double engagement spacer couplings are designed for pump and compressor applications.
The coupling consists of a standard double engagement coupling and a spacer tube which is available in various lengths.

Double engagement
Vertical

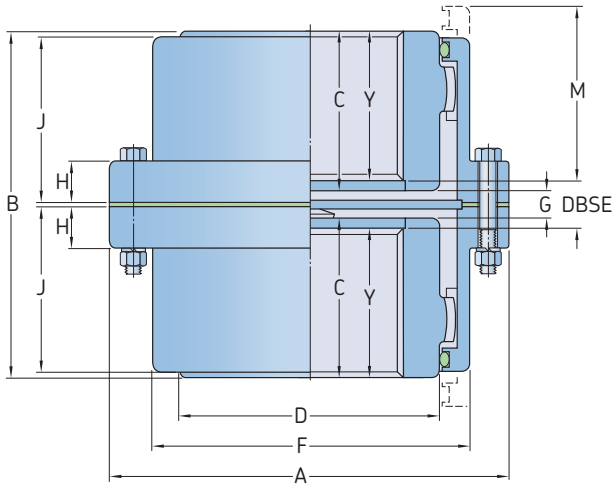

Size	Power per 100 r/min	Rated torque	Speed	Bore diameter		Dimensions										Gap	Lubricant weight	Coupling weight without bore
						A	B	C	D	F	H	J	M[1]	Y	DBSE	G		
			Max.	Max.	Min.											Min.		
–	kW	Nm	r/min	mm												mm	kg	
10 GCV	11,9	1 139	8 000	13	48	116	89	43	69	84	14	39	51	32,5	24	11	0,04	5
15 GCV	24,6	2 350	6 500	19	60	152	101	49	86	105	19	48	61	38,6	24	11	0,07	9
20 GCV	44,7	4 270	5 600	25	73	178	127	62	105	126	19	59	77	51,3	24	11	0,12	16
25 GCV	78,3	7 474	5 000	32	92	213	159	77	131	155	21,8	72	92	65,3	26	14	0,23	29
30 GCV	127	12 100	4 400	38	105	240	187	91	152	180	21,8	84	107	79,8	26	14	0,36	43
35 GCV	194	18 500	3 900	51	124	279	218	106	178	211	28,4	98	130	94,0	30	18	0,54	68
40 GCV	321	30 609	3 600	64	146	318	248	121	210	245	28,4	111	145	105,9	35	22	0,91	97
45 GCV	440	42 000	3 200	76	165	346	278	135	235	274	28,4	123	166	116,3	44	25	1,04	136
50 GCV	593	56 600	2 900	89	178	389	314	153	254	306	38,1	141	183	134,6	44	25	1,77	190
55 GCV	775	74 030	2 650	102	197	425	344	168	279	334	38,1	158	204	149,6	44	25	2,22	249
60 GCV	947	90 400	2 450	114	222	457	384	188	305	366	25,4	169	229	168,1	48	29	3,18	306
70 GCV	1 420	135 000	2 150	127	254	527	452	221	343	425	28,4	196	267	194,8	61	35	4,35	485

[1] Minimum clearance required for aligning coupling.

Double engagement
Slide

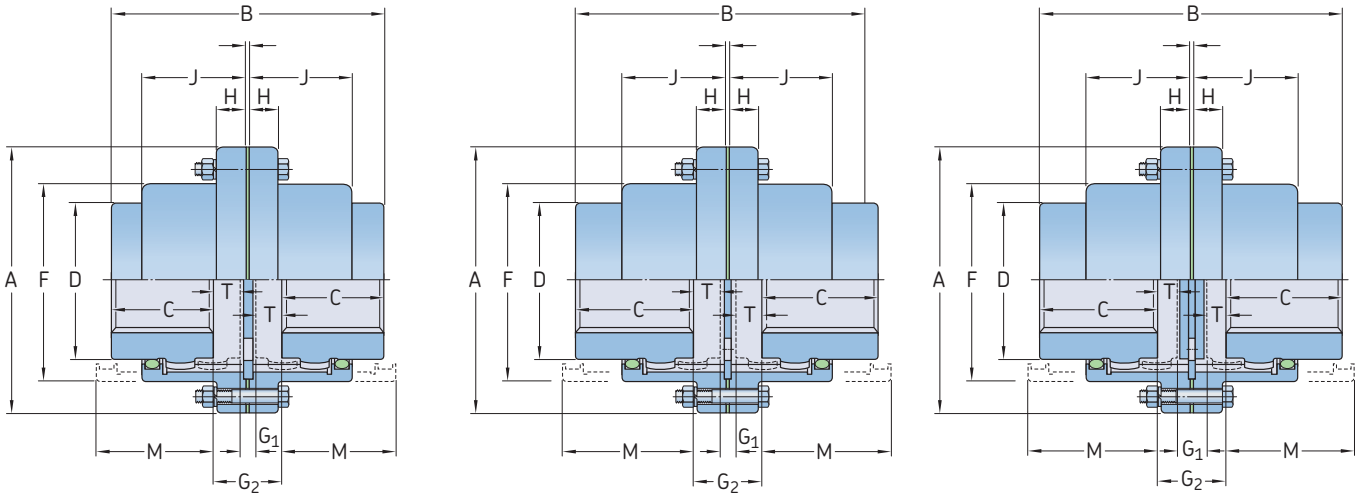

Type 1 Type 2 Type 3

Size	Power per 100 r/min	Rated torque	Speed	Bore diameter		Dimensions						Lubricant weight	Coupling weight without bore
						A	C	D	F	H	J		
			Max.	Min.	Max.								
–	kW	Nm	r/min	mm								kg	
10 GCSL	11,9	1 139	5 300	13	48	116	43	69	84	14	39	0,02	5
15 GCSL	24,6	2 350	4 300	19	60	152	49	86	105	19	48	0,04	9
20 GCSL	44,7	4 270	3 700	25	73	178	62	105	126	19	59	0,06	16
25 GCSL	78,3	7 474	3 300	32	92	213	77	131	155	21,8	72	0,11	29
30 GCSL	127	12 100	2 900	38	105	240	91	152	180	21,8	84	0,18	43
35 GCSL	194	18 500	2 600	51	124	279	106	178	211	28,4	98	0,27	68
40 GCSL	321	30 609	2 400	64	146	318	121	210	245	28,4	111	0,45	97
45 GCSL	440	42 000	2 100	76	165	346	135	235	274	28,4	123	0,51	136
50 GCSL	593	56 600	1 900	89	178	389	153	254	306	38,1	141	0,91	190
55 GCSL	775	74 030	1 800	102	197	425	168	279	334	38,1	158	1,13	249
60 GCSL	947	90 400	1 600	114	222	457	188	305	366	25,4	169	1,19	306
70 GCSL	1 420	135 000	1 400	127	254	527	221	343	425	28,4	196	2,18	485

Size	Type 1						Type 2						Type 3					
	B	M[1]	T		Gap G_1	G_2	B	M[1]	T		Gap G_1	G_2	B	M[1]	T		Gap G_1	G_2
	Max.		Half Max.	Total			Max.		Half Max.	Total			Max.		Half Max.	Total		
–	mm						mm						mm					
10 GCSL	96	54	13	26	8	10	126	58	16	32	8	40	96	54	2	4	6	10
15 GCSL	127	60	10	20	8	29	152	69	23	46	8	54	127	60	7,5	15	14	29
20 GCSL	151	77	9	18	8	27	186	84	27	54	8	62	151	77	10	20	7	27
25 GCSL	188	93	12	24	9	34	231	102	34	68	9	78	188	93	6	12	21	34
30 GCSL	227	108	18	36	9	45	263	118	36	72	9	81	227	108	11,5	23	22	45
35 GCSL	274	124	25	50	11	61	313	135	45	90	11	102	274	124	14	28	33	61
40 GCSL	320	138	32	64	15	79	364	155	54	108	15	121	320	138	16	32	47	79
45 GCSL	355	154	35	70	16	86	406	163	60	120	16	136	355	154	19	38	47	86
50 GCSL	408	175	42	82	18	102	460	189	68	136	18	153	408	175	20,5	41	61	102
55 GCSL	470	191	58	116	18	134	510	221	78	156	18	174	470	191	21	42	92	134
60 GCSL	504	212	53	424	21	127	563	227	83	166	21	187	504	212	24,5	49	78	127
70 GCSL	592	245	62	490	26	150	669	235	99	198	26	223	592	245	27	54	96	150

[1] Minimum clearance required for aligning coupling.
Larger sizes available: contact SKF for details.
Double engagement slide couplings are designed for horizontal close coupled applications and are designed to accommodate thermal expansion of the shaft and large mechanical vibratory screens.
These couplings are available with 3 different ranges of axial capabilities.

Single engagement

Slide

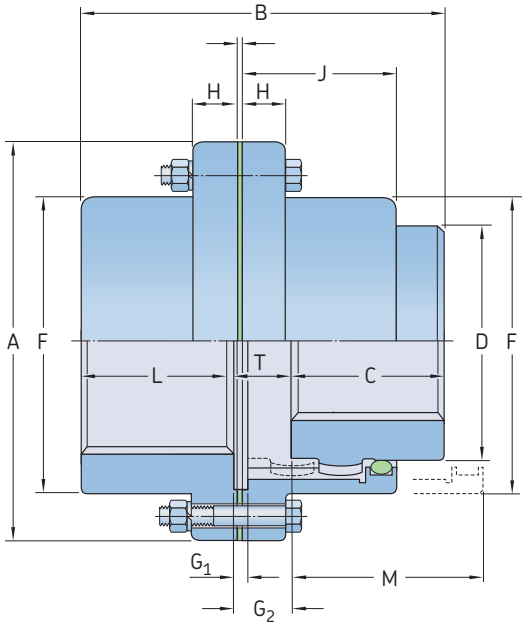

Type 1

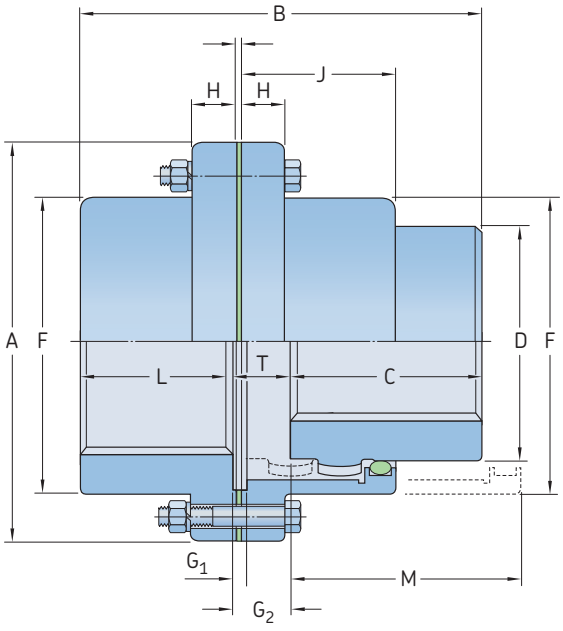

Type 2

Size	Power per 100 r/min	Rated torque	Speed	Bore diameter Flex hub	Bore diameter Se hub		Dimensions A	C	D	F	H	J	L	Lubricant weight	Coupling weight without bore
			Max.	Max.	Max.	Min.									
–	kW	Nm	r/min	mm										kg	
10 GCSL	11,9	1 139	5 300	48	60	13	116	43	69	84	14	39	40	0,01	5
15 GCSL	24,6	2 350	4 300	60	75	19	152	49	86	105	19	48	46	0,02	9
20 GCSL	44,7	4 270	3 700	73	92	25	178	62	105	126	19	59	58	0,04	16
25 GCSL	78,3	7 474	3 300	92	111	32	213	77	131	155	21,8	72	74	0,06	29
30 GCSL	127	12 100	2 900	105	130	38	240	91	152	180	21,8	84	88	0,11	43
35 GCSL	194	18 500	2 600	124	149	51	279	106	178	211	28,4	98	102	0,18	68
40 GCSL	321	30 609	2 400	146	171	64	318	121	210	245	28,4	111	115	0,27	97
45 GCSL	440	42 000	2 100	165	194	76	346	135	235	274	28,4	123	131	0,34	136
50 GCSL	593	56 600	1 900	178	222	89	389	153	254	306	38,1	141	147	0,54	195
55 GCSL	775	74 030	1 800	197	248	102	425	168	279	334	38,1	158	173	0,73	263
60 GCSL	947	90 400	1 600	222	267	114	457	188	305	366	25,4	169	186	0,96	324
70 GCSL	1 420	135 000	1 400	254	305	127	527	221	343	425	28,4	196	220	1,36	510

Size	Type 1					Type 2				
	B	M[1]	T	Gap G_1	G_2	B	M[1]	T	Gap G_1	G_2
	Max.		Max.			Max.		Max.		
–	mm					mm				
10 GCSL	90	54	3,6	4	8	105	58	18,5	4	23
15 GCSL	112	60	12,7	4	17	125	69	25,4	4	30
20 GCSL	136	77	11,7	4	16	154	84	29,5	4	34
25 GCSL	170	93	14,5	5	19	192	102	36,3	5	41
30 GCSL	204	108	20,1	5	25	222	118	38,1	5	43
35 GCSL	241	124	27,2	6	33	262	135	47,8	6	53
40 GCSL	279	138	36,3	7	43	300	155	57,4	7	65
45 GCSL	315	154	38,9	8	47	338	163	64	8	72
50 GCSL	356	175	47	9	56	382	189	72,6	9	81
55 GCSL	412,5	191	63	9	72	433	221	83,1	9	92
60 GCSL	445	212	59,7	10	70	475	227	89,4	10	100
70 GCSL	524	245	70,4	13	83	560	235	106,7	13	119

[1] Minimum clearance required for aligning coupling.
Larger sizes available: contact SKF for details.
These couplings are available with 2 different ranges of axial capabilities.

Rigid flanged sleeve

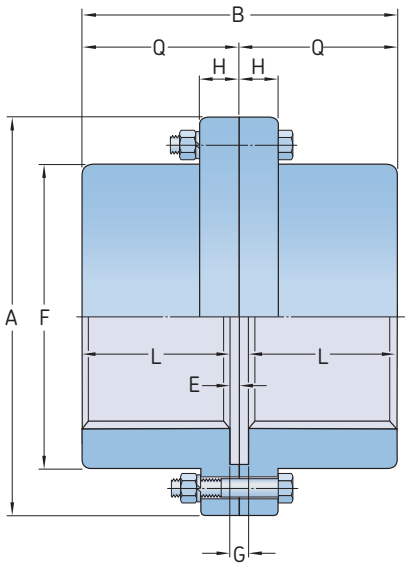

Size	Power per 100 r/min	Rated torque	Speed	Bore diameter		Dimensions							Gap	Coupling weight without bore
			Max.	Min.	Max.	A	B	E	F	H	L	Q	G Min.	
–	kW	Nm	r/min	mm									mm	kg
10 GCR	11,9	1 139	8 000	13	60	116	84,5	2,5	84	14	40	39	5	5
15 GCR	24,6	2 350	6 500	19	75	152	97,5	2,5	105	19	46	48	5	9
20 GCR	44,7	4 270	5 600	25	92	178	122	2,5	126	19	58,5	59	5	16
25 GCR	78,3	7 474	5 000	32	111	213	152,5	2,5	155	21,8	73,5	72	5	28
30 GCR	127	12 100	4 400	38	130	240	181	2,5	180	21,8	88	84	5	43
35 GCR	194	18 500	3 900	51	149	279	209	2,5	211	28,4	102	98	5	68
40 GCR	321	30 609	3 600	64	171	318	239	4,1	245	28,4	115	111	8	102
45 GCR	440	42 000	3 200	76	194	346	269	4,1	274	28,4	130,5	123	8	140
50 GCR	593	56 600	2 900	89	222	389	305	5,1	306	38,1	147,5	141	10	205
55 GCR	775	74 030	2 650	102	248	425	355,5	5,1	334	38,1	172,5	158	10	280
60 GCR	947	90 400	2 450	114	267	457	386	6,6	366	25,4	186,5	169	13	335
70 GCR	1 420	135 000	2 150	127	305	527	457	8,4	425	28,4	220	196	17	536
80 GCR	1 780	170 000	1 750	102	343	591	514	8	572	31,5	249	243	16	703
90 GCR	2 360	226 000	1 550	114	381	660	568	8	641	38	276	265	16	984
100 GCR	3 250	310 000	1 450	127	406	711	629	9,7	699	44,2	305	294	19	1 210
110 GCR	4 320	413 000	1 330	140	445	775	686	9,7	749	50,8	333	322	19	1 610
120 GCR	5 810	555 000	1 200	152	495	838	724	9,7	826	53,8	353	341	19	2 114

Rigid flanged sleeve couplings are designed for horizontal, close coupled applications. These are excellent high torque couplings to use where there is no need to accommodate misalignment.

Gear couplings with taper bushing option

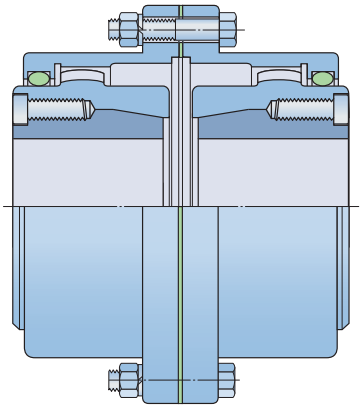

Gear coupling mounting
in modified hubs

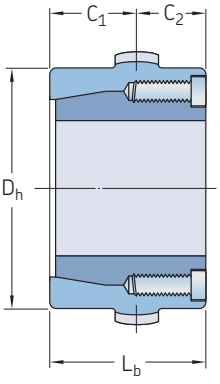

Type “F” mounting
$C_1 > C_2$
(standard configuration)

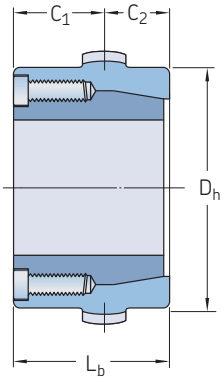

Type “H” mounting
$C_1 > C_2$
(non-preferred, not
available in all series)

Size	Taper bushing designation	Bushing torque capacity	Bore diameter range[1]		Nominal hub length	Hub diameter
			Min.	Max.	Lb	D_h
–	–	Nm	mm		mm	mm
10 GCTB	1215	405	13	32	43	69
15 GCTB	1615	485	13	42	53	88
20 GCTB	2012	810	13	50	62	105
25 GCTB	2525	1 275	25	65	77	131
30 GCTB	3030	2 710	24	80	91	152
35 GCTB	3535	5 060	32	91	107	178
40 GCTB	4040	8 727	37	103	121	210

[1] The taper bushing combination may be used in full flex-flex or flex-rigid configuration.
Check rigid hub dimensions on **page 37**.

Floating shaft gear couplings

The SKF floating shaft coupling consists of two standard single engagement couplings, two gap discs and a connector shaft.

A floating shaft can eliminate the requirement for additional bearing supports along the spanning shaft because the shaft is supported at the ends by connected equipment through the single engagement couplings.

Flex hubs on floating shafts

Assembly of the flex hubs on the floating shaft allows for easier replacement in case of coupling wear and allows the rigid hubs with their larger bore capacities to be used on the connected equipment shafts. This often allows for smaller coupling sizes in the design. See drawings on **page 44**.

Rigid hubs on floating shaft

When the rigid hubs are on the floating shaft, shorter shaft spans can be used since no cover drawback is required. Since the flex hubs are on the outboard side, the points of articulation are further apart, thus allowing for greater offset misalignment. See drawings on **page 44**.

Table 1

Floating shaft data

Size	Assembly rated torque	SB diameter	SD diameter	Maximum DBSE for r/min						
				1 750	1 430	1 170	870	720	580	< 540
–	Nm	mm	–	–						
10	493 1 139	38 47,5	40 51	1 371 1 549	1 524 1 727	1 676 1 905	1 955 2 209	2 159 2 438	2 387 2 717	2 463 2 794
15	1 169 2 350	51 60,3	54 76	1 600 1 752	1 778 1 930	1 955 2 133	2 286 2 463	2 514 2 717	2 794 3 022	2 870 3 124
20	2 282 4 270	63,5 73	66,5 95	1 778 1 905	1 981 2 108	2 184 2 336	2 540 2 717	2 794 2 971	3 098 3 327	3 200 3 429
25	4 463 7 474	79,5 92	82,5 95	1 981 2 133	2 209 2 362	2 438 2 616	2 819 3 022	3 098 3 237	3 454 3 708	3 556 3 835
30	8 508 12 100	98,5 105	101,5 127	2 209 2 260	2 438 2 514	2 692 2 794	3 124 3 225	3 454 3 556	3 835 3 962	3 962 4 064
35	13 333 18 500	114 124	120,5 146	2 413 2 463	2 667 2 717	2 946 3 022	3 403 3 505	3 759 3 860	4 191 4 292	4 292 4 419
40	24 327 30 609	139,5 146	146 165	2 641 2 692	2 921 2 997	3 251 3 302	3 759 3 835	4 140 4 216	4 597 4 699	4 749 4 851
45	31 581 42 000	152,5 171,5	165 203	2 819 3 124	3 124 3 454	3 454 3 810	3 987 4 445	4 394 4 876	4 902 5 435	5 029 5 588
50	37 886 56 600	162 187,5	165 203	2 819 3 124	3 124 3 454	3 454 3 810	3 987 4 445	4 394 4 876	4 902 5 435	5 029 5 588
55	37 886 74 030	162 200	165 203	2 819 3 124	3 124 3 454	3 454 3 810	3 987 4 445	4 394 4 876	4 902 5 435	5 029 5 588
60	71 410 90 404	200 216	203 217,5	3 124 3 225	3 454 3 581	3 810 3 962	4 445 4 597	4 876 5 054	5 435 5 613	5 588 5 791
70	71 410 13 5000	200 241,5	203 243	3 124 3 403	3 454 3 784	3 810 4 191	4 445 4 851	4 876 5 334	5 435 5 943	5 588 6 121

Assembly torque ratings are limited by the coupling size, shaft end diameter or both.
Interpolate for intermediate speeds. The maximum DBSE is based on 70% of the critical speed.

Diagram 1

Balancing requirements

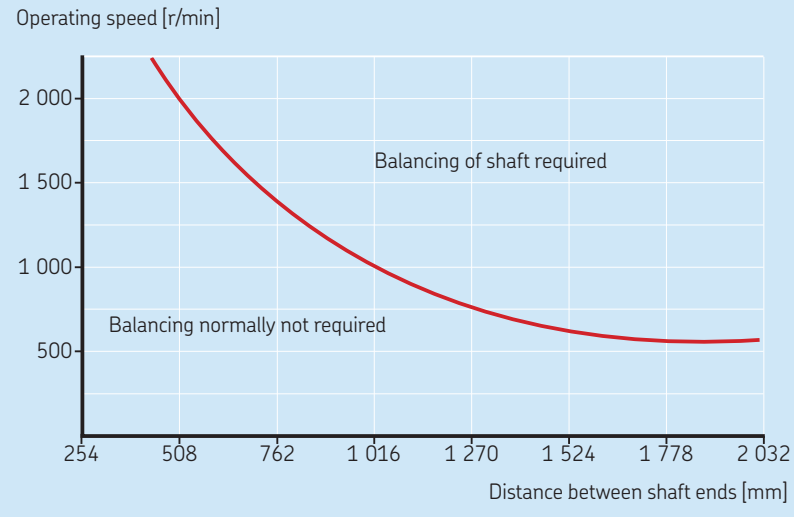

Solid floating shaft selection

Single engagement type GCSE and GCSEV couplings are used with floating shafts in either horizontal or vertical applications. For vertical applications, select a type V coupling for the lower assembly. Select floating shaft couplings as follows:

1 Use the standard or formula selection methods and see product tables on **page 43** and **44** to select the coupling. Record the system torque from the standard method or the selection torque from formula method.

2 Select the shaft diameter from product tables on **pages 43** and **44** that has an assembly torque rating equal to or greater than the system or the selection torque determined in the coupling selection.

3 Check the maximum "DBSE" for the shaft diameter you selected and the running speed for the shaft length required from product tables on **page 43** and **44**. Refer to the graph in **diagram 1** on **page 41** to determine if the shaft requires balancing.

4 If the application shaft length exceeds the maximum "DBSE" listed, select the next larger shaft diameter or the next larger size coupling.

Single engagement
Vertical and floating shaft

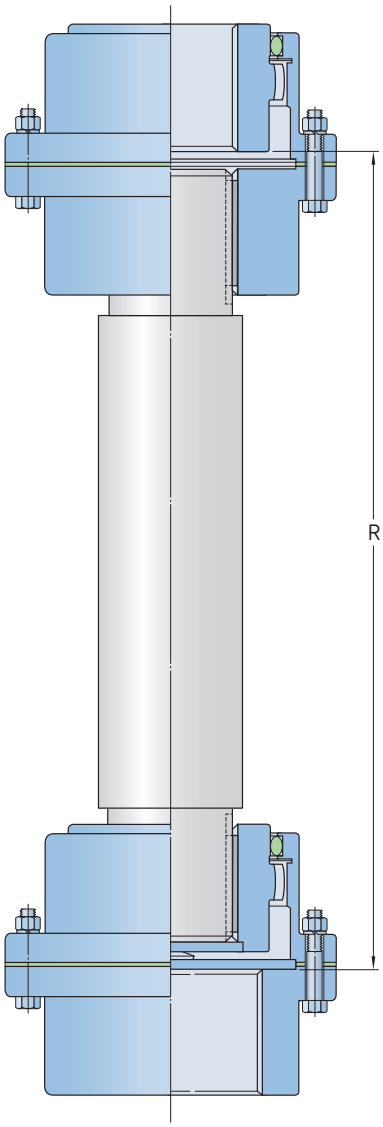

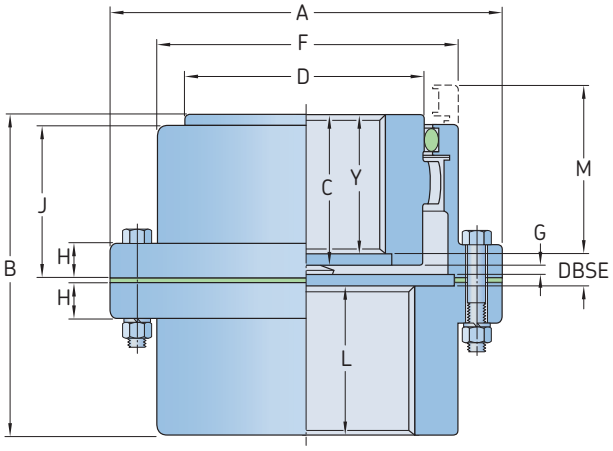

Size	Power per 100 r/min	Rated torque	Speed	Bore diameter			Dimensions												Gap	Lubricant weight	Coupling weight without bore
				Flex hub	Se hub		A	B	C	D	F	H	J	L	M	R	Y	DBSE	G		
			Max.	Max.	Max.	Min.															
–	kW	Nm	r/min	mm																kg	
10 GCV	11,9	1 139	7 000	48	60	13	116	87	43	69	84	14	39	40	51	132	32,5	14,7	4	0,02	4,5
15 GCV	24,6	2 350	5 500	60	75	19	152	99	49	86	105	19	48	46	61	152	38,6	14,7	4	0,04	9,1
20 GCV	44,7	4 270	4 600	73	92	25	178	124	62	105	126	19	59	58	77	183	51,3	14,7	4	0,07	15,9
25 GCV	78,3	7 474	4 000	92	111	32	213	156	77	131	155	21,8	72	74	92	218	65,3	16,3	5	0,12	27,2
30 GCV	127	12 100	3 600	105	130	38	240	184	91	152	180	21,8	84	88	107	248	79,8	16,3	5	0,18	43,1
35 GCV	194	18 500	3 100	124	149	51	279	213,5	106	178	211	28,4	98	102	130	298	94,0	18,0	6	0,27	61,2
40 GCV	321	30 609	2 800	146	171	64	318	243	121	210	245	28,4	111	115	145	340	105,9	22,0	7	0,47	99,8
45 GCV	440	42 000	2 600	165	194	76	346	274	135	235	274	28,4	123	131	166	388	116,3	26,7	8	0,57	136,1
50 GCV	593	56 600	2 400	178	222	89	389	309	153	254	306	38,1	141	147	183	424	134,6	27,7	9	0,91	195,0
55 GCV	775	74 030	2 200	197	248	102	425	350	168	279	334	38,1	158	173	204	464	149,6	27,7	9	1,13	263,1
60 GCV	947	90 400	2 100	222	267	114	457	384	188	305	366	25,4	169	186	229	522	168,1	30,9	10	1,70	324,3
70 GCV	1 420	135 000	1 800	254	305	127	527	454	221	343	425	28,4	196	220	267	615	194,8	39,1	13	2,27	508

Single engagement
Floating shaft

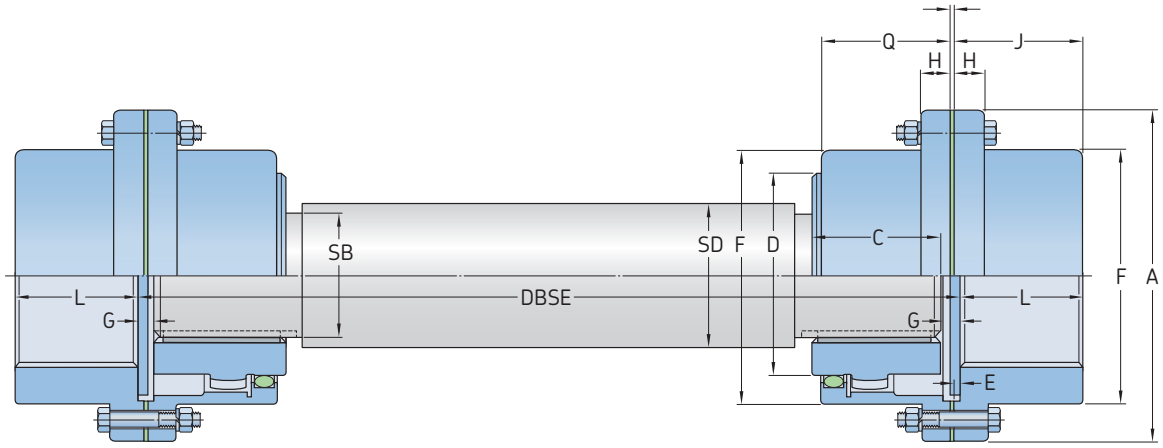

Flex hubs on floating shaft (RFFR)

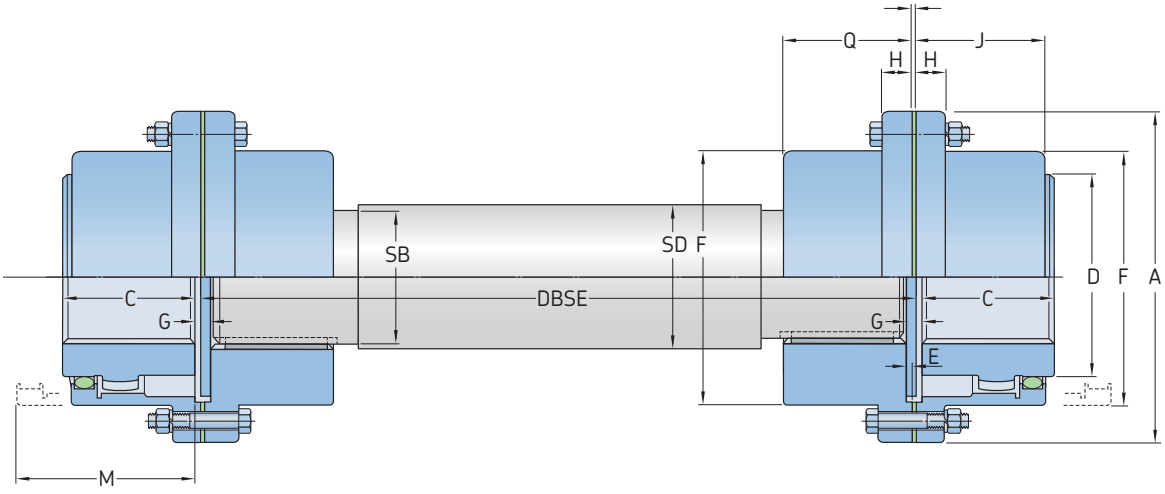

Rigid hubs on floating shaft (FRRF)

Size	DBSE		Bore diameter			Dimensions								Gap	Minimum lubricant weight	Coupling weight without bore
	Flex hub	Rigid hub	Flex hub	Rigid hub		A	C	D	F	H	J	L	M	G		
	Min.	Min.	Max.	Max.	Min.											
–	mm		mm			–								–	kg	
10 GCFS	133	92	48	60	13	116	43	69	84	14	39	40	51	4	0,02	4,5
15 GCFS	159	105	60	75	19	152	49	86	105	19	48	46	61	4	0,04	9,1
20 GCFS	197	129	73	92	25	178	62	105	126	19	59	58	77	4	0,07	15,9
25 GCFS	241	162	92	111	32	213	77	131	155	21,8	72	74	92	5	0,12	27,2
30 GCFS	279	189	105	130	38	240	91	152	180	21,8	84	88	107	5	0,18	43,1
35 GCFS	324	219	124	149	51	279	106	178	211	28,4	98	102	130	6	0,27	61,2
40 GCFS	419	248	146	171	64	318	121	210	245	28,4	111	115	145	7	0,47	99,8
45 GCFS	508	281	165	194	76	346	135	235	274	28,4	123	131	166	8	0,57	136,1
50 GCFS	533	316	178	222	89	389	153	254	306	38,1	141	147	183	9	0,91	195,0
55 GCFS	572	367	197	248	102	425	168	279	334	38,1	158	173	204	9	1,13	263,1
60 GCFS	597	397	222	267	114	457	188	305	366	25,4	169	186	229	10	1,70	324,3
70 GCFS	673	470	254	305	127	527	221	343	425	28,4	196	220	267	13	2,27	508

SKF Disc Couplings

The SKF disc coupling is the ideal solution in medium to high torque applications that require torsional rigidity, offer some allowance for misalignment, and do not require lubrication. These applications typically have a capacity range up to 178 kNm in a range of configurations including single disc, double disc, and spacer for both horizontal and vertical mounting. Standard shaft capacities are up to 289 mm.

The SKF disc coupling consists of two hubs and a laminated stainless steel disc pack secured by a series of fitted bolts retained by nylon insert lock nut nuts.

For spacer units, the spacer length is held between two disc pack sets.

Single disc units can accommodate angular (α) offset only. Double disc pack units, with a spacer, will allow for angular (α), parallel (δ), or combined offset. Both configurations will also allow for some axial (δ) movement.

The disc pack, or spacer may be removed and re-installed radially, meaning the prime mover and driven machine need not be moved at all.

The all-steel machined components allow for high speed applications to be handled with ease. With two-plane dynamic balancing, higher speeds are often permissible.

Hubs are carried with pilot bores so that boring to requirements is easy. In addition, where zero backlash is required, the use of the SKF FX Keyless Bushing is a simple and economical solution.

The SKF Disc Coupling offers the following benefits:

- Medium to high torque capability
- Cost effective (v torque and size)
- No lubrication required
- No frictional or energy losses
- Quiet operation (no meshing)
- Zero backlash
- Angular misalignment (α^c)
- Parallel offset (β) with spacer / double disc pack configuration only
- High speed capability (may require dynamic balancing over 50 m/s)
- Limited end-float / axial movement (δ)
- Temperature-tolerant (generally up to 250 °C)
- Low inertia / mass MK^2 (when compared with other metallic-type couplings)
- Various hub designs, including short or inverted hub
- Standard spacer lengths to ANSI and ISO standards generally available
- Available with longer tubular spacers (steel or composite in some instances)
- Ease of mounting / alignment and maintenance

Coupling types

The SKF Disc Coupling is available in 2 basic configurations:

- Single disc
- Double disc
  - Short spacer
  - Standard spacer
  - Custom spacer
  - Floating horizontal
  - Floating vertical

Selection

Standard selection method

This selection method can be used for most motor, turbine or engine-driven applications, with appropriate service and duty factors.

The following information is required to select an appropriate SKF Disc Coupling:

- Power (kW)
- Speed (r/min)
- Torque (Nm)
- Type of driven equipment
- Application and duty cycle
- Shaft diameters (or at least the maximum bore)
- Shaft gap (DBSE)
- Space limitations (if any)
- Other ambient conditions, such as
  - temperature
  - adverse environment

Where applications involve reversing or braking torque, please contact your local SKF technical expert for assessment.

1 Determine the torque of the system, using Formulae 1.1

$$M_T = \frac{kW \times 9\,550}{r/min}$$

where

M_T	Torque (moment) [Nm]
kW	Motor or demand power (kW)
r/min	Revolutions per minute [min^{-1}]

2 From the service factor tables (**→ page 89**), select a suitable service factor (F_S) for the application.

3 Determine the minimum torque requirement (MC) for the coupling by multiplying the torque determined in (1), by the service factor selected in (2):

$$M_C = M_T \times F_S$$

The coupling must have a torque capacity equal to or greater than this resultant M_C figure.

4 Check the bore size capacity for both shafts. If the bore size is too small, a larger coupling may be required to accommodate the shafts.

5 Check to make sure other parameters such as maximum permissible speed and any dimensional limitations are all met.

Standard selection example

Select a coupling to connect a 30 kW, 1 440 r/min electric motor to a cooling tower fan (force draft). The motor shaft is 48 mm, and the pump shaft 55 mm. A spacer type is required of approx. 4" (101,6 mm) for ease of maintenance. Maximum temperature is 60 degrees, with other

space limitations. Operation is 10–12 hours a day.

1 Determine the torque of the system:

$$M_T = \frac{30 \times 9\,550}{1\,440} = 199 \text{ Nm}$$

2 Determine the service factor from **page 89**.
For the type of application the F_S is 2.

3 The minimum required coupling capacity rating (M_C) is 2,0 x 199 = 398 Nm.
The coupling capacity must be equal to or greater than this figure.

4 From the tables on **page 52**, a type PHE W4D-030 is selected.

Torque capacity	774 Nm
Max. shaft Dia	58 mm
Spacer (standard)	102 mm
Maximum r/min	7 300 r/min

5 Selection summary:
Type PHE W4D-030X102MMX48X55
Complete with 102 mm spacer (standard) and hubs bored to 48 mm (H7) and 55 mm (H7) respectively.

Note: If no tolerances are given, the standard SKF bore diameter tolerances given in **table 4** (→ **page 85**) will be used.

Unless stated otherwise, all bores come with standard (ISO Metric, or BS INCH) keyways. In some instances a shallow key may be necessary (Metric DIN 6885/3).

Table 1

Disc coupling series designation[1)]

Type	Description	4 Bolt	6 Bolt	8 Bolt
Single disc	Standard	W4	–	–
Double	Short spacer	W4SD	–	–
	Standard spacer	W4D	W6D	W8D
	Custom spacer	W4F	W6F	W8F
Floating	Horizontal	W4FH	W6FH	W8FH
	Vertical	W4FVD	W6FVD	W8FVD

[1)] The series designations shown above (columns 3, 4 and 5) should be used when a complete coupling (rather than components) is being designated, such as the example shown in **5**, *Selection summary*.

Engineering data

For additional useful information on disc couplings, such as characteristics and applications of disc couplings. Please, refer to the following tables.

Order data

A disc coupling exists at least of 2 hubs and 1 disc pack and bolt kit. The number of required disc pack and bolt kits depend on coupling type. Vertical kits and vertical spacer kits might also be needed. For details refer to **table 4**.

Table 2

Maximum shaft diameter and projection distance (S in fig. 1, page 52) for all series

Size		00	01	02	03	04	05	10	15	20	25	30	35	40	45	50	55	60	65
–		mm																	
W4	Element bore	–	–	–	–	–	25	30	32	40	45	51	69	76	89	101	**108**	**–**	**–**
	G	–	–	–	–	–	5,8	7,1	8,4	11	11,2	12,5	16	17	22,8	24	**26**	**–**	**–**
	S	–	–	–	–	–	2	2	2	3	3	3	4	4	5	5	**6**	**–**	**–**
W6	Element bore	60	69	78	83	98	142	142	163	184	200	216	231	253	280	307	**322**	**338**	**354**
	G	10,3	11,0	12,0	14,0	17,0	17,5	19,0	19,0	22,5	28,0	31,0	31,0	34,0	35,5	37,0	**37,5**	**37,5**	**37,5**
	S	2	2	2	2	2	3	3	3	3	3	5	5	5	5	5	**5**	**5**	**5**
W8	Element bore	–	124	–	143	–	155	155	178	201	218	235	252	275	304	343	**350**	**368**	**384**
	G	–	12,2	–	13,7	–	17,5	19,0	19,0	21,5	24,0	29,5	29,5	31,0	32,0	32,5	**34,0**	**34,5**	**35,5**
	S	–	2	–	2	–	4	4	4	4	4	6	6	6	6	6	**6**	**3**	**6**

Table 3

Recommended total indicator readout (TIR) reading for all series

Size		00	01	02	03	04	05	10	15	20	25	30	35	40	45	50	55	60	65
–		mm																	
W4	Gauge reading (TIR)	–	–	–	–	–	0,12	0,15	0,16	0,2	0,22	0,25	0,29	0,34	0,37	0,43	**0,48**	**–**	**–**
W6		0,21	0,24	0,28	0,32	0,37	0,48	0,48	0,53	0,6	0,65	0,71	0,77	0,81	0,88	0,96	**1,02**	**1,09**	**1,13**
W8		–	0,37	–	0,43	–	0,48	0,48	0,53	0,6	0,65	0,71	0,77	0,81	0,88	0,96	**1,02**	**1,09**	**1,13**

Table 4

Order data

Coupling type	Hubs				Disc pack		Bolt kit		Vertical kit		Spacer / Vertical kit (VKIT)	
	Solid bore	Qty	Bored to size[1]	Qty		Qty		Qty		Qty	(... = DBSE dimension)	Qty
Single-flex (W4)	PHE W4-15HUBRSB	2 or	PHE W4-15HUB...MM	2	PHE W4-15DPACK	1	PHE W4-15KIT	1	–		–	
Double-flex (W4), with spacer	PHE W4-15HUBRSB	2 or	PHE W4-15HUB...MM	2	PHE W4-15DPACK	2	PHE W4-15KIT	2	–		PHE W4-15X...MM	1
Double-flex floating	PHE W6-35HUBRSB	2 or	PHE W6-35HUB...MM	2	PHE W6-35DPACK	2	PHE W6-35KIT	2	–		PHE W6-35FSX...MM	1
Double-flex semi-floating	PHE W6-35HUBRSB	2 or	PHE W6-35HUB...MM	2	PHE W6-35DPACK	1	PHE W6-35KIT	1	–		PHE W6-35SFSSPX...MM	1
Single-flex (vertical)	PHE W4-15HUBRSB	2 or	PHE W4-15HUB...MM	2	PHE W4-15DPACK	1	PHE W4-15KIT	1	PHE W4-15VKIT	1	–	–
Double-flex (vertical) with spacer	PHE W6-35HUBRSB	2 or	PHE W6-35HUB...MM	2	PHE W6-35DPACK	2	PHE W6-35KIT	2	PHE W6-35VKIT	1	PHE W6-35X...MM	1
Double-flex floating (vertical)	PHE W6-35HUBRSB	2 or	PHE W6-35HUB...MM	2	PHE W6-35DPACK	2	PHE W6-35KIT	2	PHE W6-35VKIT	1	PHE W6-35FSX...MM	1

The complete coupling designation consists of the series, size and bore details. If bore is not specified, solid bore (RSB) is supplied, for example: PHE W6D-35x50MMx50MM or PHE W6D-45x350MMx50x50MM, where 350 mm is the required DBSE.
Unless specified, bore tolerance will be H7.
Option of taper bushing in the hub (mounting type F) is available on request. Note that coupling capacity may be reduced due to the taper bushing capacity. FX Keyless bushings are also an option in some cases. Please, refer to SKF for details on both options.
[1] For bored to size designations, add bore size. For example: PHE W4D-45X50MMX45MM.

Table 5

Disc laminate swagging

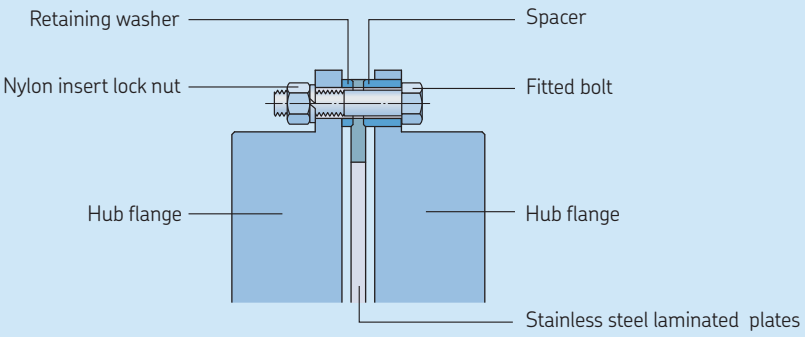

Table 6

Standard disc configuration

Type

W4 Series – 4 Bolt	W6 Series – 6 Bolt	W8 Series – 8 Bolt

Style

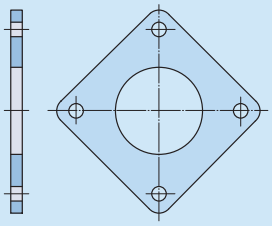

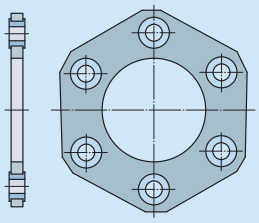

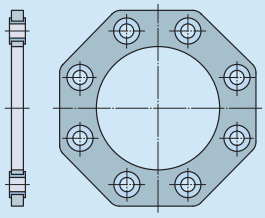

Characteristics

- Zero backlash
- Laminated stainless steel (grade 304; DIN X5CrNi189)
- Flat laminates, with washers
- Fitted bolts with nylon insert lock nut nuts
- Alternate (axial) bolt mountings for ease of installation and balance
- Maximum angular misalignment (α): 1°
- Maximum torque: 6 370 Nm
- Lowest reaction forces

- Zero backlash
- Laminated stainless steel (grade 304; DIN X5CrNi189)
- Double joint (disc) design
- Fitted bolts with nylon insert lock nut nuts
- Alternate (axial) bolt mountings for ease of installation and balance
- Swagged laminate holes
- Maximum angular misalignment (α): 0,7°
- Maximum torque: 128 kNm

- Zero backlash
- Laminated stainless steel (grade 304; DIN X5CrNi189)
- Double joint (disc) design
- Fitted bolts with nylon insert lock nut nuts
- Alternate (axial) bolt mountings for ease of installation and balance
- Swagged laminate holes
- Maximum angular misalignment (α): 0,5°
- Maximum torque: 178 kNm

Typical applications

- General industrial applications
- Maximum angular misalignment
- Servo motor and stepper drives
- Positioning / indexing
- Constant loads
- Lower torque applications, with uniform or smooth characteristics load characterics
- Compact design

- General industrial applications
- Maximum angular misalignment
- Reversing and reciprocating loads
- Medium shock
- Medium torque applications
- Higher speeds with two-plane (dynamic) balancing
- More compact option offered for similar loadings, than the W4 (subject to shaft capacity)
- Lower alignment capability than W4 series

- High torque, lower speed applications
- Heavier shock loadings
- Engine drive applications
- Heaving reversing loads
- Lowest misalignment capacity compared with W4 and W6

Installation

1 Clean all metal components. Remove burrs from flange bores and ensure keyways are clean.

2 Shaft projection length
When the distance between the ends of the shaft is less than "G", adjust the flange placement on the shaft to recommended dimension "G". This can be done by projecting the shaft (→ **fig. 1**).

If shaft projection into the element zone is required, please refer to **table 2** on **page 47** for maximum diameter for each size element.

The maximum projection for shafts larger than the stated allowance is listed in **table 2** on **page 47**, dimension "S". The projections ensure that the shaft does not interfere with the disc element.

3 Alignment
Using the dial gauge, check the coupling installation alignment for accuracy, both angular (α) and parallel offset (Δ).

A Checking for angular misalignment. (→ **fig. 2**).

To conduct an angular misalignment check, fix the dial gauge on one hub and rotate the hub to find the minimum reading. Then set the gauge to zero.

Take extra care to measure the deflection away from the through holes, as they may be slightly distorted from machine work. Check deflection at the smoothest unbroken area. Refer to **table 3** for deflection of 0,1 degree.

B Checking for parallel misalignment. Check parallel alignment by using a dial gauge (→ **fig. 3**).

An accuracy reading should be taken as the shaft is rotated. Any parallel misalignment will produce an equivalent angle in floating shaft couplings, or where there is a large distance between shafts.

Note: Misalignment of 2 mm parallel per 1 000 mm distance between flanges results in 1 degree angular misalignment.

4 Coupling assembly
As shown in the exploded view diagram (→ **fig. 4**), the coupling is assembled completely from supplied parts. It is important to take extra care when fitting the bolts, as forcing them through may damage the thick washer and result in protrusion.

Fasten all the nylon insert lock nut nuts to the required torque, as shown in the relevant disc coupling ratings tables.

The correct torque will ensure that the coupling operates smoothly. Alternate the projection of bolt heads and nuts for the best possible transmission and balance.

5 Running of the couplings
To ensure longest possible service life, the coupling should be rechecked for both angular (α) and parallel (Δ) misalignment, one to two hours after initial start-up.

At the same time, it is also necessary to check and re-tighten the bolts to the tightening torque shown in the relevant dimension tables. The nylon insert lock nut nuts can be re-fastened up to 10 times, after which , replacement is recommended.

The bolts supplied with the coupling are special machined fitted bolts, with tolerances to ensure the best possible fit.

Note: Do not replace with standard commercial bolts, as looseness and imbalance may occur.

Any damage to the stainless disc element pack requires immediate replacement.

Fig. 1

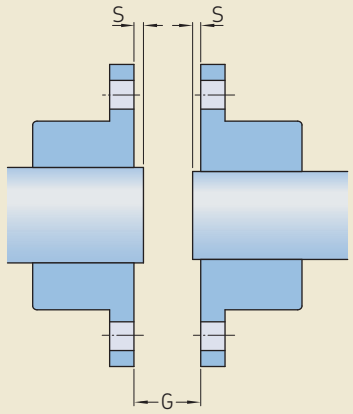

Fig. 2

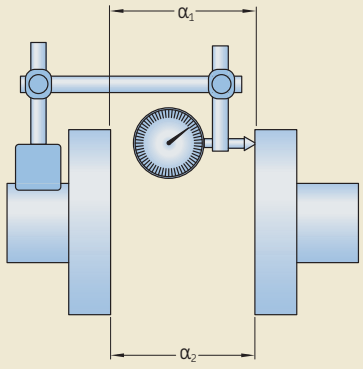

Fig. 3

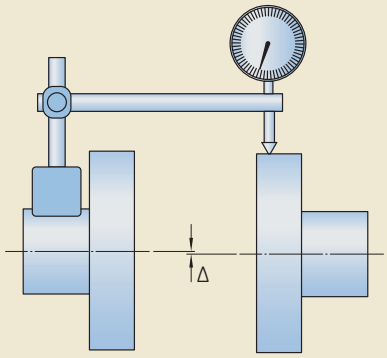

Fig. 4a

Diagram of components (exploded view) – 4 bolt couplings

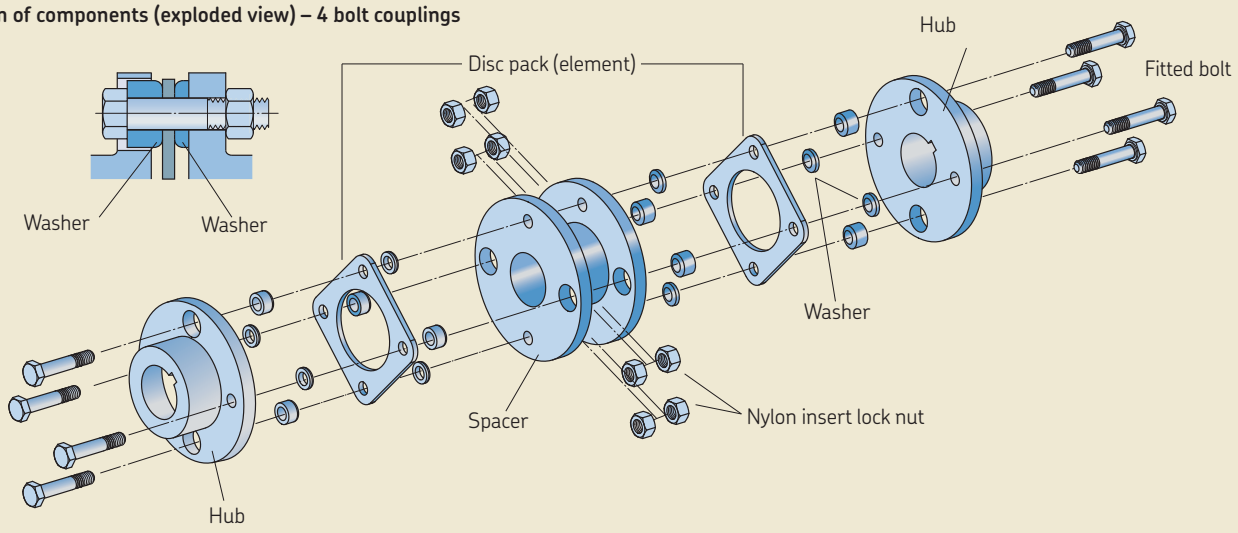

Fig. 4b

Diagram of components (exploded view) – 6 and 8 bolt couplings

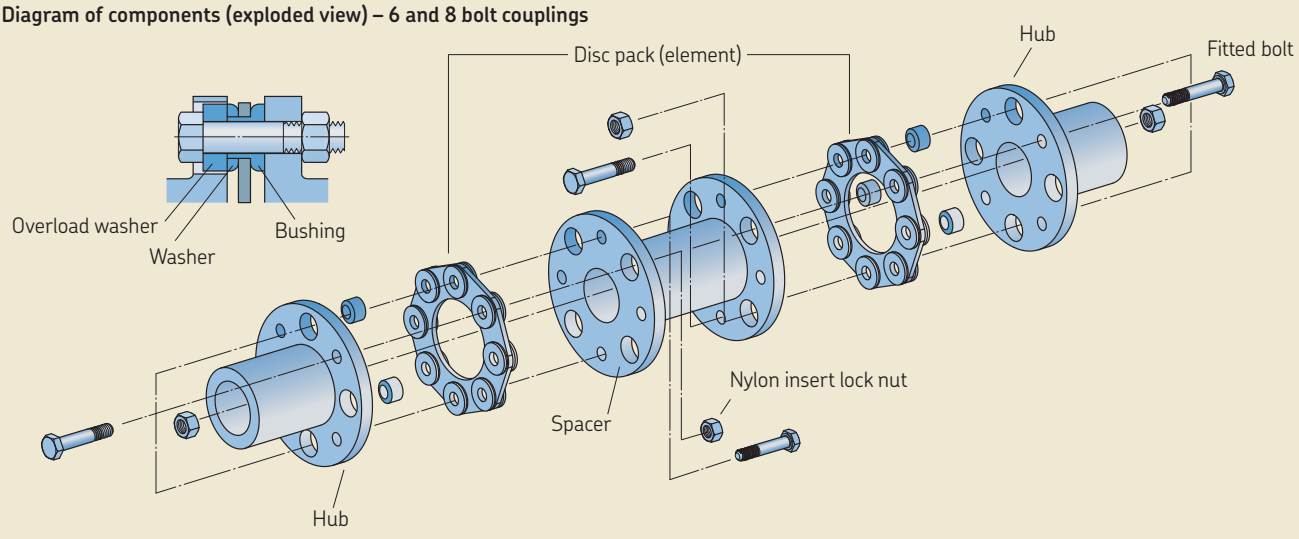

W4 – 4 Bolt single

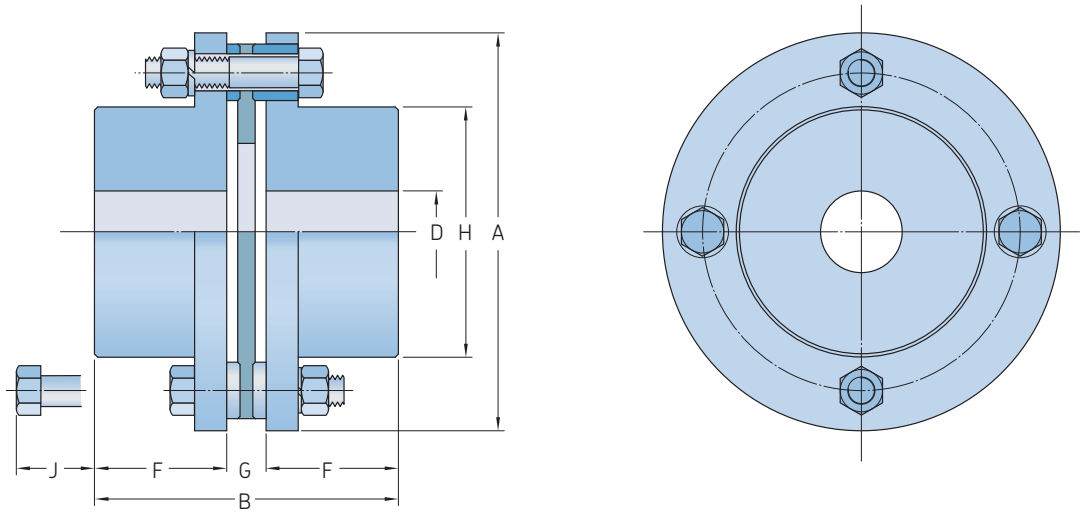

Size	Rated torque	Speed[1]	Bore diameter		Dimensions						Tightening torque	Coupling weight without bore and min. DBSE
			D		A	B	F	G	H	J		
		Max.	Min.	Max.								
–	Nm	r/min	mm		–						Nm	kg
05	34,3	10 000	8	23	67	55,8	25	5,8	33	16	9	0,6
10	90	10 000	10	32	81	57,1	25	7,1	46	16	9	1,1
15	176	10 000	10	35	93	66,4	29	8,4	51	24	22	1,7
20	245	10 000	10	42	104	79	34	11	61	30	22	2,5
25	421	8 300	16	50	126	93,2	41	11,2	71	27	41	4,3
30	774	7 300	16	58	143	108,5	48	12,5	84	28	72	6,9
35	1 274	6 200	25	74	168	130	57	16	106	26	72	11,3
40	2 058	5 400	25	83	194	145	64	17	118	30	160	16,7
45	3 332	4 900	45	95	214	174,8	76	22,8	137	34	160	22,7
50	4 900	4 200	50	109	246	202	89	24	156	26	220	35,4
55	6 370	3 800	50	118	276	230	102	26	169	42	570	52

[1] If higher speed required, contact SKF
[2] For dimension C in type 4F, this varies depending on spacer length
[3] For coupling weight in type 4F, this varies depending on spacer length

W4 – 4 Bolt double

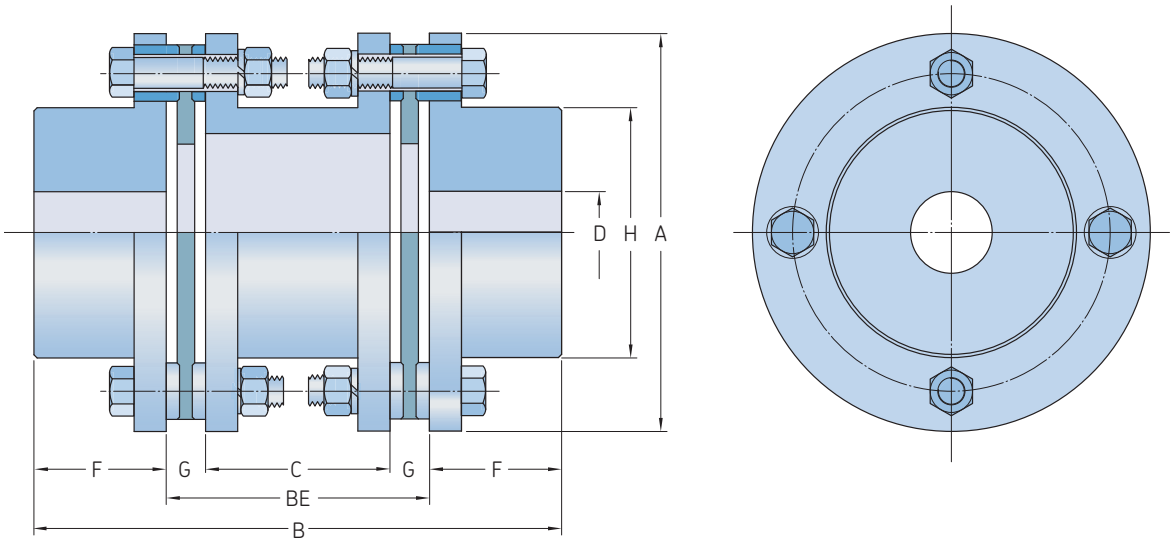

Size	Rated torque	Speed[1]	Bore diameter		Dimensions									Tightening torque	Coupling weight without bore and min. DBSE
			D		A	B	BE[4]		C[2]	F	G	H	J		
		Max.	Min.	Max.			Min.	Max.							
–	Nm	r/min	mm		–									Nm	kg
05	33,3	10 000	8	23	67	86	36		24	25	5,8	33	16	9	1,1
	33,3	10 000	8	23	67	138,9	88,9		77	25	5,8	33	16	9	1,2
10	90,2	10 000	10	32	81	89	39		25	25	7,1	46	16	9	1,7
	90,2	10 000	10	32	81	138,9	88,9		75	25	7,1	46	16	9	1,9
15	176	10 000	10	35	93	105	47		30	29	8,4	51	24	22	2,7
	176	10 000	10	35	93	159,6	101,6		85	29	8,4	51	24	22	2,9
20	245	10 000	10	42	104	121	53		31	34	11	61	30	22	6,6
	245	10 000	10	42	104	195	127,0		105	34	11	61	30	22	4,1
25	421	8 300	16	50	126	144	62		40	41	11,2	71	27	41	6,6
	421	8 300	16	50	126	209	127,0		105	41	11,2	71	27	41	7,1
30	774	7 300	16	58	143	165	69		44	48	12,5	84	28	72	10,3
	774	7 300	16	58	143	223	127,0		102	48	12,5	84	28	72	10,8
35	1 274	6 200	25	74	168	192	78		46	57	16	106	26	72	15,6
	1 274	6 200	25	74	168	241	127,0		95	57	16	106	26	72	16,3
40	2 058	5 400	25	83	194	217	89		55	64	17	118	30	160	24
	2 058	5 400	25	83	194	267,7	139,7		106	64	17	118	30	160	24,7
45	3 332	4 900	45	90	214	249	97		51	76	22,8	137	34	160	31,5
	3 332	4 900	45	90	214	304,4	152,4		107	76	22,8	137	34	160	32,5
50	4 900	4 200	50	109	246	287	109		61	89	24	156	26	220	48,4
	4 900	4 200	50	109	246	355,8	177,8		130	89	24	156	26	220	50
55	5 880	3 800	50	118	276	338	134		82	102	26	169	42	570	73,9
	5 880	3 800	50	118	276	381,8	177,8		126	102	26	169	42	570	75

[1] If higher speed required, contact SKF
[2] For dimension C in type 4F, this varies depending on spacer length
[3] For coupling weight in type 4F, this varies depending on spacer length
[4] Preferred standard spacer lengths to both ISO and ANSI standards are available.

W6 – 6 Bolt double

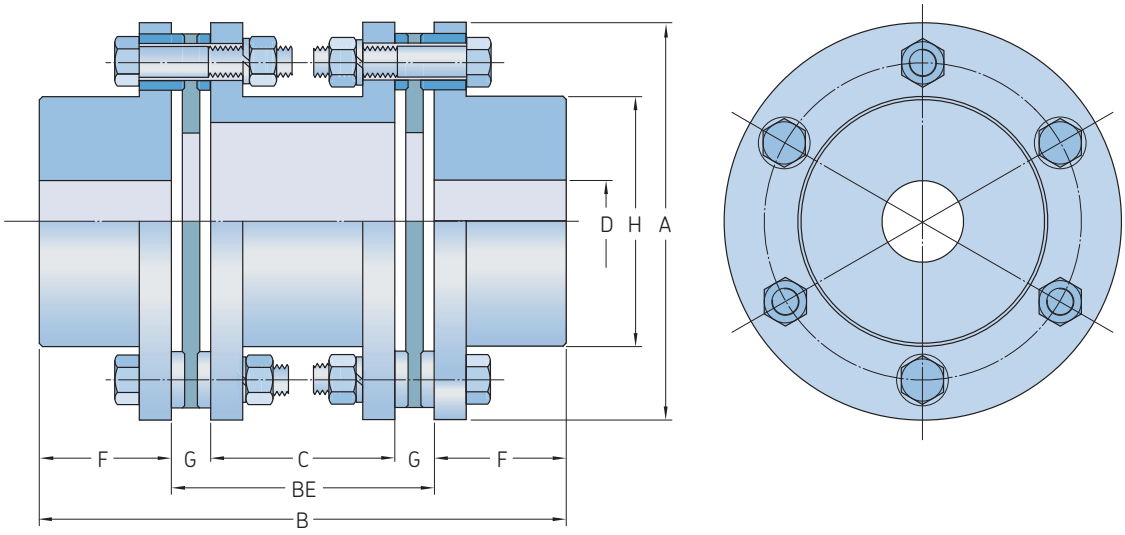

Size	Rated torque	Speed[1]	Bore diameter		Dimensions								Tightening torque	Coupling weight without bore and min. DBSE
		Max.	D Min.	Max.	A	B	BE[4] Min.	Max.	C[2]	F	G	H		
–	Nm	r/min	mm		–								Nm	kg
00	569	26 000	8	51	119	168	60		39.4	54	10,3	74	22	6
01	922	23 000	8	55	137	198	72		50	63	11,0	81	41	9,1
02	1 710	19 000	8	67	161	238	90		66	74	12,0	97	72	16,9
03	3 340	17 000	8	72	180	269	109		81	80	14,0	104	160	21,6
04	6 210	15 000	8	85	212	308	118		84	95	17,0	124	220	35,1
05	6 080	11 600	8	111	276	377	153		118	112	17,5	161	220	65,1
10	8 240	11 600	10	111	276	377	153		115	112	19,0	161	220	66,1
15	10 700	10 300	10	133	308	440	172		134	134	19,0	193	440	107,8
20	17 800	9 200	10	152	346	497	191		146	153	22,5	218	570	156,8
25	26 400	8 500	16	165	375	553	223		167	165	28,0	240	1 100	211,8
30	33 400	7 800	16	178	410	610	254		192	178	31,0	258	1 500	274,8
35	39 900	7 200	25	187	445	646	270		208	188	31,0	272	1 700	333
40	46 300	6 800	25	205	470	686	274		206	206	34,0	297	1 700	400
45	59 800	6 200	45	231	511	749	287		216	231	35,5	334	1 700	525
50	74 700	5 700	50	254	556	800	292		218	254	37,0	364	3 000	676
55	92 600	5 400	50	263	587	839	311		236	364	37,5	382	3 500	803
60	107 000	5 000	50	275	629	895	343		268	276	37,5	399	3 700	654
65	128 000	4 800	50	289	654	934	356		281	289	37,5	419	4 000	1 095

[1] If higher speed required, contact SKF
[2] For dimensions B, C in type 6F, this varies depending on spacer length
[3] For coupling weight in type 4F, this varies depending on spacer length
[4] Preferred standard spacer lengths to both ISO and ANSI standards are available.

W8 – 8 Bolt double

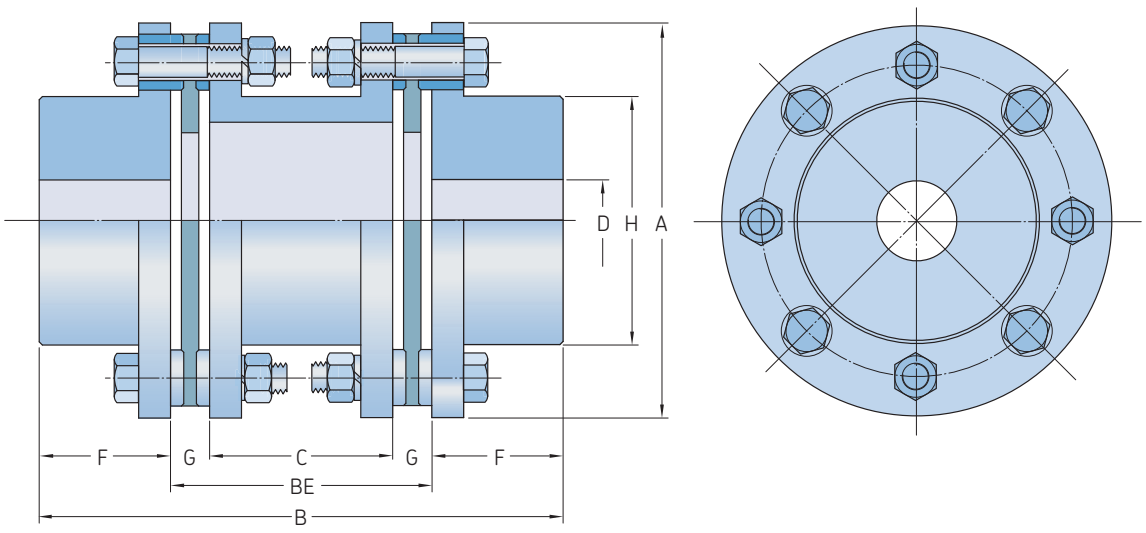

Size	Rated torque	Speed[1]	Bore diameter		Dimensions							Tightening torque	Coupling weight without bore and min. DBSE[3]
			D		A	B[2]	BE[4][5]	C[2]	F	G	H		
		Max.	Min.	Max.									
–	Nm	r/min	mm		–							Nm	kg
01	3 840	15 000	8	95	214	333	117	92,6	108	12,2	137	72	38
03	7 120	13 000	8	108	246	369	127	99,6	121	13,7	156	160	56
05	8 970	11 600	8	111	276	421	153	118	134	17,5	161	220	73
10	11 800	11 600	10	111	276	421	153	115	134	19,0	161	220	74
15	15 400	10 300	10	133	308	492	172	134	160	19,0	193	440	120
20	25 600	9 200	10	152	346	557	191	148	183	21,5	218	570	175
25	37 800	8 500	16	165	375	619	223	175	198	24,0	240	1 100	234
30	47 800	7 800	16	178	410	682	254	195	214	29,5	258	1 500	305
35	57 100	7 200	25	187	445	720	270	211	225	29,5	272	1 700	368
40	64 400	6 800	25	205	470	768	274	212	247	31,0	297	1 700	448
45	83 700	6 200	45	231	511	843	287	223	278	32,0	334	1 700	592
50	103 000	5 700	50	254	556	902	292	227	305	32,5	364	3 000	762
55	128 000	5 400	50	263	587	945	311	243	317	34,0	382	3 500	902
60	149 000	5 000	50	275	629	1005	343	274	331	34,5	399	3 700	1 068
65	178 000	4 800	50	289	654	1050	356	285	347	35,5	419	4 000	1 231

[1] If higher speed required, contact SKF
[2] For dimension B, C in type 6F, this varies depending on spacer length
[3] For coupling weight in type 4F, this varies depending on spacer length
[4] Maximum permissible Be will be determined and limited by operating speed.
[5] Preferred standard spacer lengths to both ISO and ANSI standards are available.

Floating shaft disc couplings

SKF Floating shaft disc couplings transmit power between widely separated machine shafts, or where large parallel misalignment exists.

Allowable rotational speeds are determined, and limited, by the span and the balance condition of the coupling system. Balancing is necessary for high speeds and long shafts as indicated in the following tables **1** to **3**.

Disc floating shaft couplings are also available for vertical applications with the addition of a vertical floating shaft kit .

1 Do not use floating shaft couplings with long, overhanging shafts.
2 Consult SKF for spans greater than 6 000 mm, or for speeds in excess of those indicated in the tables.

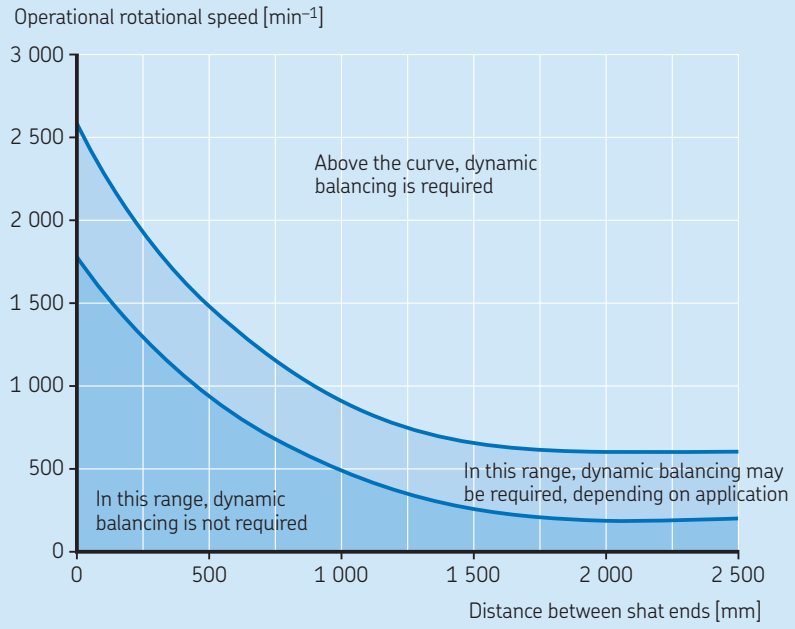

Table 1

W4F Speed

Size	Bore	Maximum distance between shaft ends (BE max) for various speeds								
		1 800	1 500	1 200	1 000	900	750	720	600	500
	Max.									
–	r/min	r/min								
010	32	1 610	1 760	1 970	2 160	2 280	2 500	2 550	2 790	3 060
015	35	1 690	1 850	2 070	2 270	2 390	2 620	2 670	2 930	3 210
020	42	1 880	2 050	2 300	2 520	2 650	2 910	2 970	3 250	3 560
025	50	2 010	2 210	2 470	2 700	2 850	3 120	3 190	3 490	3 830
030	58	2 220	2 430	2 720	2 980	3 140	3 440	3 510	3 850	4 210
035	74	2 500	2 740	3 060	3 350	3 540	3 870	3 950	4 330	4 750
040	83	2 690	2 950	3 300	3 610	3 800	4 180	4 250	4 660	5 120
045	95	2 890	3 170	3 540	3 880	4 090	4 490	4 570	5 010	5 500
050	109	3 100	3 400	3 800	4 160	4 390	4 820	4 910	5 370	5 900
055	118	3 230	3 540	3 960	4 330	4 560	5 010	5 100	5 590	–

For BE dimensions over 6 000 mm, please contact SKF
Floating shaft couplings should not be used with long overhang shafts

Table 2

W6F Speed

Size	Bore	Maximum distance between shaft ends (BE max) for various speeds								
		1 800	1 500	1 200	1 000	900	750	720	600	500
	Max.									
–	r/min	r/min								
000	51	2 010	2 210	2 470	2 700	2 850	3 120	3 190	3 490	3 830
001	55	2 220	2 430	2 720	2 980	3 140	3 440	3 510	3 850	4 210
002	67	2 500	2 740	3 060	3 350	3 540	3 870	3 950	4 330	4 750
003	72	2 890	3 170	3 540	3 880	4 090	4 490	4 570	5 010	5 500
004	85	3 100	3 400	3 800	4 160	4 390	4 820	4 910	5 370	5 900
005	111	3 100	3 400	3 800	4 160	4 390	4 820	4 910	5 370	5 900
010	111	3 100	3 540	3 800	4 160	4 390	4 820	4 910	5 370	5 900
015	133	3 230	3 540	3 960	4 330	4 560	5 010	5 100	5 590	–
020	152	3 720	4 070	4 560	4 990	5 250	5 770	5 880	–	–
025	165	3 720	4 070	4 560	4 990	5 250	5 770	5 880	–	–
030	178	3 860	4 030	4 510	4 940	5 200	5 710	5 810	–	–
035	187	4 140	4 540	5 070	5 560	5 850	–	–	–	–
040	205	4 140	4 540	5 070	5 560	5 850	–	–	–	–
045	231	4 530	4 960	5 540	–	–	–	–	–	–
050	254	4 790	5 240	5 860	–	–	–	–	–	–
055	263	4 790	5 240	5 860	–	–	–	–	–	–
060	275	4 790	5 240	5 860	–	–	–	–	–	–
065	289	5 120	5 600	–	–	–	–	–	–	–

For BE dimensions over 6 000 mm, please contact SKF
Floating shaft couplings should not be used with long overhang shafts

Table 3

W8F Speed

Size	Bore	Maximum distance between shaft ends (BE max) for various speeds								
		1 800	1 500	1 200	1 000	900	750	720	600	500
	Max.									
–	r/min	r/min								
001	95	2 890	3 170	3 540	3 880	4 090	4 490	4 570	5 010	5 500
003	108	3 100	3 400	3 800	4 160	4 390	4 820	4 910	5 370	5 900
005	111	3 100	3 400	3 800	4 160	4 390	4 820	4 910	5 370	5 900
010	111	3 100	3 400	3 800	4 160	4 390	4 820	4 910	5 370	5 900
015	133	3 230	3 450	3 960	4 330	4 560	5 010	5 100	5 590	–
020	152	3 720	4 070	4 560	4 990	5 250	5 770	5 880	–	–
025	165	3 680	4 030	4 510	4 940	5 200	5 710	5 810	–	–
030	178	3 680	4 030	4 510	4 940	5 200	5 710	5 810	–	–
035	187	4 100	4 490	5 020	5 500	5 790	–	–	–	–
040	205	4 100	4 490	5 020	5 500	5 790	–	–	–	–
045	231	4 480	4 900	5 480	6 010	–	–	–	–	–
050	254	4 730	5 180	5 800	–	–	–	–	–	–
055	263	4 730	5 180	5 800	–	–	–	–	–	–
060	275	4 730	5 180	5 800	–	–	–	–	–	–
065	289	5 060	5 540	–	–	–	–	–	–	–

For BE dimensions over 6 000 mm, please contact SKF
Floating shaft couplings should not be used with long overhang shafts

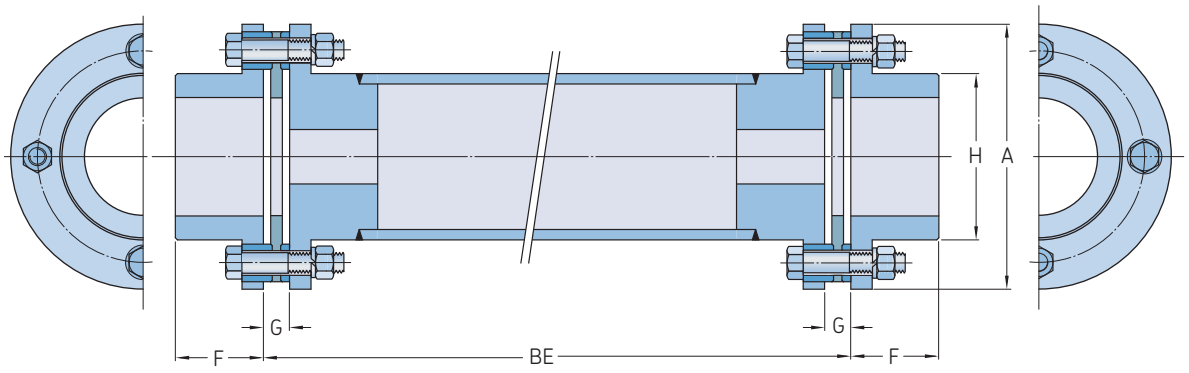

Size	Rated torque[2]	Speed[1]	Bore diameter		Dimensions							Tightening torque	Coupling weight without bore and min. DBSE
		Max.	D Min.	Max.	A	BE[3] Min.	F	G	H	J	C		
–	Nm	r/min	mm		–							Nm	kg
10 FH	90,2	10 000	10	32	81	72	25	7.1	46	16	Dimension	9	Weight varies on length of spacer C
15 FH	176	10 000	10	35	93	76	29	8.4	51	24	varies on BE	22	
20 FH	245	10 000	10	42	104	88	34	11	61	30	required	22	
25 FH	421	8 300	16	50	126	99	41	11,2	71	27		41	
30 FH	774	7 300	16	58	143	111	48	12,5	84	28		72	
35 FH	1 274	6 200	25	74	168	142	57	16	106	26		72	
40 FH	2 058	5 400	25	83	194	154	64	17	118	30		160	
45 FH	3 332	4 900	45	90	214	183	76	22.8	137	34		160	
50 FH	4 900	4 200	50	109	246	211	89	24	156	26		220	
55 FH	5 880	3 800	50	118	276	234	102	26	169	42		570	

[1] Maximum rotational speed (r/min) is based on parallel misalignment no more than 2/1 000
[2] Rated torque is a maximum figure
[3] For BE dimensions over 6 000 mm, please contact SKF

W6 FH – Floating shaft

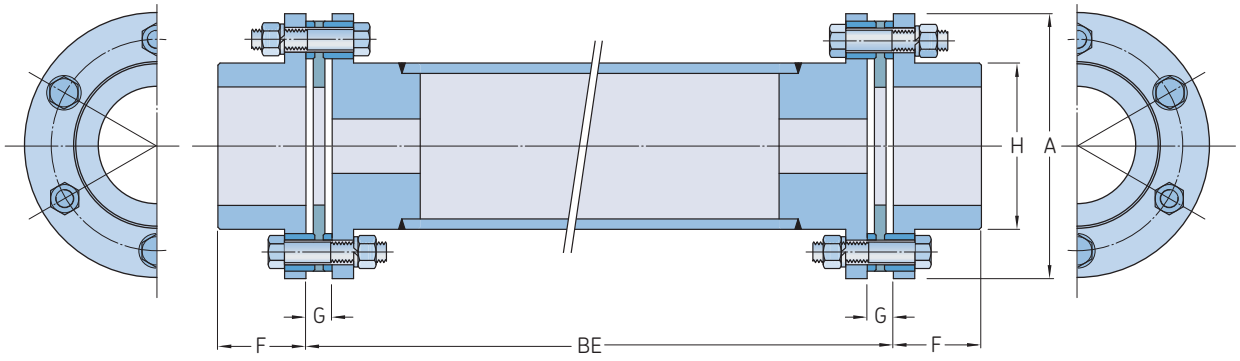

Size	Rated torque[2]	Speed[1]	Bore diameter		Dimensions					Tightening torque	Coupling weight without bore and min. DBSE
			D		A	BE	F	G	H		
		Max.	Min.	Max.							
–	Nm	r/min	mm		–					Nm	kg
00 FH	569	26 000	8	51	119	60	54	10,3	74	22	6
01 FH	922	23 000	8	55	137	72	63	11,0	81	41	9,1
02 FH	1 710	19 000	8	67	161	90	74	12,0	97	72	16,9
03 FH	3 340	17 000	8	72	180	109	80	14,0	104	160	21,6
04 FH	6 210	15 000	8	85	212	118	95	17,0	124	220	35,1
05 FH	6 080	11 600	8	111	276	153	112	17,5	161	220	65,1
10 FH	8 240	11 600	10	111	276	153	112	19,0	161	220	66,1
15 FH	10 700	10 300	10	133	308	172	134	19,0	193	440	107,8
20 FH	17 800	9 200	10	152	346	191	153	22,5	218	570	156,1
25 FH	26 400	8 500	16	165	375	223	165	28,0	240	1 100	211,8
30 FH	33 400	7 800	16	178	410	254	178	31,0	258	1 500	274,5
35 FH	39 900	7 200	25	187	445	270	188	31,0	272	1 700	333,3
40 FH	46 300	6 800	25	205	470	274	206	34,0	297	1 700	399,2
45 FH	59 800	6 200	45	231	511	287	231	35,5	334	1 700	525,3
50 FH	74 700	5 700	50	254	556	292	254	37,0	364	3 000	676,3
55 FH	92 600	5 400	50	263	587	311	263	37,5	382	3 500	803,4
60 FH	107 000	5 000	50	275	629	343	231	37,5	399	3 700	954,1
65 FH	128 000	4 800	50	289	654	356	254	37,5	419	4 000	1 095,3

[1] Maximum rotational speed (r/min) is based on parallel misalignment no more than 2/1 000
[2] Rated torque is a maximum figure

W8 FH – Floating shaft

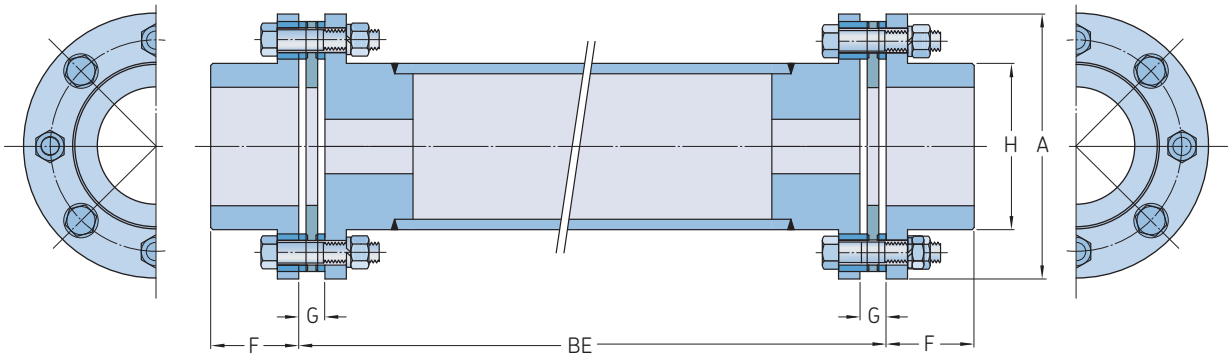

Size	Rated torque[2]	Speed[1]	Bore diameter		Dimensions					Tightening torque	Coupling weight without bore and min. DBSE
			D		A	BE[4]	F	G	H		
		Max.	Min.	Max.		Min.					
–	Nm	r/min	mm		–					Nm	kg
01 FH	3 840	15 000	8	51	119	240	54	10,3	74	22	6
03 FH	7 120	13 000	8	55	137	269	63	11,0	81	41	9,1
05 FH	8 970	11 600	8	67	161	255	74	12,0	97	72	16,9
10 FH	11 800	11 600	8	72	180	258	80	14,0	104	160	21,6
15 FH	15 400	10 300	8	85	212	278	95	17,0	124	220	35,1
20 FH	25 600	9 200	10	111	276	283	112	17,5	161	220	65,1
25 FH	37 800	8 500	16	111	276	308	112	19,0	161	220	66,1
30 FH	47 800	7 800	16	133	308	319	134	19,0	193	440	107,8
35 FH	57 100	7 200	25	152	346	339	153	22,5	218	570	156,1
40 FH	64 400	6 800	25	165	375	342	165	28,0	240	1 100	211,8
45 FH	83 700	6 200	45	178	410	364	178	31,0	258	1 500	274,5
50 FH	103 000	5 700	50	187	445	365	188	31,0	272	1 700	333,3
55 FH	128 000	5 400	50	205	470	408	206	34,0	297	1 700	399,2
60 FH	149 000	5 000	50	231	511	– [3]	231	35,5	334	1 700	525,3
65 FH	178 000	4 800	50	254	556	– [3]	254	37,0	364	3 000	676,3

[1] Maximum rotational speed (r/min) is based on parallel misalignment no more than 2/1 000
[2] Rated torque is a maximum figure
[3] The actual BE value will be determined by the customer
[4] For BE dimensions over 6 000 mm, please contact SKF
Floating shaft couplings should not be used with long overhang shafts

SKF Flex Couplings

SKF Flex Couplings are designed to accommodate misalignment and shock loads and dampen vibration levels. These easy to install, maintenance-free couplings are available with either a machined-to-size or tapered bore.

Couplings with a tapered bore can be Face (F) mounted or Hub (H) mounted. The more versatile Reversible (R) design can be either face or hub mounted depending on the application. These couplings are also available with a taper bushing.

SKF Flex Couplings consist of 2 flanges and 1 tyre. The flanges are phosphate coated for improved corrosion resistance. The addition of a standard sized spacer flange can be used to accommodate applications where it is advantageous to move either shaft axially without disturbing either driving or driven machines.

SKF Flex tyres are available in natural rubber compounds for applications ranging from –50 to +50 °C. Chloroprene rubber compounds should be used in applications where exposure to greases and oils are likely. These compounds can accommodate temperatures ranging from –15 to +70 °C. The chloroprene tyres should be used where fire-resistance and anti-static (F.R.A.S.) properties are required.

Selection

1 Service factor
Determine the required service factor from **tables 9** and **10** on **pages 87** and **88**.

2 Design power
Multiply the normal running power by the service factor. This gives the design power for coupling selection.

3 Coupling size
Using the data from **table 1** on **page 61**, find the speed rating for a coupling that has a power that is greater than the design power. The required SKF Flex coupling is listed at the head of the column.

4 Bore size
Using product tables on **page 65** and **68**, check if the chosen flanges can accommodate both the driving and driven shafts.

Example

A SKF Flex coupling is required to transmit 30 kW from an electric motor running at 1 440 r/min to a centrifugal pump for 14 hours per day. The diameter of the motor shaft is 30 mm. The diameter of the pump shaft is 25 mm. A tapered bore is required.

1 Service factor
The appropriate service factor is 1. See **tables 9** and **10** on **pages 87** and **88**.

2 Design power
Design power = 30 × 1 = 30 kW

3 Coupling size
By searching for 1 440 r/min in **table 1** on **page 61**, the first power figure to exceed the required 30 kW in step (2) is 37,70 kW. The size of the coupling is 70.

4 Bore size
By referring to product tables on **page 65** and **68**, it can be seen that both shaft diameters fall within the bore range available. Please note that for this coupling the bore sizes for the Face and Hub design are different.

Table 1

Power ratings (kW)

Speed	Coupling size														
	40	50	60	70	80	90	100	110	120	140	160	180	200	220	250
r/min	kW														
50	0,13	0,35	0,66	1,31	1,96	2,62	3,53	4,58	6,96	12,17	19,74	32,83	48,82	60,73	76,83
100	0,25	0,69	1,33	2,62	3,93	5,24	7,07	9,16	13,93	24,35	39,48	65,65	97,64	121,47	153,66
200	0,50	1,38	2,66	5,24	7,85	10,47	14,14	18,32	27,85	48,69	78,95	131,31	195,29	242,93	307,33
300	0,75	2,07	3,99	7,85	11,78	15,71	21,20	27,49	41,78	73,04	118,43	196,96	292,93	364,40	460,99
400	1,01	2,76	5,32	10,47	15,71	20,94	28,27	36,65	55,71	97,38	157,91	262,62	390,58	485,86	614,66
500	1,26	3,46	6,65	13,09	19,63	26,18	35,34	45,81	69,63	121,73	197,38	328,27	488,22	607,33	768,32
600	1,51	4,15	7,98	15,71	23,56	31,41	42,41	54,97	83,56	146,07	236,86	393,93	585,86	728,80	921,99
700	1,76	4,84	9,31	18,32	27,49	36,65	49,48	64,14	97,49	170,42	276,34	459,58	683,51	850,26	1 075,65
720	1,81	4,98	9,57	18,85	28,27	37,70	50,89	65,97	100,27	175,29	284,23	472,71	703,04	874,55	1 106,39
800	2,01	5,53	10,64	20,94	31,41	41,88	56,54	73,30	111,41	194,76	315,81	525,24	781,15	971,73	1 229,32
900	2,26	6,22	11,97	23,56	35,34	47,12	63,61	82,46	125,34	219,11	355,29	590,89	878,80	1 093,19	1 382,98
960	2,41	6,63	12,77	25,13	37,70	50,26	67,85	87,96	133,70	233,72	378,97	630,28	937,38	1 166,07	1 475,18
1 000	2,51	6,91	13,30	26,18	39,27	52,36	70,68	91,62	139,27	243,46	394,76	656,54	976,44	1 214,66	1 536,65
1 200	3,02	8,29	15,96	31,41	47,12	62,83	84,82	109,95	167,12	292,15	473,72	787,85	1 171,73	–	–
1 400	3,52	9,68	18,62	36,65	54,97	73,30	98,95	128,27	194,97	340,84	552,67	919,16	–	–	–
1 440	3,62	9,95	19,15	37,70	56,54	75,39	101,78	131,94	200,54	350,58	568,46	945,42	–	–	–
1 600	4,02	11,06	21,28	41,88	62,83	83,77	113,09	146,60	222,83	389,53	631,62	–	–	–	–
1 800	4,52	12,44	23,94	47,12	70,68	94,24	127,23	164,92	250,68	438,22	–	–	–	–	–
2 000	5,03	13,82	26,60	52,36	78,53	104,71	141,36	183,25	278,53	–	–	–	–	–	–
2 200	5,53	15,20	29,26	57,59	86,39	115,18	155,50	201,57	–	–	–	–	–	–	–
2 400	6,03	16,59	31,92	62,83	94,24	125,65	169,63	–	–	–	–	–	–	–	–
2 600	6,53	17,97	34,58	68,06	102,09	136,13	183,77	–	–	–	–	–	–	–	–
2 800	7,04	19,35	37,24	73,30	109,95	146,60	–	–	–	–	–	–	–	–	–
2 880	7,24	19,90	38,30	75,39	113,09	150,79	–	–	–	–	–	–	–	–	–
3 000	7,54	20,73	39,90	78,53	117,80	157,07	–	–	–	–	–	–	–	–	–
3 600	9,05	24,88	47,87	94,24	–	–	–	–	–	–	–	–	–	–	–
Nominal torque (Nm)	24	66	127	250	375	500	675	875	1 330	2 325	3 770	6 270	9 325	11 600	14 675
Max torque (Nm)	64	160	318	487	759	1 096	1 517	2 137	3 547	5 642	9 339	16 455	23 508	33 125	42 740

Table 2

Assembled coupling characteristics

Coupling size	Speed	Mass tyre	Inertia	Torsional stiffness	Misalignment			Nominal torque	Torque	Screw size	Clamping screw torque
					Angular	Parallel	Axial				
	Max.								Max.		
–	r/min	kg	kg/m²	Nm/°	°	mm		Nm		–	Nm
40	4 500	0,1	0,00074	5	4	1,1	1,3	24	64	M6	15
50	4 500	0,3	0,00115	13	4	1,3	1,7	66	160	M6	15
60	4 000	0,5	0,0052	26	4	1,6	2,0	127	318	M6	15
70	3 600	0,7	0,009	41	4	1,9	2,3	250	487	M8	24
80	3 100	1,0	0,017	63	4	2,1	2,6	375	759	M8	24
90	3 000	1,1	0,031	91	4	2,4	3,0	500	1 096	M10	40
100	2 600	1,1	0,054	126	4	2,6	3,3	675	1 517	M10	40
110	2 300	1,4	0,078	178	4	2,9	3,7	875	2 137	M10	40
120	2 050	2,3	0,013	296	4	3,2	4,0	1 330	3 547	M12	50
140	1 800	2,6	0,255	470	4	3,7	4,6	2 325	5 642	M12	55
160	1 600	3,4	0,380	778	4	4,2	5,3	3 770	9 339	M16	80
180	1 500	7,7	0,847	1 371	4	4,8	6,0	6 270	16 455	M16	105
200	1 300	8,0	1,281	1 959	4	5,3	6,6	9 325	23 508	M16	120
220	1 100	10,0	2,104	2 760	4	5,8	7,3	11 600	33 125	M20	165
250	1 000	15,0	3,505	3 562	4	6,6	8,2	14 675	42 740	M20	165

Engineering data

Power ratings

Maximum torque figures should be treated as short duration overload ratings occurring in circumstances such as direct-on-line starting.

For speeds not shown, calculate the nominal torque for the design application using the formula below and select a coupling based on the nominal torque ratings.

$$\text{Nominal torque (Nm)} = \frac{\text{Design power (kW)} \times 9\,550}{\text{r/min}}$$

For additional information about SKF Flex Couplings, see **table 1** and **2** on **page 61**.

Order data

A complete SKF Flex coupling consists of: 2 flanges and 1 tyre.

For additional information about ordering a coupling see **table 3**.

Table 3

Order data

Coupling type	Flanges	Qty	Element	Qty	Coupling bushing number	Qty	Spacer flange and shaft[1]	Qty	Spacer bushing number	Qty
RSB both sides	PHE F70RSBFLG	2	PHE F70NRTYRE	1	–	–	–	–	–	–
RSB/F combination	PHE F70RSBFLG PHE F70FTBFLG	1 1	PHE F70NRTYRE or PHE F70FRTYRE	1 –	– PHF TB2012X...MM	– 1	– PHE SM25–...DBSE	– 1	– PHF 2517X...MM	– 1
RSB/H combination	PHE F70RSBFLG PHE F70HTBFLG	1 1	PHE F70NRTYRE or PHE F70FRTYRE	1	– PHF TB1610X...MM	– 1	– PHE SM25–...DBSE	– 1	– PHF 2517X...MM	– 1
F/F Combination	PHE F70FTBFLG PHE F70FTBFLG	1 1	PHE F70NRTYRE or PHE F70FRTYRE	1 –	PHF TB2012X...MM PHF TB2012X...MM	1 1	PHE SM25–...DBSE –	1 –	PHF 2517X...MM –	1 –
H/H Combination	PHE F70HTBFLG PHE F70HTBFLG	1 1	PHE F70NRTYRE or PHE F70FRTYRE	1	PHF TB1610X...MM PHF TB1610X...MM	1 1	PHE SM25–...DBSE –	1 –	PHF 2517X...MM –	1 –
F/H Combination	PHE F70FTBFLG PHE F70HTBFLG	1 1	PHE F70NRTYRE or PHE F70FRTYRE	1	PHF TB1610X...MM PHF TB2012X...MM	1 1	PHE SM25–...DBSE –	1 –	PHF 2517X...MM –	1 –
Reversible	PHE F70RTBFLG	2	PHE F70NRTYRE	1	PHF TB1610X...MM	2	–	–	–	–

[1] To complete designation add distance between shaft ends. PHE SM25-100DBSE.

An SKF Flex coupling consists of 2 flanges and 1 tyre. An SKF Flex Spacer Coupling consists of 2 flanges, 1 tyre and 1 spacer (spacer part number consists of spacer shaft and rigid flange).

Installation

1 All metal components should be cleaned. Be sure to remove the protective coating on the flange bores. The taper bushings should be placed into the flanges and the screws lightly tightened.

2 If internal clamping rings are being used (size 40–60), position them onto the shaft (→ **fig. 1**). Place the flanges next to the clamping ring on each shaft and position them so that dimension M is obtained between the flange faces (→ **table 4**, **page 64**).

Where taper bushings are used, see separate fitting instructions supplied with the taper bushings.

Flanges with external clamping rings (sizes 70–250) should have the clamping rings fitted when installing, engaging only two or three of the threads of each screw at this time. These flanges should be positioned so that M is obtained by measuring the gap between the flange faces.

3 If shaft end float is to occur, locate the shafts at mid-position of end float when checking dimension M. Note that shaft ends may project beyond the faces of the flanges if required. In these cases, allow sufficient space between shaft ends for end float and misalignment.

4 Parallel alignment should be checked by placing a straight edge across the flanges at various points around the circumference (→ **fig. 3**). Angular alignment is checked by measuring the gap between the flanges at several positions around the circumference. Align the coupling as accurately as possible, particularly on high-speed applications.

5 Spread the tyre side walls apart and fit over the coupling flanges, making sure that the tyre beads seat properly on the flanges and clamping rings. To make sure that the tyre sits properly in position, it may be necessary to strike the outside diameter of the tyre with a small mallet (→ **fig. 4**). When the tyre is correctly positioned there, should be a gap between the ends of the tyre as shown in **table 5** on **page 64** (→ **fig. 5**).

6 Tighten clamping ring screws (→ **fig. 6**) alternately and evenly (half turn at a time), working round each flange until the required screw torque is achieved (→ **table 4**, **page 64**).

Fig. 1

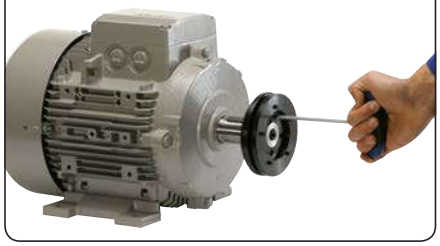

Fig. 2

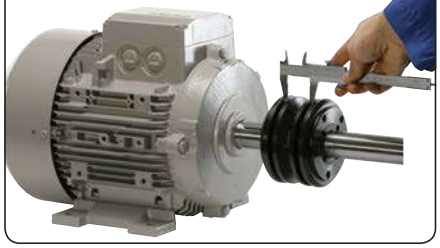

Fig. 3



Fig. 4



Fig. 5

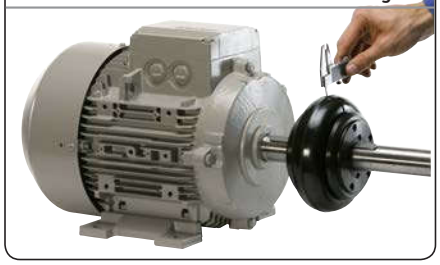

Fig. 6



Table 4

SKF Flex coupling assembly data

Coupling size	M size	Screw size	Clamping screw torque
–	mm	–	Nm
F40[1]	22	M6	15
F50[1]	25	M6	15
F60[1]	33	M6	15
F70	23	M8	24
F80	25	M8	24
F90	27	M10	40
F100	27	M10	40
F110	25	M10	40
F120	29	M12	50
F140	32	M12	55
F160	30	M16	80
F180	46	M16	105
F200	48	M16	120
F220	55	M20	165
F250	59	M20	165

Hexagon socket caphead clamping screws on these sizes

Table 5

SKF Flex coupling tyre gap

Coupling size	Tyre gap
–	mm
F40 to F60	2
F70 to F120	3
F140 and F160	5
F180 to F250	6

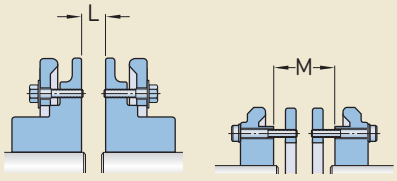

SKF Flex flanges types B, F and H

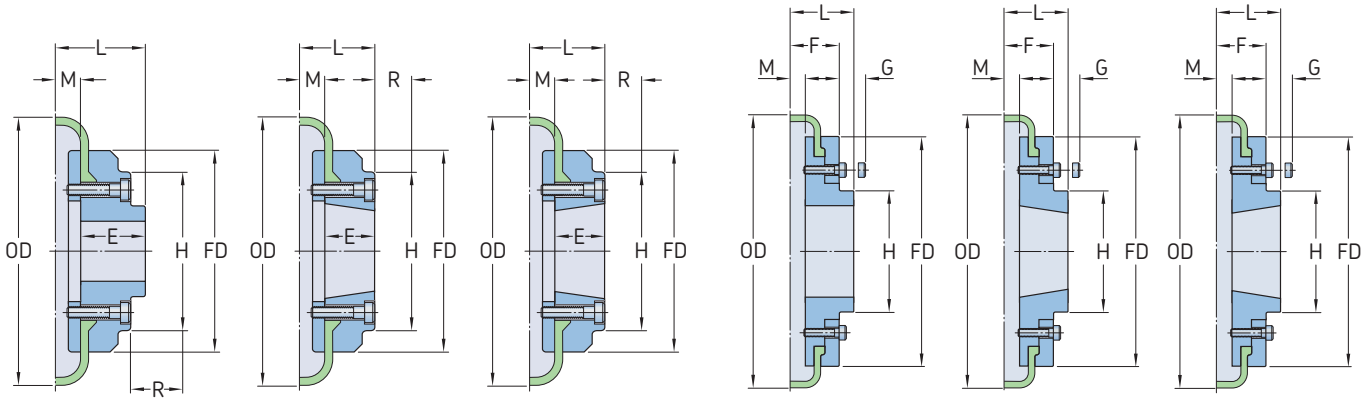

Size 40 to 60

Type B | Type F | Type H

Size 70 to 250

Type B | Type F | Type H

Size	Type	Bushing number	Dimensions Bore		Types F and H		Type B		Key screw							Mass	Inertia	Designation	Tyre designation Natural	F.R.A.S
			Min.	Max.	L	E	L	E		OD	FD	H	F	R[1]	G[2]	M				
mm	–	–	mm													kg	kg/m²	–		
40	B	–	–	30	–	–	33,0	22	M5	104	82	–	–	29	–	11,0	0,80	0,00074	**PHE F40RSBFLG**	**PHE F40NRTYRE**	**PHE F40FRTYRE**
40	F	1008	9	25	33,0	22	–	–	–	104	82	–	–	29	–	11,0	0,80	0,00074	**PHE F40FTBFLG**	**PHE F40NRTYRE**	**PHE F40FRTYRE**
40	H	1008	9	25	33,0	22	–	–	–	104	82	–	–	29	–	11,0	0,80	0,00074	**PHE F40HTBFLG**	**PHE F40NRTYRE**	**PHE F40FRTYRE**
50	B	–	–	38	–	–	45,0	32	M5	133	100	79	–	38	–	12,5	1,20	0,00115	**PHE F50RSBFLG**	**PHE F50NRTYRE**	**PHE F50FRTYRE**
50	F	1210	11	32	37,5	25	–	–	–	133	100	79	–	38	–	12,5	1,20	0,00115	**PHE F50FTBFLG**	**PHE F50NRTYRE**	**PHE F50FRTYRE**
50	H	1210	11	32	37,5	25	–	–	–	133	100	79	–	38	–	12,5	1,20	0,00115	**PHE F50HTBFLG**	**PHE F50NRTYRE**	**PHE F50FRTYRE**
60	B	–	–	45	–	–	55,0	38	M6	165	125	70	–	38	–	16,5	2,00	0,0052	**PHE F60RSBFLG**	**PHE F60NRTYRE**	**PHE F60FRTYRE**
60	F	1610	14	42	41,5	25	–	–	–	165	125	103	–	38	–	16,5	2,00	0,0052	**PHE F60FTBFLG**	**PHE F60NRTYRE**	**PHE F60FRTYRE**
60	H	1610	14	42	41,5	25	–	–	–	165	125	103	–	38	–	16,5	2,00	0,0052	**PHE F60HTBFLG**	**PHE F60NRTYRE**	**PHE F60FRTYRE**
70	B	–	–	60	–	–	47,0	35	M10	187	142	80	50	–	13	11,5	3,10	0,009	**PHE F70RSBFLG**	**PHE F70NRTYRE**	**PHE F70FRTYRE**
70	F	2012	14	50	43,5	32	–	–	–	187	142	80	50	42	13	11,5	3,10	0,009	**PHE F70FTBFLG**	**PHE F70NRTYRE**	**PHE F70FRTYRE**
70	H	1610	14	42	36,5	25	–	–	–	187	142	80	50	38	13	11,5	3,00	0,009	**PHE F70HTBFLG**	**PHE F70NRTYRE**	**PHE F70FRTYRE**
80	B	–	–	63	–	–	55,0	42	M10	211	165	98	54	–	16	12,5	4,90	0,018	**PHE F80RSBFLG**	**PHE F80NRTYRE**	**PHE F80FRTYRE**
80	F	2517	16	60	57,5	45	–	–	–	211	165	97	54	48	16	12,5	4,90	0,018	**PHE F80FTBFLG**	**PHE F80NRTYRE**	**PHE F80FRTYRE**
80	H	2012	14	50	44,5	32	–	–	–	211	165	98	54	32	16	12,5	4,60	0,017	**PHE F80HTBFLG**	**PHE F80NRTYRE**	**PHE F80FRTYRE**
90	B	–	–	75	–	–	62,5	49	M12	235	187	112	60	–	16	13,5	7,10	0,032	**PHE F90RSBFLG**	**PHE F90NRTYRE**	**PHE F90FRTYRE**
90	F	2517	16	60	58,5	45	–	–	–	235	187	108	60	48	16	13,5	7,00	0,031	**PHE F90FTBFLG**	**PHE F90NRTYRE**	**PHE F90FRTYRE**
90	H	2517	16	60	58,5	45	–	–	–	235	187	108	60	48	16	13,5	7,00	0,031	**PHE F90HTBFLG**	**PHE F90NRTYRE**	**PHE F90FRTYRE**
100	B	–	–	80	–	–	69,5	56	M12	254	214	125	62	–	16	13,5	9,90	0,055	**PHE F100RSBFLG**	**PHE F100NRTYRE**	**PHE F100FRTYRE**
100	F	3020	25	75	64,5	51	–	–	–	254	214	120	62	55	16	13,5	9,90	0,055	**PHE F100FTBFLG**	**PHE F100NRTYRE**	**PHE F100FRTYRE**
100	H	2517	16	60	58,5	45	–	–	–	254	214	113	62	48	16	13,5	9,40	0,054	**PHE F100HTBFLG**	**PHE F100NRTYRE**	**PHE F100FRTYRE**
110	B	–	–	90	–	–	75,5	63	M12	279	232	128	62	–	16	12,5	12,50	0,081	**PHE F110RSBFLG**	**PHE F110NRTYRE**	**PHE F110FRTYRE**
110	F	3020	25	75	63,5	51	–	–	–	279	232	134	62	55	16	12,5	11,70	0,078	**PHE F110FTBFLG**	**PHE F110NRTYRE**	**PHE F110FRTYRE**
110	H	3020	25	75	63,5	51	–	–	–	279	232	134	62	55	16	12,5	11,70	0,078	**PHE F110HTBFLG**	**PHE F110NRTYRE**	**PHE F110FRTYRE**
120	B	–	–	100	–	–	84,5	70	M16	314	262	143	67	–	16	14,5	16,90	0,137	**PHE F120RSBFLG**	**PHE F120NRTYRE**	**PHE F120FRTYRE**
120	F	3525	35	100	79,5	65	–	–	–	314	262	140	67	67	16	14,5	16,50	0,137	**PHE F120FTBFLG**	**PHE F120NRTYRE**	**PHE F120FRTYRE**
120	H	3020	25	75	65,5	51	–	–	–	314	262	140	67	55	16	14,5	15,90	0,130	**PHE F120HTBFLG**	**PHE F120NRTYRE**	**PHE F120FRTYRE**
140	B	–	–	125	–	–	110,5	94	M20	3,59	312,5	180	73	–	17	16,0	22,20	0,254	**PHE F140RSBFLG**	**PHE F140NRTYRE**	**PHE F140FRTYRE**
140	F	3525	35	100	81,0	65	–	–	–	359	312,5	180	73	67	17	16,0	22,30	0,255	**PHE F140FTBFLG**	**PHE F140NRTYRE**	**PHE F140FRTYRE**
140	H	3525	35	100	81,0	65	–	–	–	359	312,5	180	73	67	17	16,0	22,30	0,255	**PHE F140HTBFLG**	**PHE F140NRTYRE**	**PHE F140FRTYRE**
160	B	–	–	140	–	–	117,0	102	M20	402	348	197	78	–	19	15,0	35,80	0,469	**PHE F160RSBFLG**	**PHE F160NRTYRE**	**PHE F160FRTYRE**
160	F	4030	40	115	91,0	76	–	–	–	402	348	197	78	80	19	15,0	32,50	0,380	**PHE F160FTBFLG**	**PHE F160NRTYRE**	**PHE F160FRTYRE**
160	H	4030	40	115	91,0	76	–	–	–	402	348	197	78	80	19	15,0	32,50	0,380	**PHE F160HTBFLG**	**PHE F160NRTYRE**	**PHE F160FRTYRE**
180	B	–	–	150	–	–	137,0	114	M20	470	396	205	94	–	19	23,0	49,10	0,871	**PHE F180RSBFLG**	**PHE F180NRTYRE**	**PHE F180FRTYRE**
180	F	4535	55	125	112,0	89	–	–	–	470	396	205	94	89	19	23,0	42,20	0,847	**PHE F180FTBFLG**	**PHE F180NRTYRE**	**PHE F180FRTYRE**
180	H	4535	55	125	112,0	89	–	–	–	470	396	205	94	89	19	23,0	42,20	0,847	**PHE F180HTBFLG**	**PHE F180NRTYRE**	**PHE F180FRTYRE**
200	B	–	–	150	–	–	138,0	114	M20	508	432	205	103	–	19	24,0	58,20	1,301	**PHE F200RSBFLG**	**PHE F200NRTYRE**	**PHE F200FRTYRE**
200	F	4535	55	125	113,0	89	–	–	–	508	432	205	103	89	19	24,0	53,60	1,281	**PHE F200FTBFLG**	**PHE F200NRTYRE**	**PHE F200FRTYRE**
200	H	4535	55	125	113,0	89	–	–	–	508	432	205	103	89	19	24,0	53,60	1,281	**PHE F200HTBFLG**	**PHE F200NRTYRE**	**PHE F200FRTYRE**
220	B	–	–	160	–	–	154,5	127	M20	562	472	224	118	–	20	27,5	79,60	2,142	**PHE F220RSBFLG**	**PHE F220NRTYRE**	**PHE F220FRTYRE**
220	F	5040	70	125	129,5	102	–	–	–	562	472	224	118	92	20	27,5	72,00	2,104	**PHE F220FTBFLG**	**PHE F220NRTYRE**	**PHE F220FRTYRE**
220	H	5040	70	125	129,5	102	–	–	–	562	472	224	118	92	20	27,5	72,00	2,104	**PHE F220HTBFLG**	**PHE F220NRTYRE**	**PHE F220FRTYRE**
250	B	–	–	190	–	–	161,5	132	M20	628	532	254	125	–	25	29,5	104,00	3,505	**PHE F250RSBFLG**	**PHE F250NRTYRE**	**PHE F250FRTYRE**

[1] Is the clearance required to allow tightening of the clamping screws and the tapered bushing. Use of a shortened wrench will reduce this dimension.
[2] The amount by which the clamping screws need to be withdrawn to release the tyre.
For coupling sizes 70, 80, 100 and 120 "F" flanges require a larger bushing than "H" flanges.
Mass and inertia figures are for a single flange with midrange bore and include clamping ring, screws, washers and half tyre.

SKF Flex Spacer Coupling

The SKF Flex coupling spacer is used to join two shaft ends that cannot be positioned close enough to just use a coupling alone.

The spacer also allows removal of a shaft without the need to move either the driving or the driven machine. For example, this allows easy and fast replacement of impellers in pump applications.

Installation

1 Place each tapered bushing in the correct flange and tighten the screws lightly.

2 If keys are being used, side fitting keys with top clearance should be used.

3 Use a straight edge to align the face of the clamping ring for coupling sizes F40–F60 (→ **fig. 1a**) or the flange for coupling sizes F70–F250 (→ **fig. 1b**) with the shaft end. A dial indicator can be used to check that the runout of the spacer flange is within limits indicated in **fig. 1a** and **b**.

Position the SKF Flex flange on the spacer flange shaft to dimension "Y" shown in **table 7** and secure it with a tapered bushing. This will allow for "M" and DBSE dimensions (→ **fig. 1c**) to be maintained when assembling. If necessary, the distance between shaft ends (DBSE) may be extended. The maximum DBSE possible is achieved when the spacer shaft end and driven shaft end are flush with the face of their respective tapered bushings.

4 Position the spacer sub-assembly in line with the spacer flange (→ **fig. 1d**), engage spigot align holes and insert screws. The torque values are given in **table 8**. Spread the tyre side walls apart and fit over the coupling flanges making sure that the tyre beads seat properly on the flanges and clamping rings.

To make sure that the tyre sits properly in position, it may be necessary to strike the outside diameter of the tyre with a small mallet. When the tyre is correctly positioned, there should be a gap between the ends of the tyre as shown in **table 5**.

5 Tighten the clamping ring screws alternately and evenly (half turn at a time), working around each flange until the required screw torque is achieved, as indicated in **table 8**.

To dismantle

1 Place a support underneath the spacer sub-assembly to prevent it from falling.

2 Remove clamping ring screws evenly (half turn per screw at a time) to prevent the clamping rings from distorting.

3 When the clamping rings are loose, remove the tyre. Then remove the remaining screws and spacer.

Fig. 1

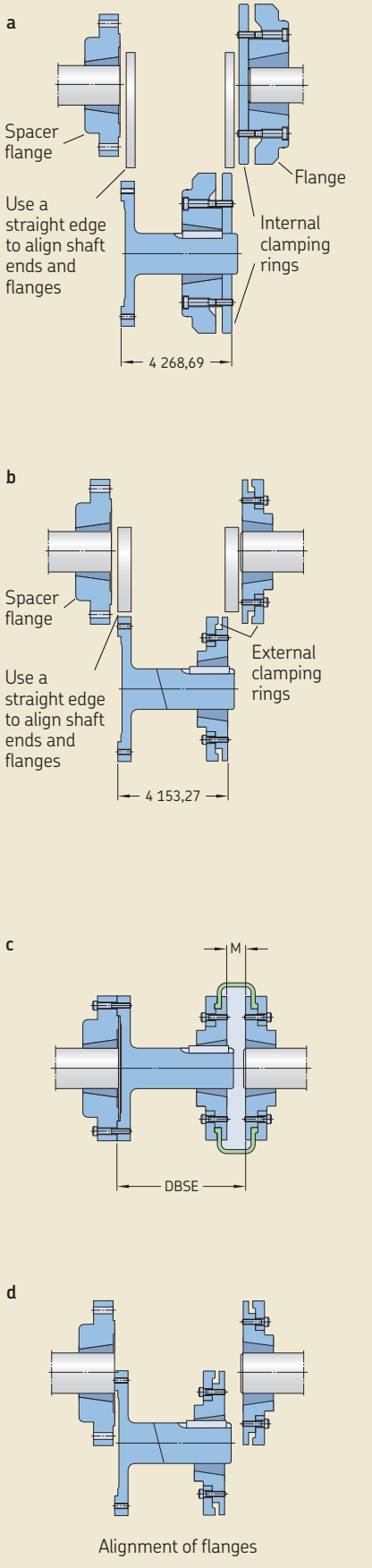

Alignment of flanges

Table 6

Additional dimensions

Coupling size	Distance between shaft ends (DBSE) Nominal Min.	Nominal Max.	Spacer bushing size	Bore Min.	Max.	Coupling bushing size	Bore Min.	Max.	Designation
mm	–		–	–		–	–		–
40	80	90	1 210	11	32	1 008	9	25	**PHE SM12–80DBSE**
40	100	110	1 210	11	32	1 008	9	25	**PHE SM12–100DBSE**
40	100	113	1 615	14	42	1 008	9	25	**PHE SM16–100DBSE**
40	140	150	1 615	14	42	1 008	9	25	**PHE SM16–140DBSE**
50	100	116	1 615	14	42	1 210	11	32	**PHE SM16–100DBSE**
50	140	156	1 615	14	42	1 210	11	32	**PHE SM16–140DBSE**
60	100	124	1 615	14	42	1 610	14	42	**PHE SM16–100DBSE**
60	140	164	1 615	14	42	1 610	14	42	**PHE SM16–140DBSE**
70	100	114	2 517	16	60	2 012	14	50	**PHE SM25–100DBSE**
70	140	154	2 517	16	60	2 012	14	50	**PHE SM25–140DBSE**
70	180	194	2 517	16	60	2 012	14	50	**PHE SM25–180DBSE**
80	100	117	2 517	16	60	2 517	16	60	**PHE SM25–100DBSE**
80	140	157	2 517	16	60	2 517	16	60	**PHE SM25–140DBSE**
80	180	197	2 517	16	60	2 517	16	60	**PHE SM25–180DBSE**
90	140	158	2 517	16	60	2 517	16	60	**PHE SM25–140DBSE**
90	180	198	2 517	16	60	2 517	16	60	**PHE SM25–180DBSE**
100	140	158	3 020	25	75	3 020	25	75	**PHE SM30–140DBSE**
100	180	198	3 020	25	75	3 020	25	75	**PHE SM30–180DBSE**
110	140	156	3 020	25	75	3 020	25	75	**PHE SM30–140DBSE**
110	180	196	3 020	25	75	3 020	25	75	**PHE SM30–180DBSE**
120	140	160	3 525	35	100	3 525	35	100	**PHE SM35–140DBSE**
120	180	200	3 525	35	100	3 525	35	100	**PHE SM35–180DBSE**
140	140	163	3 525	35	100	3 525	35	100	**PHE SM35–140DBSE**
140	180	203	3 525	35	100	3 525	35	100	**PHE SM35–180DBSE**

Table 7

Additional assembly data

Size	"Y" for nominal DBSE 100	140	180
–	mm		
40	83	123	–
50	82	122	–
60	75	115	155
70	76	116	156
80	74	114	154
90	111	151	–
100	111	151	–
110	115	155	–
120	111	151	–
140	104	144	–

Table 8

Clamping screw torque

Size	Screw size	Torque
–	–	Nm
40	83	123
50	82	122
60	75	115
70	76	116
80	74	114
90	111	151
100	111	151
110	115	155
120	111	151
140	104	144

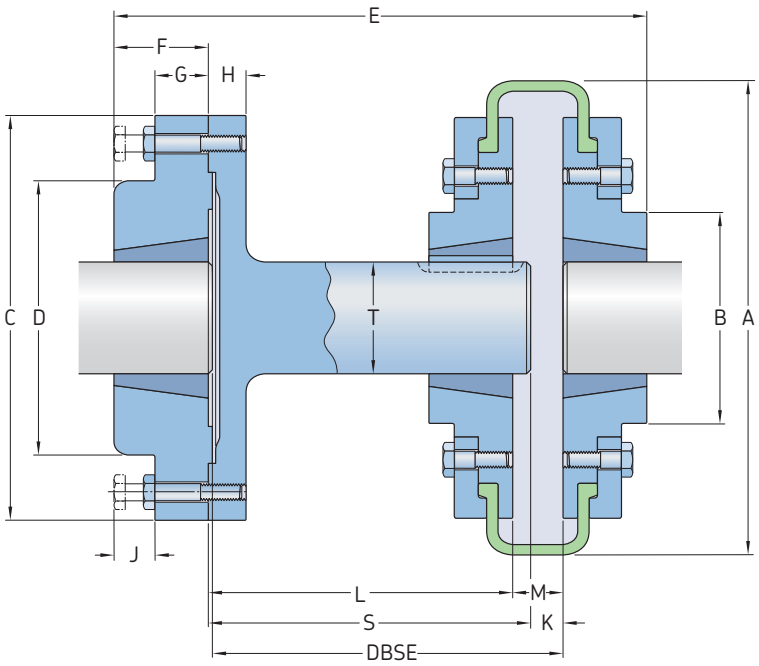

Coupling size	Dimensions														Designation
	A	B	C	D	E	F	G	H	J	K	L	M	S	T	
mm	mm														–
40	104	82	118	83	134	25	14	15	14	6	65	22	77	25	**PHE SM12–80DBSE**
40	104	82	118	83	140	25	14	15	14	22	77	22	77	25	**PHE SM12–100DBSE**
40[1]	104	82	127	80	157	38	18	15	14	9	88	22	94	32	**PHE SM16–100DBSE**
40[1]	104	82	127	80	187	38	18	15	14	9	128	22	134	32	**PHE SM16–140DBSE**
50	133	79	127	80	160	38	18	15	14	9	85	25	94	32	**PHE SM16–100DBSE**
50	133	79	127	80	200	38	18	15	14	9	125	25	134	32	**PHE SM16–140DBSE**
60	165	103	127	80	161	38	18	15	14	9	78	33	94	32	**PHE SM16–100DBSE**
60	165	103	127	80	201	38	18	15	14	9	118	33	134	32	**PHE SM16–140DBSE**
70[2]	187	80	178	123	180	45	22	16	14	9	80	23	94	48	**PHE SM25–100DBSE**
70[2]	187	80	178	123	220	45	22	16	14	9	120	23	174	48	**PHE SM25–140DBSE**
70[2]	187	80	178	123	260	45	22	16	14	9	160	23	174	48	**PHE SM25–180DBSE**
80	211	95	178	123	193	45	22	16	14	9	78	25	94	48	**PHE SM25–100DBSE**
80	211	95	178	123	233	45	22	16	14	9	118	25	134	48	**PHE SM25–140DBSE**
80	211	95	178	123	273	45	22	16	14	9	158	25	174	48	**PHE SM25–180DBSE**
90	235	108	178	123	233	45	22	16	14	9	116	27	134	48	**PHE SM25–140DBSE**
90	235	108	178	123	273	45	22	16	14	9	156	27	174	48	**PHE SM25–180DBSE**
100	254	120	216	146	245	51	29	20	17	9	116	27	134	60	**PHE SM30–140DBSE**
100	254	120	216	146	285	51	29	20	17	9	156	27	174	60	**PHE SM30–180DBSE**
110	279	134	216	146	245	51	29	20	17	9	118	25	134	60	**PHE SM30–140DBSE**
110	279	134	216	146	285	51	29	20	17	9	158	25	174	60	**PHE SM30–180DBSE**
120	314	140	248	178	272	63	34	20	17	9	114	29	134	80	**PHE SM35–140DBSE**
120	314	140	248	178	312	63	34	20	17	9	154	29	174	80	**PHE SM35–180DBSE**
140	359	178	248	178	271	63	34	20	17	9	111	27	134	80	**PHE SM35–140DBSE**
140	359	178	248	178	312	63	34	20	17	9	151	27	174	80	**PHE SM35–180DBSE**

[1] "B" Flange must be used to fit spacer shaft
[2] "F" Flange must be used to fit spacer shaft

SKF Chain Couplings

Chain couplings are able to transmit higher torque than their shafts, making them ideal for high torque applications. Available with a pilot bore, finished bore or taper bushing (face or hub), flanges are linked together with duplex roller chains enabling them to accommodate up to 2° of misalignment.

To help provide maximum service life and reliability, particularly for high speed applications, SKF recommends fitting all chain couplings with a cover and lubricating them properly. If a chain coupling is to be subjected to reversing operations, shock or pulsating loads, or other severe operating conditions, select a coupling one size larger than normal.

Selection

Standard selection method

This selection procedure can be used for most motor, turbine, or engine driven applications. The following information is required to select an SKF chain coupling:

- Torque – power [kW]
- Input speed [r/min]
- Type of equipment and application
- Shaft diameters
- Physical space limitations
- Special bore or finish requirements

1 Service factor
Determine the service factor from **tables 9** and **10** on **pages 87** and **88**.

2 Design power
Determine the required minimum design power as shown below:

Design power = Service factor × normal running power [kW]

Using **table 2** on **page 70**, search for the appropriate speed until a power rating greater than the design power is found. The required chain coupling size is listed at the head of the table.

3 Size
Select the appropriate coupling from the product table on **page 72** and check that chosen flanges can accommodate both driven and driving shafts.

4 Other considerations
Possible other restrictions might be speed [r/min], bore and dimensions.

Example

Select a coupling to connect a 30 kW, 1 500 r/min electric motor driving a boiler feed pump. The motor shaft diameter is 55 mm and the pump shaft diameter 45 mm. Shaft extensions are 140 mm and 110 mm respectively. The selection is replacing a gear type coupling.

1 Service factor
From **table 9** on **page 87** = 1,50

2 Required design power:
1,5 × 30 kW = 45 kW

3 Coupling size
Look under 1 500 r/min in **table 2** on **page 70** and choose the first power figure which exceeds the required 45 kW. This is 95,2 kW of coupling size 1218.

By referring to the product table on **page 72**, it can be seen that both shaft diameters fall within the bore range available.

4 Other considerations
The speed capacity of 3 000 r/min (coupling size 1218) exceeds the required speed of 1 500 r/min. The maximum bore capacity of 62 mm exceeds the required shaft diameters of 55 mm and 45 mm. The resulting service factor is 2,11. This will provide a very good service life for the coupling and a high level of reliability.

Table 1

Coupling covers

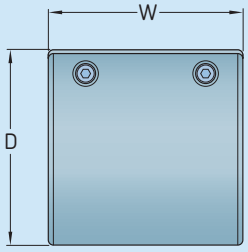

Cover size	Aluminum D	Aluminum W	Weight	Plastic D	Plastic W	Weight
–	mm		kg	mm		kg
IS0816[1]	102	51	0,42	102	59	0,9
IS1016[1]	130	60	0,59	130	67	1,32
IS1018[1]	130	60	0,59	130	67	1,32
IS1218[1]	162	75	1,20	175	78	1,98
IS1220[1]	162	75	1,20	175	78	1,98
IS1222[1]	208	102	1,45	175	78	2,22
IS1618[1]	208	102	1,45	210	106	2,22
IS1620[1]	208	102	1,45	210	106	2,22
IS2018	257	133	4,80	238	151	3,97
IS2020	257	133	4,80	257	133	5,74
IS2418	289	187	8,10	289	187	7,47
IS2422	337	202	9,20	337	202	8,85

[1] Will be supplied in plastic unless otherwise specified.

Engineering data

Power ratings

Maximum torque figures should be treated as short duration overload ratings occurring in circumstances such as direct-on-line starting.

For speeds not shown, calculate the nominal torque for the application using the following formula and select a coupling according to nominal torque ratings.

$$\text{Nominal torque (Nm)} = \frac{\text{Design power (kW)} \times 9\,550}{\text{r/min}}$$

For additional information about chain couplings, such as chain cover data, please refer to **table 1** and **2**.

Table 2

Power ratings

Size	Torque	r/min	Bore		kW ratings at given r/min																	
					1	5	10	25	50	100	200	300	400	500	600	800	1 000	1 200	2 500	3 000	3 600	4 000	4 800
	Max.	Max.	Min.	Max.																		
–	Nm	r/min	mm		kW																	
0816	386	5 000	16	24	0,04	0,21	0,41	1,03	2,06	3,09	4,69	6,17	7,41	8,85	10,1	12,5	15,3	17,3	31,9	37,0	43,0	46,9	54,9
1016	735	4 000	16	43	0,08	0,39	0,78	1,95	3,91	5,86	8,92	11,7	14,1	16,8	19,2	23,8	28,9	32,9	60,6	70,4	81,6	–	–
1018	931	3 600	19	51	0,10	0,50	0,99	2,48	4,95	7,43	11,3	14,9	17,8	21,3	24,4	30,1	36,6	41,6	76,8	89,2	–	–	–
1218	1 750	3 000	25,5	62	0,18	0,93	1,87	4,67	9,33	14,0	21,3	28,0	33,6	40,1	45,9	56,8	69,1	78,4	145	–	–	–	–
1220	2 060	2 500	28,5	70	0,21	1,08	2,17	5,42	10,82	16,2	24,7	32,5	38,0	46,5	53,2	65,9	80,2	90,9	168,2	–	–	–	–
1222	2 370	2 500	28,5	76	0,25	1,25	2,51	6,31	12,5	18,8	28,6	37,7	45,3	54,1	61,9	76,5	93,1	105	195	–	–	–	–
1618	3 880	2 000	28,5	80	0,41	2,07	4,14	10,3	20,7	31,0	47,2	62,1	74,5	89,0	101	126	153	174	–	–	–	–	–
1620	5 580	2 000	38	91	0,48	2,44	4,89	12,2	24,4	36,6	55,7	73,3	87,9	105,0	119,2	148,7	180,5	205,3	–	–	–	–	–
2018	7 180	1 800	38	98,5	0,62	3,13	6,25	15,6	31,3	46,8	71,3	93,8	112,5	134,4	152,6	190,3	231,1	262,8	–	–	–	–	–
2020	8 780	1 800	38	117,5	0,93	4,66	9,33	23,3	46,6	70,0	106	140	168	200	229	283	345	392	–	–	–	–	–
2418	13 200	1 500	51	119	1,40	7,02	14,0	35,1	70,2	105	160	210	252	302	345	426	519	590	–	–	–	–	–
2422	17 100	1 200	51	156	1,81	9,07	18,1	45,3	90,7	136	206	272	326	390	446	551	671	762	–	–	–	–	–

Table 3

Order data

Size	Hub								Chain		Covers	
	Plain bore	Qty	FTB[1]	Qty	HTB[1]	Qty	Bored to size[2]	Qty		Qty		Qty
0816	PHE IS0816RSB	2 and/or	PHE IS0816FTB	2 and/or	PHE IS0816HTB	2 and/or	PHE IS0816X...	2	PHE IS0816CHN	1	PHE IS0816COVER	1
1016	PHE IS1016RSB	2 and/or	–	2 and/or	–	2 and/or	PHE IS1016X...	2	PHE IS1016CHN	1	PHE IS1016COVER	1
1018	PHE IS1018RSB	2 and/or	PHE IS1018FTB	2 and/or	PHE IS1018HTB	2 and/or	PHE IS1018X...	2	PHE IS1018CHN	1	PHE IS1018COVER	1
1218	PHE IS1218RSB	2 and/or	–	2 and/or	–	2 and/or	PHE IS1218X...	2	PHE IS1218CHN	1	PHE IS1218COVER	1
1220	PHE IS1220RSB	2 and/or	PHE IS1220FTB	2 and/or	PHE IS1220HTB	2 and/or	PHE IS1220X...	2	PHE IS1220CHN	1	PHE IS1220COVER	1
1222	PHE IS1222RSB	2 and/or	–	2 and/or	–	2 and/or	PHE IS1222X...	2	PHE IS1222CHN	1	PHE IS1222COVER	1
1618	PHE IS1618RSB	2 and/or	–	2 and/or	–	2 and/or	PHE IS1618X...	2	PHE IS1618CHN	1	PHE IS1618COVER	1
1620	PHE IS1620RSB	2 and/or	PHE IS1620FTB	2 and/or	PHE IS1620HTB	2 and/or	PHE IS1620X...	2	PHE IS1620CHN	1	PHE IS1620COVER	1
2018	PHE IS2018RSB	2 and/or	–	2 and/or	–	2 and/or	PHE IS2018X...	2	PHE IS2018CHN	1	PHE IS2018COVER	1
2020	PHE IS2020RSB	2 and/or	PHE IS2020FTB	2 and/or	PHE IS2020HTB	2 and/or	PHE IS2020X...	2	PHE IS2020CHN	1	PHE IS2020COVER	1
2418	PHE IS2418RSB	2 and/or	–	2 and/or	–	2 and/or	PHE IS2418X...	2	PHE IS2418CHN	1	PHE IS2418COVER	1
2422	PHE IS2422RSB	2 and/or	–	2 and/or	–	2 and/or	PHE IS2422X...	2	PHE IS2422CHN	1	PHE IS2422COVER	1

[1] Following chain coupling taper bushing assembly configurations are possible: 2 hubs HTB or 2 hubs FTB or 1 hub HTB and 1 hub FTB.
[2] To complete bored to size designation, add bore size. For example: PHE IS1016X22MM designates hub size IS1016 with a 22 mm bore.

Order data

A complete chain coupling consists of:
2 hubs, 1 chain and 1 cover.

For additional information about ordering specific couplings, refer to **table 3**.

Installation

1 Cleaning
Clean all metal parts using non-flammable solvent and check hubs, shafts and keyways for burrs and remove if necessary. Mount the oil seal rings on the sprocket hubs. Install the sprocket hubs flush with the end of the shafts (→ **fig. 1**).

2 Gap and angular alignment
Measure the gap at various intervals and adjust to the "C" dimension specified in the product table on **page 72**. The measurement must not exceed a difference between points of more than 1° which is the allowable angular misalignment.

3 Offset alignment
Align the two hubs so that a straight edge rests squarely on both hubs (→ **fig. 2**). Repeat this at 90° intervals. Clearance must not exceed allowable offset misalignment of 2% of the chain pitch. Tighten all foundation bolts and repeat steps 2 and 3. Realign the coupling if necessary.

4 Lubrication
Lubricate the chain with grease. Wrap the chain around the two sprocket hubs and fix with the pin (→ **fig. 3**). Fill the cover halves with grease and insert the gaskets, install the cover and the installation is complete (→ **fig. 4**).

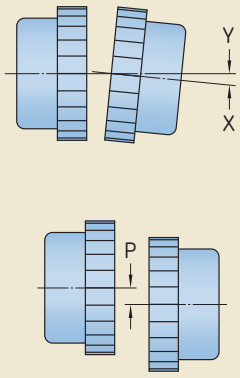

Fig. 1

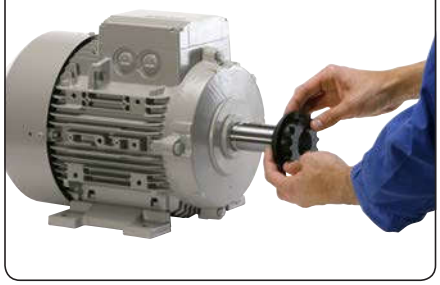

Fig. 2



Fig. 3

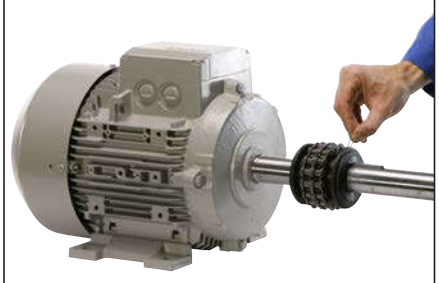

Fig. 4

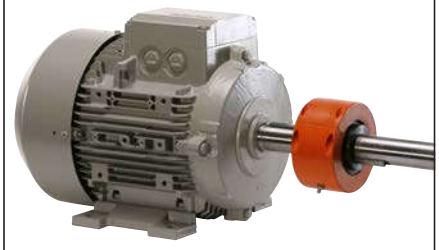

Bored-to-size and taper bushing types FTB and HTB

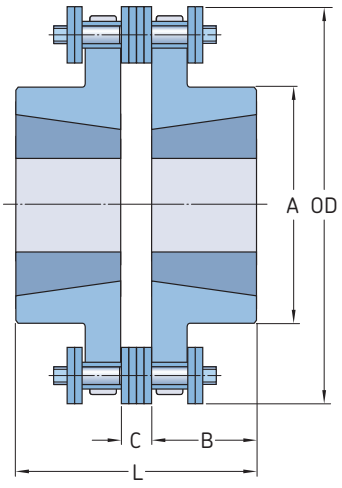

Assembly configuration HH

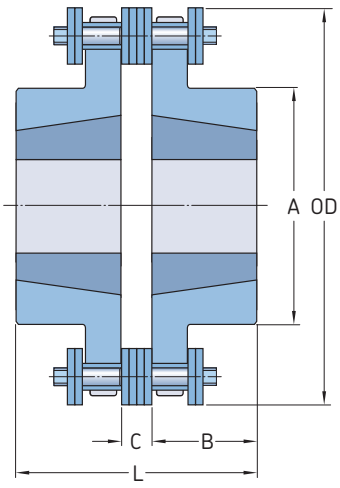

Assembly configuration FF

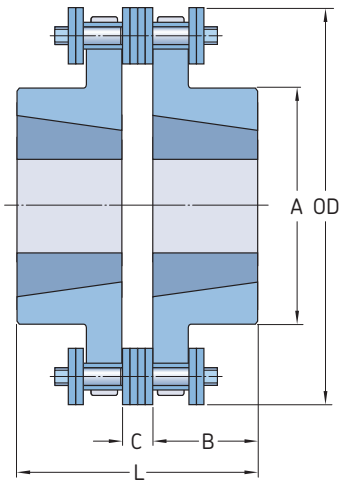

Assembly configuration FH

Coupling size	Bushing number	Bore		Dimensions					Weight	Speed	Nominal torque	Chain weight	Hub designation Plain bore	FTB	HTB	Bored to size
				A	B	C	L	OD								
		Min.	Max.							Max.						
–	–	mm		mm					kg	r/min	Nm	kg	–			
0816	– 1108	15,9 12,7	23,8 28,6	50,0 50,0	28,96 22,2	7,1 7,1	65,0 51,6	77,0 77,0	0,45 0,41	5 000 5 000	294 294	0,23 0,23	**PHE IS0816RSB** **–**	– PHE IS0816FTB	– PHE IS0816HTB	PHE IS0816X... –
1016	–	15,9	42,9	63,5	36,88	9,5	83,3	96,0	1,00	4 000	559	0,54	**PHE IS1016RSB**	–	–	PHE IS1016X...
1018	– 1610	19,1 12,7	50,8 41,3	75,4 75,4	43,26 25,4	9,5 9,5	87,1 60,3	106,4 106,4	1,59 0,50	3 600 3 600	706 706	0,59 0,59	**PHE IS1018RSB** **–**	– PHE IS1018FTB	– PHE IS1018HTB	PHE IS1018X... –
1218	–	25,4	61,9	88,9	47,60	11,1	106,3	127,0	2,27	3 000	1 333	1,00	**PHE IS1218RSB**	–	–	PHE IS1218X...
1220	– 2012	28,6 12,7	69,9 50,8	98,4 98,4	50,80 31,8	11,1 11,1	112,7 74,6	139,7 139,7	2,95 1,23	2 500 2 500	1 559 1 559	1,18 1,18	**PHE IS1220** **–**	– PHE IS1220FTB	– PHE IS1220HTB	PHE IS1220X... –
1222	–	28,6	76,2	114,3	54,00	11,1	119,1	151,2	4,31	2 500	1 794	1,23	**PHE IS1222RSB**	–	–	PHE IS1222X...
1618	–	28,6	79,4	115,9	60,70	14,7	136,1	169,1	4,99	2 000	2 961	2,40	**PHE IS1618RSB**	–	–	PHE IS1618X...
1620 **1620**	– 3020	38,1 23,8	90,5 76,2	136,5 136,5	66,10 50,0	14,7 14,7	146,9 116,3	185,3 185,3	7,40 2,77	2 000 2 000	3 579 3 579	2,68 2,68	**PHE IS1620RSB**	– PHE IS1620FTB	– PHE IS1620HTB	PHE IS1620X... –
2018	–	38,1	98,4	144,5	70,90	18,3	160,1	211,5	9,21	1 800	4 981	4,45	**PHE IS2018RSB**	–	–	PHE IS2018X...
2020 **2020**	– 3535	38,1 30,2	117,5 88,9	170,7 170,7	79,80 88,9	18,3 18,3	177,9 196,1	231,8 231,8	14,43 8,62	1 800 1800	6 688 6 688	4,95 4,95	**PHE IS2020RSB** **–**	– PHE IS2020FTB	– PHE IS2020HTB	PHE IS2020X... –
2418	–	50,8	119,1	171,5	88,30	21,8	198,4	254,0	16,70	1 500	10 032	7,85	**PHE IS2418RSB**	–	–	PHE IS2418X...
2422	–	50,8	155,6	222,3	102,10	21,8	226,0	302,0	31,76	1 200	12 993	9,62	**PHE IS2422RSB**	–	–	PHE IS2422X...

SKF FRC Couplings

With a higher load capacity than jaw couplings and maintenance-free operation, FRC couplings are designed as a general purpose coupling. They are able to cushion moderate shock loads, dampen low levels of vibration and accommodate incidental misalignment. FRC couplings offer a range of hubs and elements to select, to meet the demand for low cost, general purpose flexible coupling.

FRC couplings are phosphate coated for improved corrosion resistance and available with fire-resistant and anti-static elements (F.R.A.S.) FRC couplings are available with a pilot bore, finished bore or taper bushing (face or hub) to make installation quick and simple.

Fully machined outside surfaces allow alignment with a simple straight edge. Shaft connections are "fail safe" due to their interlocking jaw design.

Selection

1 Service factor
Determine the required service factor from **tables 9** and **10** on **pages 87** and **88**.

2 Design power
Multiply normal running power by the service factor. This gives the design power for coupling selection.

3 Coupling size
Using FRC **table 1** to find the speed rating for a coupling that has a power that is greater than the design power. The required FRC coupling is listed at the head of the column.

4 Bore size
Using the FRC product table on **page 76**, check that the selected flanges can accommodate both the drive and driven shafts.

Example

An FRC coupling is required to transmit 15 kW from an electric motor running at 500 r/min to a rotary pump for 15 hours per day. The shaft diameter of the motor is 25 mm and the shaft diameter of the pump is 20 mm.

1 Service factor
From **table 9** on **page 87** = 1,75.

2 Design power
15 × 1,75 = 26,25 kW

Table 1

Power ratings

Speed	Coupling size 70	90	110	130	150	180	230	280
r/min	kW							
50	0,16	0,42	0,84	1,65	3,14	4,97	10,47	16,49
100	0,33	0,84	1,68	3,3	6,28	9,95	20,94	32,98
200	0,66	1,68	3,35	6,6	12,57	19,9	41,88	65,97
300	0,99	2,51	5,03	9,9	18,85	29,84	62,83	98,95
400	1,32	3,35	6,7	13,19	25,13	39,79	83,77	131,94
500	1,65	4,19	8,38	16,49	31,41	49,74	104,71	164,92
600	1,98	5,03	10,05	19,79	37,7	59,69	125,65	197,91
700	2,31	5,86	11,73	23,09	43,98	69,63	146,6	230,89
720	2,37	6,03	12,06	23,75	45,24	71,62	150,79	237,49
800	2,64	6,7	13,4	26,39	50,26	79,58	167,54	263,87
900	2,97	7,54	15,08	29,69	56,54	89,53	188,48	296,86
960	3,17	8,04	16,08	31,66	60,31	95,5	201,05	316,65
1 000	3,3	8,38	16,75	32,98	62,83	99,48	209,42	329,84
1 200	3,96	10,05	20,1	39,58	75,39	119,37	251,31	395,81
1 400	4,62	11,73	23,46	46,18	87,96	139,27	293,19	461,78
1 440	4,75	12,06	24,13	47,5	90,47	143,25	301,57	474,97
1 600	5,28	13,4	26,81	52,77	100,52	159,16	335,08	527,75
1 800	5,94	15,08	30,16	59,37	113,09	179,06	376,96	593,72
2 000	6,6	16,75	33,51	65,97	125,65	198,95	418,85	659,69
2 200	7,26	18,43	36,86	72,57	138,22	218,85	460,73	725,65
2 400	7,92	20,1	40,21	79,16	150,79	238,74	502,62	–
2 600	8,58	21,78	43,56	85,76	163,35	258,64	544,5	–
2 800	9,24	23,46	46,91	92,36	175,92	278,53	–	–
2 880	9,5	24,13	48,25	94,99	180,94	286,49	–	–
3 000	9,9	25,13	50,26	98,95	188,48	298,43	–	–
3 600	11,87	30,16	60,31	118,74	226,18	–	–	–
Nominal torque Nm	31	80	160	315	600	950	2 000	3 150
Max. torque Nm	72	180	360	720	1 500	2 350	5 000	7 200

3 Coupling size
Search for 500 r/min in **table 1** on **page 73** and choose the first power figure which exceeds the required 26,25 kW. This is 31,41 kW of coupling size 150.

4 Bore size
By referring to product table on **page 76**, it can be seen that both shaft diameters fall within the bore range available.

Engineering data

Power ratings

Maximum torque figures should be treated as short duration overload ratings occurring in circumstances such as direct-on-line starting.

For speeds not shown, calculate the nominal torque for the design application using the formula below and select a coupling based on the nominal torque rating.

$$\text{Nominal torque (Nm)} = \frac{\text{Design power (kW)} \times 9\,550}{\text{r/min}}$$

For additional information on FRC couplings, refer to **tables 1** and **2**.

Order data

A complete FRC coupling consists of:
2 hubs and 1 element.

For more detailed information on ordering specific couplings, refer to **table 3**.

Table 2

Assembled dimensions and charachteristics

Size	Assembled length comprising flange types			Mass[1]	Inertia	Torsional stiffness	Misalignment			Nominal torque	Torque
	FF, FH, HH	FB, HB	BB				Angular	Parallel	Axial		Max.
–	mm			kg	kg/m²	Nm/°	°	mm		Nm	–
70	65,0	65,0	65,0	1,00	0,00085	–	1	0,3	0,2	31,5	72
90	69,5	76,0	82,5	1,17	0,00115	–	1	0,3	0,5	80	180
110	82,0	100,5	119,0	5,00	0,0040	65	1	0,3	0,6	160	360
130	89,0	110,0	131,0	5,46	0,0078	130	1	0,4	0,8	315	720
150	107,0	129,5	152,0	7,11	0,0181	175	1	0,4	0,9	600	1 500
180	142,0	165,5	189,0	16,60	0,0434	229	1	0,4	1,1	950	2 350
230	164,5	202,0	239,5	26,00	0,1207	587	1	0,5	1,3	2 000	5 000
280	207,5	246,5	285,5	50,00	0,4465	1025	1	0,5	1,7	3 150	7 200

[1] Mass is for an FF, FH or HH coupling with mid range tapered bushings.

Table 3

Order data

Coupling type	Flanges	Qty	Element	Qty	Taper bushing	Qty
RSB both sides	PHE FRC70RSB	2	PHE FRC70NR or	1	–	–
	–	–	PHE FRC70FR	–	–	–
RSB/F Combination	PHE FRC70RSB	1	PHE FRC70NR or	1	PHF TB1008X...MM	1
	PHE FRC70FTB	1	PHE FRC70FR	–	–	
RSB/H Combination	PHE FRC70RSB	1	PHE FRC70NR or	1	PHF TB1008X...MM	1
	PHE FRC70HTB	1	PHE FRC70FR	–	–	
F/F Combination	PHE FRC70FTB	1	PHE FRC70NR or	1	PHF TB1008X...MM	1
	PHE FRC70FTB	1	PHE FRC70FR	–	PHF TB1008X...MM	1
H/H Combination	PHE FRC70HTB	1	PHE FRC70NR or	1	PHF TB1008X...MM	1
	PHE FRC70HTB	1	PHE FRC70FR	–	PHF TB1008X...MM	1
F/H Combination	PHE FRC70FTB	1	PHE FRC70NR or	1	PHF TB1008X...MM	1
	PHE FRC70HTB	1	PHE FRC70FR		PHF TB1008X...MM	1

NR = Natural rubber
FR = Fire-resistant and anti-static (FRAS)

Installation

1 Place the couplings on their shafts so that shaft ends do not protrude into the internal section of the coupling. Then tighten the screws on the taper bushing to the torque values listed in the mounting instructions (→ **fig. 1**).

2 Insert the coupling element into one side of the coupling (→ **fig. 2**).

3 Move the other coupling into position and connect the two halves (→ **fig. 4**). Check that the assembled length is correct (→ **fig. 5**).

4 Check angular misalignment by measuring the assembled length in four positions at 90° around the coupling. Then check for parallel misalignment using a straight edge across the length of the coupling flange (→ **fig. 6**). Allowable angular misalignment for all FRC couplings is 1°. Allowable parallel misalignment for FRC couplings is based on size (→ **table 4**).

Note: For the most consistent results, check across at least 3 of the 6 points where the rubber elements are visible between the flanges.

Table 4

Allowable parallel misalignment

Coupling size	
–	mm
FRC70 to 110	0,3
FRC130 to 180	0,4
FRC230 to 280	0,5

Fig. 1

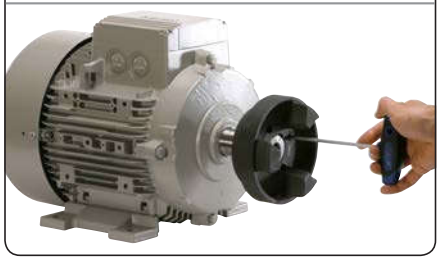

Fig. 2



Fig. 3



Fig. 4



Fig. 5



Fig. 6



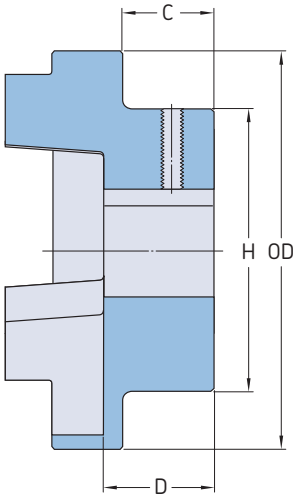

Type B

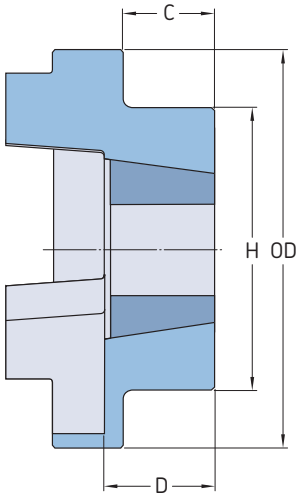

Type F

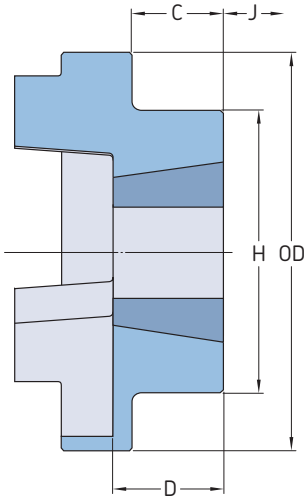

Type H

Coupling size	Dimensions													Hub designation		
	OD	H	Type F, H Bushing size	Bore		C	D	J[1]	Type B Bore Max	Pilot	Key screw	C	D	Type F	Type H	Type B Pilot bore
				Min.	Max.											
–	mm													–		
70	69	60	1 008	9	25	20	23,5	29	32	10	M6	20	25,8	**PHE FRC70FTB**	**PHE FRC70HTB**	**PHE FRC70RSB**
90	85	70	1 108	9	28	19,5	23,5	29	38	10	M6	26	30,0	**PHE FRC90FTB**	**PHE FRC90HTB**	**PHE FRC90RSB**
110	112	100	1 610	14	42	18,5	26,5	38	55	10	M10	37	45,3	**PHE FRC110FTB**	**PHE FRC110HTB**	**PHE FRC110RSB**
130	130	105	1 610	14	42	18	26,5	38	60	20	M10	39	47,5	**PHE FRC130FTB**	**PHE FRC130HTB**	**PHE FRC130RSB**
150	150	115	2 012	14	50	23,5	33,5	42	70	28	M10	46	60,0	**PHE FRC150FTB**	**PHE FRC150HTB**	**PHE FRC150RSB**
180	180	125	2 517	16	60	34,5	46,5	48	80	28	M10	58	70,0	**PHE FRC180FTB**	**PHE FRC180HTB**	**PHE FRC180RSB**
230	225	155	3 020	25	75	39,5	52,5	55	100	45	M12	77	90,0	**PHE FRC230FTB**	**PHE FRC230HTB**	**PHE FRC230RSB**
280	275	206	3 525	35	100	51	66,5	67	115	55	M16	90	105,5	**PHE FRC280FTB**	**PHE FRC280HTB**	**PHE FRC280RSB**

[1] Clearance required for tightening/losening the bushing on the shaft

SKF Jaw Couplings

Jaw couplings provide a cost-effective solution for standard power applications, cushioning moderate shock loads and dampening low vibration levels.

Maintenance-free and easy to install, jaw couplings are available with a "snap wrap" element allowing element replacement in situ.

Urethane and hytrel elements have a greater power rating than nitrile elements and are recommended for applications where a compact, high torque solution is required.

Selection

1 Service factor
Determine the required service factor in tables **tables 9** and **10** on **pages 87** and **88**.

2 Design power
Multiply normal running power by the service factor. This gives the design power for selecting a coupling with a nitrile element.

3 Alternative elements
To allow coupling selection based on one power rating table (nitrile), an element correction is required to give a new reference design power. This is done by dividing the design power calculated for a nitrile element by the alternative element power factor listed in **table 1**.

4 Coupling size
Using **table 2** on **page 78**, search for the appropriate speed until a power greater than the design power is found. The required jaw coupling is given at the head of the column.

5 Bore size
Using prodcut table on **page 80**, check that the selected flanges can accommodate both the drive and driven shaft.

Example

A jaw coupling is required to transmit 4 kW from an electric motor running at 300 r/min to a centrifugal fan for 12 hours per day. The motor shaft is 20 mm diameter and the pump shaft diameter 18 mm.

1 Service factor
From **table 9** on **page 87** = 1,0.

2 Design power
Design power = 4 × 1,0 = 4 kW

3 Coupling size
When looking for for 300 r/min in **table 2** on **page 78**, the first power figure to exceed the required 4 kW of step 2 is 4,7 kW. In this case, a nitrile element can be used with a jaw coupling size 150.

4 Bore size
By referring to the product table on **page 80**, it can be seen that both shaft diameters fall within the bore range available.

Engineering data

Power ratings

Maximum torque figures should be treated as short duration overload ratings occurring in circumstances such as direct-on-line starting.

For speeds not shown, calculate the nominal torque for the design application using the formula below and select coupling according to nominal torque ratings.

$$\text{Nominal torque (Nm)} = \frac{\text{Design power (kW)} \times 9\,550}{\text{r/min}}$$

For additional useful information on jaw couplings, such as standard bore and keyway data, please refer to **tables 1** to **3**.

Table 1

Elements

Type	Temperature range	Misalignment		Power factor
		Angular	Parallel	
–	°C	°	mm	–
Nitrile	–40 to 100	1	0,38	1
Urethane	–35 to 70	1	0,38	1,5
Hytrel®	–50 to 120	0,5	0,38	3

Order data

A complete jaw coupling consists of: 2 hubs and 1 element. A complete coupling with spacer consists of 2 hubs, 2 nitrile wrap elements, 2 ring kits and 1 spacer.

For more detailed information on ordering specific couplings, refer to **table 4**.

Table 2

Power ratings – Nitrile elements

Speed	Coupling sizes 50	70	75	90	95	100	110	150	190	225
r/min	kW									
50	0,018	0,030	0,06	0,10	0,14	0,3	0,5	0,8	1,1	1,5
100	0,037	0,060	0,12	0,20	0,27	0,6	1,1	1,6	2,1	2,9
200	0,074	0,121	0,25	0,40	0,54	1,2	2,2	3,1	4,2	5,9
300	0,110	0,181	0,37	0,60	0,81	1,7	3,3	4,7	6,3	8,8
400	0,147	0,242	0,50	0,80	1,08	2,3	4,4	6,3	8,4	11,7
500	0,184	0,302	0,62	1,01	1,35	2,9	5,5	7,9	10,5	14,7
600	0,221	0,363	0,75	1,21	1,62	3,5	6,6	9,4	12,6	17,6
700	0,257	0,423	0,87	1,41	1,89	4,1	7,7	11,0	14,7	20,5
720	0,265	0,435	0,90	1,45	1,95	4,2	7,9	11,3	15,1	21,1
800	0,294	0,483	1,00	1,61	2,16	4,6	8,8	12,6	16,8	23,5
900	0,331	0,544	1,12	1,81	2,43	5,2	9,9	14,1	18,8	26,4
960	0,353	0,580	1,20	1,93	2,59	5,6	10,6	15,1	20,1	28,1
1 000	0,368	0,604	1,25	2,01	2,70	5,8	11,0	15,7	20,9	29,3
1 200	0,441	0,725	1,50	2,41	3,24	7,0	13,2	18,8	25,1	35,2
1 400	0,515	0,846	1,74	2,81	3,78	8,1	15,4	22,0	29,3	41,1
1 440	0,529	0,870	1,79	2,90	3,89	8,4	15,8	22,6	30,2	42,2
1 600	0,588	0,967	1,99	3,22	4,32	9,3	17,6	25,1	33,5	46,9
1 800	0,662	1,088	2,24	3,62	4,86	10,4	19,8	28,3	37,7	52,8
2 000	0,735	1,208	2,49	4,02	5,40	11,6	22,0	31,4	41,9	58,6
2 200	0,809	1,329	2,74	4,42	5,94	12,8	24,2	34,6	46,1	64,5
2 400	0,882	1,450	2,99	4,83	6,48	13,9	26,4	37,7	50,3	70,4
2 600	0,956	1,571	3,24	5,23	7,02	15,1	28,6	40,8	54,5	76,2
2 800	1,029	1,692	3,49	5,63	7,56	16,2	30,8	44,0	58,6	82,1
2 880	1,059	1,740	3,59	5,79	7,78	16,7	31,7	45,2	60,3	84,4
3 000	1,103	1,813	3,74	6,03	8,10	17,4	33,0	47,1	62,8	88,0
3 600	1,323	2,175	4,49	7,24	9,73	20,9	39,6	56,5	75,4	105,5
Nominal torque Nm	3,51	5,77	11,9	19,2	25,8	55,4	105	150	200	280

Table 3

Standard bore and keyway chart

Bore	Keyway	Coupling size 050	070	075	090	095	100	110	150	190	225
mm	mm	–									
9	3×1,4	X	X	X	X	–	–	–	–	–	–
10	3×1,4	X	X	X	X	–	–	–	–	–	–
11	4×1,8	X	X	X	X	–	–	–	–	–	–
12	4×1,8	X	X	X	X	X	–	–	–	–	–
14	5×2,3	X	X	X	X	X	X	–	–	–	–
15	5×2,3	–	X	X	X	X	X	–	–	–	–
16	5×2,3	–	X	X	X	X	X	X	X	–	–
17	5×2,3	–	X	X	X	X	X	X	X	–	–
18	6×2,8	–	X	X	X	X	X	X	X	–	–
19	6×2,8	–	X	X	X	X	X	X	X	X	–
20	6×2,8	–	–	X	X	X	X	X	X	X	–
22	6×2,8	–	–	X	X	X	X	X	X	X	–
24	8×3,3	–	–	–	X	X	X	X	X	X	X
25	8×3,3	–	–	–	–	X	X	X	X	X	X
28	8×3,3	–	–	–	–	X	X	X	X	X	X
30	8×3,3	–	–	–	–	–	X	X	X	X	X
32	10×3,3	–	–	–	–	–	X	X	X	X	X
35	10×3,3	–	–	–	–	–	X	X	X	X	X
38	10×3,3	–	–	–	–	–	X	X	X	X	X
40	12×3,3	–	–	–	–	–	–	X	X	X	X
42	12×3,3	–	–	–	–	–	–	X	X	X	X
45	14×3,8	–	–	–	–	–	–	–	X	X	X
48	14×3,8	–	–	–	–	–	–	–	X	X	X
50	14×3,8	–	–	–	–	–	–	–	–	X	X
55	16×4,3	–	–	–	–	–	–	–	–	X	X
60	18×4,4	–	–	–	–	–	–	–	–	–	X

Table 4

Order data

Coupling type	Flanges	Qty	Element	Qty	Spacer shaft	Qty	Nitrile wrap element	Qty	Ring kit	Qty
RSB both sides	PHE L095HUB	2	PHE L095NR or PHE L095UR PHE L095HL	1	PHE L090X ... SPACER	1	PHE L090NRWRAP	2	PHE L090RINGKIT	2
Bore with keyway/ RSB combination	PHE L095HUB PHE L095 – ... MM	1 1	PHE L095NR or PHE L095UR PHE L095HL	1	PHE L090X ... SPACER	1	PHE L090NRWRAP	2	PHE L090RINGKIT	2
Bore with keyway on both sides	PHE L095 – ... MM	2	PHE L095NR or PHE L095UR PHE L095HL	1	PHE L090X ... SPACER	1	PHE L090NRWRAP	2	PHE L090RINGKIT	2
Bore only/ RSB combination	PHE L095 – ... MMP PHE L095HUB	1 1	PHE L095NR or PHE L095UR PHE L095HL	1	PHE L090X ... SPACER	1	PHE L090NRWRAP	2	PHE L090RINGKIT	2
Bore only	PHE L095 – ... MMP	2	PHE L095NR or PHE L095UR PHE L095HL	1	PHE L090X ... SPACER	1	PHE L090NRWRAP	2	PHE L090RINGKIT	2
Bore only/bore with keyway combination	PHE L095 – ... MMP PHE L095 – ... MM	1 1	PHE L095NR or PHE L095UR PHE L095HL	1	PHE L090X ... SPACER	1	PHE L090NRWRAP	2	PHE L090RINGKIT	2

NR = Nitrile
UR = Urethane
HL = Hytrel

Available spacer shaft lengths are 100 mm and 140 mm. To complete the designation, add spacer length. For example: PHE L090X100SPACER for spacer of 100 mm, coupling size 090.
When ordering bored to size and keywayed hubs, it is required that the bore diameter is added to the designation found in the table above.
Where a keyway is NOT required, the designation should be suffixed with a P.
PHE L150-18MM = Hub Size 150 with 18 mm bore and keyway.
PHE L070-16MMP = Hub Size 070 with 16 mm bore (no keyway).

Installation

1 Place each coupling on its shaft so that shaft ends do not protrude into the internal section of the coupling (→ **fig. 1**). Then tighten the set screws.

2 Insert the coupling element into one side of the coupling (→ **fig. 2**).

3 Move the other coupling side into position and connect the two halves (→ **fig. 3**). Check that the assembled length is correct (→ **fig. 4**).

4 Check the angular misalignment by checking the assembled length in four positions at 90° around the coupling. Check parallel misalignment using a straight edge across the length of the coupling flange (→ **fig. 5**). Allowable angular misalignment for all jaw couplings is 1°. Allowable parallel misalignment for all jaw couplings is 0,38 mm.

Note: For most consistent results, check across at least 3 of the 6 points where the rubber elements are visible between the flanges.

Fig. 1



Fig. 2

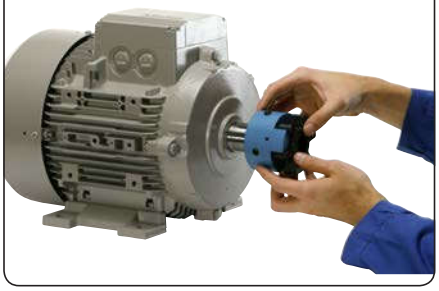

Fig. 3

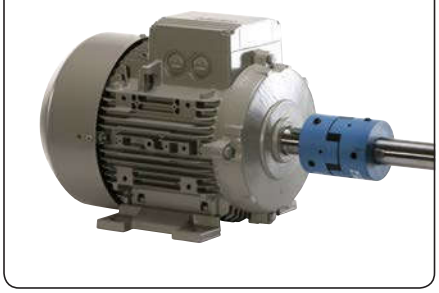

Fig. 4

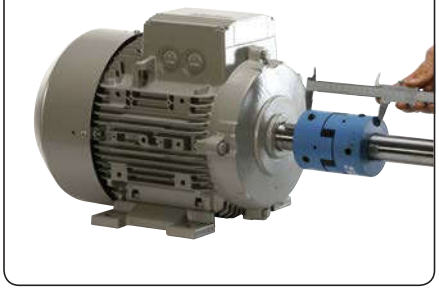

Fig. 5



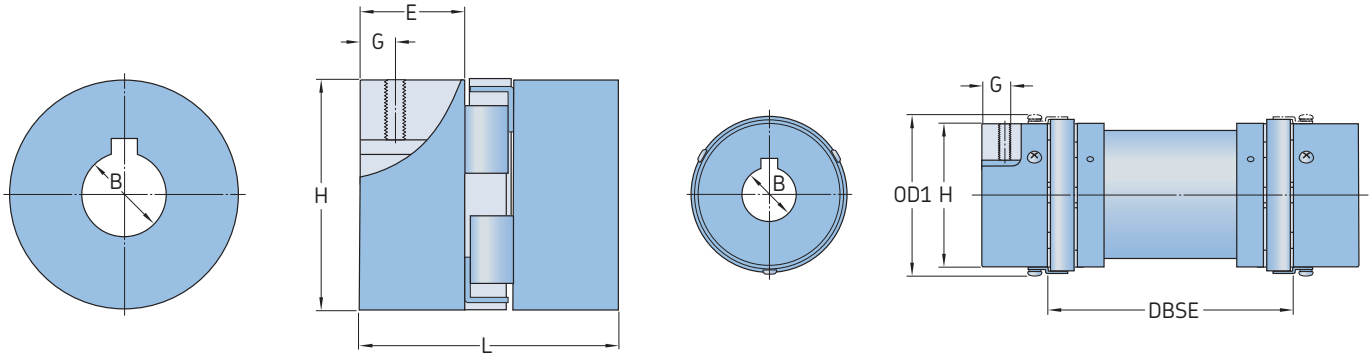

Hub Spacer

Size	Dimensions								Set screw	Approx. mass[2]	Speed	Designation
	Pilot B	Max.	OD	OD1[1]	L	E	H	G			Max.	
–	mm								–	kg	r/min	–
035	3,20	9,5	15,9	–	20,6	6,7	15,9	–	–	0,03	31 000	**PHE L035HUB**
050	6,35	14,0	27,5	–	44,0	16,0	27,5	6,5	M6	0,05	18 000	**PHE L050HUB**
070	6,35	19,0	35,0	–	51,0	19,0	35,0	9,5	M6	0,12	14 000	**PHE L070HUB**
075	6,35	24,0	44,5	–	54,0	21,0	44,5	9,0	M6	0,22	11 000	**PHE L075HUB**
090	6,35	24,0	54,0	–	54,0	21,0	54,0	8,7	M6	0,28	9 000	**PHE L090HUB**
095	11,11	28,0	54,0	64	64,0	25,0	54,0	11,0	M8	0,31	9 000	**PHE L095HUB**
100	12,70	35,0	65,0	77	89,0	35,0	65,0	11,0	M8	0,75	7 000	**PHE L100HUB**
110	15,87	42,0	84,0	97	108,0	43,0	84,0	19,0	M10	1,50	5 000	**PHE L110HUB**
150	15,87	48,0	96,0	112	115,0	45,0	96,0	22,0	M10	2,40	4 000	**PHE L150HUB**
190	19,05	55,0	115,0	130	133,0	54,0	102,0	22,0	M12	3,50	3 600	**PHE L190HUB**
225	19,05	60,0	127,0	143	153,0	64,0	108,0	29,0	M12	4,50	3 600	**PHE L225HUB**

[1] Outer diameter of ring kit
[2] Mass of hub with pilot bores
DBSE = Distance between shaft ends
Hub material is high grade cast iron. Spacer material is aluminium.

SKF Universal Joints

Universal joints, also known as pin and block couplings, are commonly used for low to medium torque industrial, off-road and agricultural applications.

These couplings offer an economical solution for applications up to 1 800 r/min and will provide working angles of up to 25° or 35° for manual drives. SKF offers these couplings with a solid bore from stock, bored to size, square, hexagonal and round bores on request. The couplings are available in either a single (UJMA) or double (UJMB) configuration.

Selection

Universal joints are selected based on torque. The following application information is required:

- Torque – power [kW]
- Speed [r/min]
- Joint angle [°]

The product tables on **page 82** provide maximum allowable torque (expressed in Nm) based on a 10° angle of inclination and continuous use.

However, if the inclination angle is not 10°, the values shown will be reduced or increased in accordance with the torque factors listed in **table 1**.

Torque is calculated using the following formula:

$$\text{Nominal torque (Nm)} = \frac{\text{Design power (kW)} \times 9\,549}{\text{r/min}}$$

Example

An electric motor is driving a small gearbox. The application has the following basic data.

- Power = 3 kW
- Speed = 1 500 r/min
- Joint angle = 20°

1 Determine the basic required torque

$$\frac{3 \text{ kW} \times 9\,550}{1\,500 \text{ r/min}} = 19{,}1 \text{ Nm}$$

2 Adjust the torque value to accommodate a 20° angle of inclination. **Table 1** lists a correction value of 0,75. The previously calculated basic torque rating must be divided by the correction factor in order to get the adjusted torque value. In other words, a joint with larger dimensions must be selected as the angle is greater than 10°.

$$\frac{19{,}1 \text{ kW}}{0{,}75 \text{ kg/m}} = 24{,}46 \text{ Nm}$$

3 From product table on **page 82**, the joint size UJMA13 is the proper selection.

Engineering data

For additional information about universal joints, refer to **table 1**.

Order data

Standard universal joints are without bore.

For addtional information about ordering specific universal joints, refer to **table 2**.

Table 1

Maximum allowable torque

Angle up to	Factor F
–	–
5°	1,25
10°	1
20°	0,75
30°	0,45
40°	0,30

Table 2

Order data

Universal joint type	Size	Qty
Single	PHE UJMA10	1
Double	PHE UJMB20	1

Available on request with finish bore, finish bore with keyway, hexagonal bore or square bore, e.g. the designations as shown below.

Universal joints with finish bore H7, with keyway (BSX30MM)
– PHE UJMB45BSX30MM
Universal joints with finish bore H7, without keyway (X30MM)
– PHE UJMB45X30MM
Universal joints with hexagonal bore (HBX30MM)
– PHE UJMB45HBX30MM
Universal joints with square bore (SBX30MM)
– PHE UJMB45SBX30MM

Single universal joints

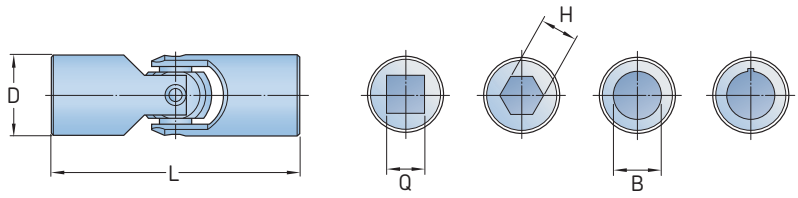

Size	Dimensions							Static breaking torque	Designation
	L	D	Bore B	Q	H	Bore B Max.	With keyway		
–	mm							Nm	–
10	38	10	6	6	6	6	–	13,5	**PHE UJMA10**
13	45	13	8	8	8	8	–	26	**PHE UJMA13**
16	52	16	8	8	8	10	8	45	**PHE UJMA16**
20	62	20	10	10	10	13	11	88	**PHE UJMA16**
25	74	25	12	12	12	16	14	180	**PHE UJMA25**
32	86	32	16	16	16	22	18	405	**PHE UJMA32**
40	108	40	20	20	20	25	22	860	**PHE UJMA40**
45	120	45	20	20	20	30	25	1 250	**PHE UJMA45**
50	132	50	25	25	25	35	30	1 730	**PHE UJMA50**
63	166	63	32	32	-	45	35	3 400	**PHE UJMA63**
75	190	75	40	40	-	55	45	5 300	**PHE UJMA75**

Standard is without bore.
Available on request with finish bore H7 – on request with keyway (B), hexagonal bore (H) or square bore (Q)

Double universal joints

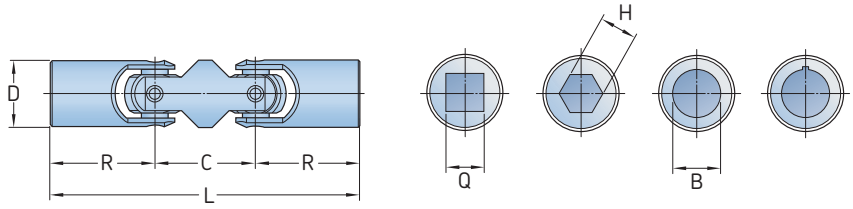

Size	Dimensions									Static breaking torque	Designation
	L	R	D	C	Bore B	B Max.	With keyway	Q	H		
–	mm									Nm	–
13	68	22,5	13	23	8	8	–	8	8	26	**PHE UJMB13**
16	77	26	16	25	8	10	8	8	8	45	**PHE UJMB16**
20	92	31	20	30	10	13	11	10	10	88	**PHE UJMB20**
25	110	37	25	36	12	16	14	12	12	180	**PHE UJMB25**
32	133	43	32	47	16	22	18	16	16	405	**PHE UJMB32**
40	164	54	40	56	20	25	22	20	20	860	**PHE UJMB40**
45	183	60	45	63	20	30	25	20	20	1 250	**PHE UJMB45**
50	202	66	50	70	25	35	30	25	25	1 730	**PHE UJMB50**
63	250	83	63	84	32	45	35	32	-	3 400	**PHE UJMB63**
75	290	95	75	100	40	55	45	40	-	5 300	**PHE UJMB75**

Standard is without bore.
Available on request with finish bore H7 – on request with keyway (B), hexagonal bore (H) or square bore (Q)

General engineering data on SKF couplings

Keyseat dimensions – metric, British standard (inch) and ANSI

Metric DIN 6885, Part I (Standard) and Part 3 (Shallow)

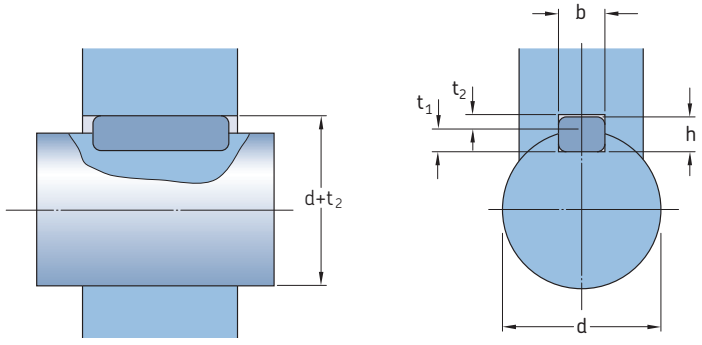

Table 1

Shaft diameter		DIN6885/1 (Standard)				DIN6885/3 (Shallow)			
Above	to (incl.)	Width	Depth	Shaft keyway depth	Hub keyway depth	Width	Depth	Shaft keyway depth	Hub keyway depth
d		b[1]	h	t_1	$d + t_2$	b[2]	h	t_1	$d + t_2$
mm		–				–			
6	**8**	2	2	1,2	d + 1,0	2	–	–	–
8	**10**	3	3	1,8	d + 1,4	3	–	–	–
10	**12**	4	4	2,5	d + 1,8	4	–	–	–
12	**17**	5	5	3	d + 2,3	5	3	1,9	d + 1,2
17	**22**	6	6	3,5	d + 2,8	6	4	2,5	d + 1,6
22	**30**	8	7	4	d + 3,3	8	5	3,1	d + 2,0
30	**38**	10	8	5	d + 3,3	10	6	3,7	d + 2,4
38	**44**	12	8	5	d + 3,3	12	6	3,9	d + 2,2
44	**50**	14	9	5,5	d + 3,8	14	6	4	d + 2,1
50	**58**	16	10	6	d + 4,3	16	7	4,7	d + 2,4
58	**65**	18	11	7	d + 4,4	18	7	4,8	d + 2,3
65	**75**	20	12	7,5	d + 4,9	20	8	5,4	d + 2,7
75	**85**	22	14	9	d + 5,4	22	9	6	d + 3,1
85	**95**	25	14	9	d + 5,4	25	9	6,2	d + 2,9
95	**110**	28	16	10	d + 6,4	28	10	6,9	d + 3,2
110	**130**	32	18	11	d + 7,4	32	11	7,6	d + 3,5
130	**150**	36	20	12	d + 8,4	36	12	8,3	d + 3,8
150	**170**	40	22	13	d + 9,4	–	–	–	–
170	**200**	45	25	15	d + 10,4	–	–	–	–
200	**230**	50	28	17	d + 11,4	–	–	–	–
230	**260**	56	32	20	d + 12,4	–	–	–	–
260	**290**	63	32	20	d + 12,4	–	–	–	–
290	**330**	70	36	22	d + 14,4	–	–	–	–
330	**380**	80	40	25	d + 15,4	–	–	–	–
380	**440**	90	45	28	d + 17,4	–	–	–	–
440	**550**	100	50	31	d + 19,5	–	–	–	–

Metric keyway designation should be width x depth (b x h)
[1] Tolerance range of the hub key width b is JS9.
[2] Tolerance range of the hub key width b is J9.

British Imperial Standard (inch) and ANSI standard (inch)

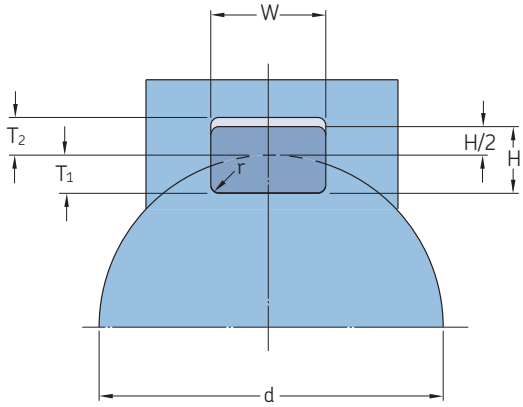

Table 2

BS46, Part 1 – 1958 (Standard)

Shaft diameter					
Over	to (incl.)	Width	Depth	Shaft keyway depth	Hub keyway depth
d		W[1]	H	T_1[2]	T_2[3]
in.					
1/4	1/2	1/8	1/8	0.072	0.06
1/2	3/4	3/16	3/16	0.107	0.088
3/4	1	1/4	1/4	0.142	0.115
1	1-1/4	5/16	1/4	0.146	0.112
1-1/4	1-1/2	3/8	1/4	0.15	0.108
1-1/2	1-3/4	7/16	5/16	0.186	0.135
1-3/4	2	1/2	5/16	0.19	0.131
2	2-1/2	5/8	7/16	0.26	0.185
2-1/2	3	3/4	1/2	0.299	0.209
3	3-1/2	7/8	5/8	0.37	0.264
3-1/2	4	1	3/4	0.441	0.318
4	5	1-1/4	7/8	0.518	0.366
5	6	1-1/2	1	0.599	0.412
6	7	1-1/4	1-1/4	0.74	0.526
7	8	2	1-3/8	0.818	0.573
8	9	2-1/4	1-1/2	0.897	0.619
9	10	2-1/2	1-5/8	0.975	0.666
10	11	2-3/4	1-7/8	1.114	0.777
11	12	3	2	1.195	0.823
12	13	3-1/4	2-1/8	1.273	0.87
13	14	3-1/2	2-3/8	1.413	0.98
14	15	3-3/4	2-1/2	1.492	1.026
15	16	4	2-5/8	1.571	1.072
16	17	4-1/4	2-7/8	1.711	1.182
17	18	4-1/2	3	1.791	1.229
18	19	4-3/4	3-1/8	1.868	1.277
19	20	5	3-3/8	2.01	1.385

[1] For inch keyway designation should be width x depth (W x H)
[2] Tolerance each on T1 and T2 (16" to 20") is –0.000/+0.010"
[3] Tolerance each on T1 and T2 (1" to 14") is –0.000/+0.006"

Table 3

ANSI B17.1 (inch)

Shaft diameter		ANSI B17.1 (USA – INCH)			
		Rectangular key		Square key	
Over	to (incl.)	Width	Height	Width	Height
d		W[1]	H	W	H
in.		–			
5/16	7/16	–	–	3/32	3/32
7/16	9/16	1/8	3/32	1/8	1/8
9/16	7/8	3/16	1/8	3/16	3/16
7/8	1-1/4	1/4	3/16	1/4	1/4
1-1/4	1-3/8	5/16	1/4	5/16	5/16
1-3/8	1-3/4	3/8	1/4	3/8	3/8
1-3/4	2-1/4	1/2	3/8	1/2	1/2
2-1/4	2-3/4	5/8	7/16	5/8	5/8
2-3/4	3-1/4	3/4	1/2	3/4	3/4
3-1/4	3-3/4	7/8	5/8	7/8	7/8
3-3/4	4-1/2	1	3/4	1	1
4-1/2	5-1/2	1-1/4	7/8	1-1/4	1-1/4
5-1/2	6-1/2	1-1/2	1	1-1/2	1-1/2
6-1/2	7-1/2	1-3/4	1-1/2	1-3/4	1-3/4
7-1/2	9	2	2-1/2	2	2
9	11	2-1/2	1-3/4	2-1/2	2-1/2
11	13	3	2	3	3
13	15	3-1/2	2-1/2	3-1/2	3-1/2
15	18	4	3	4	4

[1] Minimum recommended clearance above key is 0.005"
[2] Recommended tolerance on keyway width is +0.000"/–0.002"
[3] Recommended tolerance on key width is +0.002"/–0.000"
[4] A tight side-to-side fit is required between the key(s) and the shaft and hub keyways. Hand fitting at assembly is usually required

Table 4

Recommended bore tolerances for SKF steel coupling hubs

Shaft diameters		Bore diameter tolerances		
Nominal	Tolerance	Clearence	Standard	Interference
mm	–	–	–	–
6–30	k6	F7	H7	M6
31–50	k6	F7	H7	K6
51–80	m6	F7	H7	K7
81–100	m6	F7	H7	M7
101–200	m6	F7	H7	P7
201–355	m6	F7	H7	R7
356–500	m6	F7	H7	R8

Table 5

Service factors per application and torque demand

Torque demands driven equipment	Typical applications for electric motors	Service factor
	Constant torque centrifugal pumps, blowers and compressors.	1,0
	Continuous duty, some torque variations such as plastic extruders and forced draft fans.	1,5
	Light shock loads, such as metal extruders, cooling towers and log hauling.	2,0
	Moderate shock loads, such as rock crushers, rail car dumpers and vibrating screens.	2,5
	Heavy shock loads, such as roughing mills, reciprocating pumps and reversing runout tables.	3,0

Table 6

Standard (preferred) spacer lengths for respective coupling types

DBSE dimension		Coupling style				
Inch (ANSI)	Metric (ISO)	L Jaw	Grid	Gear	Disc	Tyre
in.	mm	–	–	–	–	–
	80	–	–	✓	–	✓
$3^1/_2$	*(89)*	✓	✓	✓	✓	–
(3.94)	**100**	✓	✓	✓	✓	✓
$4^3/_8$	*(111,13)*	–	✓	–	✓	–
5	*(127)*	✓	✓	✓	✓	–
(5.51)	**140**	✓	✓	✓	✓	✓
7	*(177,8)*	–	–	✓	✓	–
(7.08)	**180**	✓	✓	–	✓	✓
$9^3/_4$	*(247,65)*	–	✓	–	✓	–
(9.84)	**250**	–	–	✓	✓	–
$12^1/_4$	*(311,15)*	–	–	✓	–	–

The figures in BOLD in the respective columns are the preferred DBSE's for the standard (ANSI or ISO) shown. The figures in (italics) are conversions, and for reference purposes only.
The suitably of a particular coupling to accept any of the DBSE's above will be dependant on the coupling size. Check relevant dimension tables for that series.
Other lengths are available on request.

Table 7

Shaft diameters and ratings for NEMA 60 Hertz

T frames

Frame size	Shaft diameter	3 600 r/min		1 800 r/min		1 200 r/min		900 r/min	
		Drip proof	Enclosed	Drip proof	Enclosed	Drip proof	Enclosed	Drip proof	Enclosed
–	in.	hp		hp		hp		hp	
143	0,88	1 1/2	1 1/2	1	1	3/4	3/4	1/2	1/2
145	0,88	2-3	2	1 1/2–2	1 1/2–2	1	1	3/4	3/4
182	1,13	5	3	3	3	1 1/2	1 1/2	1	1
184	1,13	7 1/2	5	5	5	2	2	1 1/2	1 1/2
213	1,38	10	7 1/2	7 1/2	7 1/2	3	3	2	2
215	1,38	15	10	10	10	5	5	3	3
254	1,63	20	15	15	15	7 1/2	7 1/2	5	5
256	1,63	25	20	20	20	10	10	7 1/2	7 1/2
284	1,88	30	25	25	25	15	15	10	10
286	1,88	40	30	30	30	20	20	15	15
324	2,13	50	40	40	40	25	25	20	20
326	2,13	60	50	50	50	30	30	25	25
364	2,38	75	60	60	60	40	40	30	30
365	2,38	100	75	75	75	50	50	40	40
404	2,88	125	–	100	–	60	60	50	50
405	2,88	150	100	125	100	75	75	60	60
444	3,38	200	125	150	125	100	100	75	75
445	3,38	250	150	200	150	125	125	100	100

TS frames

Frame size	Shaft diameter	3 600 r/min		1 800 r/min		1 200 r/min		900 r/min	
		Drip proof	Enclosed	Drip proof	Enclosed	Drip proof	Enclosed	Drip proof	Enclosed
–	in.	hp		hp		hp		hp	
284	1,63	30	25	25	25	15	15	10	10
286	1,63	40	30	30	30	20	20	15	15
324	1,88	50	40	40	40	25	25	20	20
326	1,88	60	50	50	50	30	30	25	25
364	1,88	75	60	60	60	40	40	30	30
365	1,88	100	75	75	75	50	50	40	40
404	2,13	125	–	100	–	60	60	50	50
405	2,13	150	100	125	100	75	75	60	60
444	2,38	200	125	150	125	100	100	75	75
445	2,38	250	150	200	150	125	125	100	100

Table 8

Shaft diameters and ratings for metric foot-mounted motor (IEC)

Frame size	Shaft diameter	3 000 r/min	1 500 r/min	1 000 r/min	750 r/min
–	mm	kW	kW	kW	kW
80	19	0,75–1,10	0,55–0,75	0,37–0,55	0,18–0,25
90S	24	1,5	1,1	0,75	0,37
90L	24	2,2	1,5	1,1	0,55
100L	28	3,0	2,2, 3,0	1,5	0,75, 1,1
112M	28	4,0	4,0	2,2	1,5
132S	38	5,5–7,5	5,5	3,0	2,2
132M	38	–	7,5	4,0–5,5	3,0
160M	42	11–15	11,0	7,5	4,0–5,5
160L	42	18,5	15,0	11,0	7,5
180M	48	22	18,5	–	–
180L	48	–	22,0	15,0	11,0
200M/L	55	30–37	30	18,5–22	15,0
225S	55, 60	45	37–45	30	18,5
225M	55, 60	45	45	30	22
250S	60, 65, 70	55	55	37	30
250M	60, 65, 70	55–75	55–75	37–45	30–37
280S	65, 75, 80	75–90	75–90	45–50	37–45
280M	65, 75, 80	90–110	90–110	55–75	45–55

Service factors for chain, gear and grid couplings by application

Application	Electric motor with standard torque
Aerator	2,0
Agitators	
Vertical and horizontal	1,0
Screw, propeller, paddle	1,5
Barge haul puller	
Blowers	
Centrifugal	1,0
Lobe or vane	1,25
Car dumpers	2,5
Car pullers	1,5
Clarifier or classifer	1,0
Clay working machines	
Brick press	1,75
Pug mill	1,75
Briquette machine	1,75
Compressors	
Centrifugal	1,0
Rotary, lobe or vane	1,25
Rotary, screw	1,0
Reciprocating	
Direct connected	Contact SKF
Without flywheel	Contact SKF
With flywheel and gear between compressor and prime mover	
1 cylinder, single acting	3,0
1 cylinder, double acting	3,0
2 cylinders, single acting	3,0
2 cylinders, double acting	3,0
3 cylinders, single acting	3,0
3 cylinders, double acting	2,0
4 or more cylinders, single acting	1,75
4 or more cylinders, double acting	1,75
Conveyors	
Apron, assembly, belt, chain	1,0
Bucket flight, screw	1,25
Live roll, shaker	1,0
Inclined belt and screw	3,0
Reciprocating	1,75
Main hoist	1,75
Skip hoist	1,5
Slope	1,75
Bridge, travel or trolley	2,5
Cranes and hoist	1,75
Crushers	
Cable reel	1,25
Dredges	
Conveyors	2,0
Cutter head, jig drive	1,5
Maneuvering winch	1,5
Pumps (uniform load)	1,75
Dynamometer	
Screen drive, stacker	1,5
Utility winch	1,0
Elevators	
Bucket, centrifugal discharge	1,25
Freight or passenger	Not approved
Gravity discharge	1,25
Escalators	Not approved
Exciter, generator	1,0
Extruder, plastic	1,5
Fans	
Centrifugal	1,0
Cooling tower	2,0
Forced draft – across the lines start	1,5
Forced draft motor	
Driven through fluid or electric slip clutch	1,0
Gas recirculating	1,5
Induced draft with damper control or blade cleaner	1,25
Induced draft without controls	2,0
Feeder	
Apron, belt, disc, screw	1,0
Reciprocating	2,5
Generators	
Even load	1,0
Hoist or railway service	1,5
Welder load	2,0
Hammermill	1,75
Kiln	2,0
Laundry washer or tumbler	2,0
Line shafts	
Any processing machinery	1,5
Machine tools	
Auxiliary and traverse drive	1,0
Bending rolls, notching press	
Punch press, planer, plate	
Reversing	1,75
Main drive	1,5

Application	Electric motor with standard torque
Man lifts	Not approved
Mills (rotary type)	
Ball or pebble	2,0
Rod or tube	2,0
Metal forming machines	
Dryer and cooler	1,75
Continuous caster	1,75
Draw bench carriage and main drive	2,0
Extruder	2,0
Forming machine and forming mills	2,0
Slitters	1,0
Wire drawing or flattening	1,75
Wire winder	1,5
Coilers and uncoilers	1,5
Mixers (see agitators)	
Concrete	1,75
Muller	1,5
Press, printing	1,5
Pug mill	1,75
Pulverizers	
Hammermill and hog	1,75
Roller	1,5
Pumps	
Boiler feed	1,5
Centrifugal	
Constant speed	1,0
Frequent speed changes under load	1,25
Descaling, with accumulators	1,25
Gear, rotary, or vane	1,25
Reciprocating, plunger, piston	
1 cylinder, single or double acting	3,0
2 cylinders, single acting	2,0
2 cylinders, double acting	1,75
3 or more cylinders	1,5
Screw pump, progressing cavity	1,25
Vacuum pump	1,25
Screens	
Air washing	1,0
Grizzly	2,0
Rotary coal or sand	1,5
Vibrating	2,5
Water	1,0
Ski tows and lifts	Not approved
Steering gear	1,0
Stoker	1,0
Tyre shredder	1,5
Tumbling barrel	1,75
Winch, maneuvering	
Dredge, marine	1,5
Wind turbines	1,25
Windlass	1,5
Woodworking machinery	1,0
Work lift platforms	Not approved

For balanced opposed design, contact SKF
If people are occasionally transported, contact SKF for selection of the proper size coupling
For high peak load applications (such as metal rolling mills), contact SKF

Service factors for chain, gear and grid couplings by industry

Application	Electric motor with standard torque
Aggregate processing	
Cement, mining kilns	
Tube, rod and ball mills	
Direct or on low speed shaft of reducer, with final drive machined spur gears	2,0
Single helical or herringbone gears	1,75
Conveyors, feeders, screens, elevators	See general listing
Crushers, ore or stone	2,5
Dryer, rotary	1,75
Grizzly	2,0
Hammermill or hog	1,75
Tumbling mill or barrel	1,75
Brewing and distilling	
Bottle and can filling machines	1,0
Brew kettle	1,0
Cookers, continuous duty	1,25
Lauter tub	1,5
Mash tub	1,25
Scale hopper, frequent peaks	1,75
Clay working industry	
Brick press, briquette machine, clay working machine	1,75
Pug mill	1,75
Food industry	
Beet slicer	1,75
Bottling, can filling machine	1,0
Cereal cooker	1,25
Dough mixer, meat grinder	1,75
Lumber	
Band resaw	1,5
Circular resaw, cut-off	1,75
Edger, head rig, hog	2,0
Gang saw (reciprocating)	Contact SKF
Log haul	2,0
Planer	1,75
Rolls, non-reversing	1,25
Rolls, reversing	2,0
Sawdust conveyor	1,25
Slab conveyor	1,75
Sorting table	1,5
Trimmer	1,75
Metal rolling mills	
Coilers (up or down) cold mills only	1,5
Coilers (up or down) hot mills only	2,0
Coke plants	
Pusher ram drive	2,5
Door opener	2,0
Pusher or larry car traction drive	3,0
Continuous caster	1,75
Cold mills	
Strip mills	Contact SKF
Temper mills	Contact SKF
Cooling beds	1,5
Drawbench	2,0
Feed rolls – blooming mills	3,0
Furnace pushers	2,0
Hot and cold saws	2,0
Hot mills	
Strip or sheet mills	Contact SKF
Reversing blooming	Contact SKF
Slabbing mills	Contact SKF
Edger drives	Contact SKF
Hot mills	
Strip or sheet mills	Contact SKF
Reversing blooming	Contact SKF
Slabbing mills	Contact SKF
Edger drives	Contact SKF
Ingot cars	2,0
Manipulators	3,0
Merchant mills	Contact SKF
Mill tables	
Roughing breakdown mills	3,0
Hot bed or transfer, non-reversing	1,5
Runout, reversing	3,0
Runout, non-reversing, non-plugging	2,0
Reel drive	1,75
Rod mills	Contact SKF
Screwdown	2,0
Seamless tube mills	
Piercer	3,0
Thrust block	2,0
Tube conveyor rolls	2,0
Reeler	2,0
Kick out	2,0
Shear, croppers	Contact SKF
Sideguards	3,0
Skelp mills	Contact SKF
Slitters, steel mill only	1,75
Soaking pit cover drives	
Lift	1,0
Travel	2,0
Straighteners	2,0
Unscramblers (billet bundle busters)	2,0
Wire drawing machinery	1,75
Oil industry	
Chiller	1,25
Oil well pumping (not over 150% peak torque)	2,0
Paraffin filter press	1,5
Rotary kiln	2,0
Paper mills	
Barker auxiliary, hydraulic	2,0
Barker, mechanical	2,0
Barking drum	
L, S, shaft of reducer with final drive	
Helical or herringbone gear	2,0
Machined spur gear	2,5
Cast tooth spur gear	3,0
Beater and pulper	1,75
Bleachers, coaters	1,0
Calender and super calender	1,75
Chipper	2,5
Converting machine	1,25
Couch	1,75
Cutter, flet whipper	2,0
Cylinder	1,75
Dryer	1,75
Felt stretcher	1,25
Fourdrinier	1,75
Jordan	2,0
Log haul	2,0
Line shaft	1,5
Press	1,75
Pulp grinder	1,75
Reel, rewinder, winder	1,5
Stock chest, washer, thickener	1,5
Stock pumps, centrifugal	
Constant speed	1,0
Frequent speed changes under load	1,25
Suction roll	1,75
Vacuum pumps	1,25
Rubber industry	
Calender	2,0
Cracker, plasticator	2,5
Extruder	1,75
Intensive or banbury mixer	2,5
Mixing mill, refiner or sheeter	
One or two in line	2,5
Three or four in line	2,0
Five or more in line	1,75
Tyre building machine	2,5
Tyre and tube press opener (peak torque)	1,0
Tuber, strainer, pelletizer	1,75
Warming mill	
One or two mills in line	2,0
Three or more mills in line	1,75
Washer	2,5
Sewage disposal equipment	
Bar screen, chemical feeders, Collectors dewatering Screen, grit collector	1,0
Sugar industry	
Cane carrier and leveler	1,75
Cane knife and crusher	2,0
Mill stands, turbine driver with all helical or herringbone gears	1,5
Electric drive or steam engine	
Drive with helical, herringbone, or spur gearswith any prime mover	1,75
Textile industry	
Batcher	1,25
Calender, card machine	1,5
Cloth finishing machine	1,5
Dry can, loom	1,5
Dyeing machinery	1,25
Knitting machine	Contact SKF
Mangle, napper, soaper	1,25
Spinner, tenter frame, winder	1,5

For balanced opposed design, contact SKF
If people are occasionally transported, contact SKF for selection of the proper size coupling
For high peak load applications (such as metal rolling mills), contact SKF

Service factors for disc couplings by application

Application	Electric motor with standard torque
Agitators	
Pure liquid	1,0
Liquid with variable concentration	1,5
Briquetting machines	2,0
Canning machines	1,0
Compressors	
Centrifugal	1,5
Reciprocating (multi-cylinder)	3,0
Conveyors	
Apron	2,0
Belt	2,0
Disk	2,0
Bucket (on floor)	1,5
Chain	2,0
Reciprocating	3,0
Screw	2,0
Crushers (powder)	
Ball mill	2,5
Cement kiln	2,0
Dryer and cooler	2,0
Kiln	2,0
Pebble	2,0
Rod mill	2,0
Tumbling barrel	2,0
Crushers	
Ore	3,5
Stone	3,5
Cutters (for plant stems)	2,0
Dredges	
Cable reel	2,0
Conveyor	2,0
Cutter head drive	3,0
Jig drive	3,0
Maneuvering winch	2,0
Pumps	2,0
Screen drive	2,0
Stacker	2,0
Utility winch	2,0
Elevators	
Escalator	1,5
Freight	2,0
Extrusion press	
For plastic	2,0
For metal	2,5
Fans and blowers	
Centrifugal	1,0–1,5
Cooling tower (forced draft)	2,0
Induced draft	2,0
Lobe	1,5
Vane	1,5
Food industry	
Beet slicer	2,0
Cereal cooker	1,5
Dough mixer	2,0
Meat grinder	2,0
Generators (for general use)	1,5
Hammermill	3,0
Iron and steel making equipment	
Bloom or slab shear	3,0
Chain transfer	2,0
Cold rolling mill (tandem)	3,0
Continuous casting oscillation	3,0
Cooling bed	2,0
Crop shear	3,0
Descaler	3,0
Medium and small-size rolling mill (tandem)	3,0
Manipulator	3,0
Roller table (high load)	3,0
Roller table (low load)	2,0
Pipe welding machine	3,0
Lumber industry	
Barker (drum type)	2,5
Edger feed	2,0
Live roll	2,0
Log conveyor	2,0
Off-bearing roll	2,0
Planer	2,0
Slab conveyor	2,0
Sorting table	1,5
Deburring machine	2,0
Metal-working machines	
Bending roll	2,0
Planer	2,0
Punch press (gear-driven)	3,0
Machine tool	
Main drive	2,0
Auxiliary drive	1,5
Draw bench (carriage)	3,0
Draw bench (main drive)	3,0
Forming machine	3,0
Slitter	2,0
Table conveyor	
Non-reversing	3,0
Reversing	4,0
Wire-drawing machine	3,0
Wire-winding machine	2,5
Mixers	
Concrete mixer	2,0
Drum	2,0
Oil industry	
Chiller	1,5
Oil well pump	2,0
Paraffin filter press	2,0
Rotary kiln	2,0
Paper mills	
Barker	2,5
Beater and pulper	2,0
Bleacher	1,5
Calender	2,0
Couch	2,5
Cylinder	2,5
Dryer	2,5
Felt stretcher	1,5
Felt whipper	2,5
Jordan	2,0
Press	2,5
Reel	2,0
Stock chest	2,0
Suction roll	2,5
Washer anf thickener	2,0
Winder	2,0
Printing machines	2,0
Pumps	
Centrifugal	1,0–2,0
Reciprocating	
Double-action	2,5
Single-action	
1 or 2 cylinders	3,0
3 or more cylinders	2,5
Rotary (gear, lobe, vane)	1,5
Rubber industry	
Mixer (Banbury)	3,0
Rubber calender	2,0
Rubber mill	3,0
Sheeter	2,0
Tire-building machine	3,0
Tire-tube press opener	1,0
Tuber and strainer	2,0
Screens	
Air washing	1,0
Rotary (stone or gravel)	1,5
Vibrating	3,0
Textile industry	
Batcher	1,5
Calender	2,0
Carding machine	1,5
Cloth finishing machine	1,5
Dry can	2,0
Dryer	2,0
Tractor	1,5
Washing machines	
Reversing type	2,0
Water supply and sewage disposal equipment	
Pump	1,5
Winch	2,0

Service factors to be added to above values for heavy shock and fluctuating loads

Medium fluctuating load	Frequent torque fluctuations during operation. Motor starts and stops frequently.	0,5
Heavy fluctuating load	Frequent shock loads and heavy torque fluctuations.	1,0
Impact load	Frequent impact imposed on system. High fluctuations occur.	>1,5

Useful power transmission formulae

1 Power (kW)

1.1 Mechanical power [kW_M]

$$kW_M = \frac{M_T \times r/min}{9\,550} [kW]$$

Where

M_T Torque (moment) [Nm]

r/min revolutions per minute [min^{-1}]

1.2 Electrical power [kW_E]

$$kW_E = \frac{\sqrt{3} \times V \times I \times Cos\phi}{1\,000} [kW]$$

Where

V Voltage (Typically 415 V for 3 ph: 240V for single ph.)

I Current (amps)

cosϕ Power factor (typically 0,82–0,95. Ref motor catalogue)

√3 1,73 A constant for 3 phase machines of 415 V. (Ignore this for single phase machines with typically 240 V AC).

Note: To calculate the output kW, multiply the kW_E by the overall mechanical efficiency [0ξm].

2 Torque (moment) [M_T]

2.1 Basic formulae:

$M_T = F \times r$ [Nm]

Where

F Force (Newtons)

r Radius of element (meters)

2.2 Power and speed known:

$$M_T = \frac{kW \times 60 \times 10^3}{2 \times \pi \times r/min} [Nm]$$

Where

M_T Torque (moment) [Nm]

kW Kilowatt [kW]

r/min Revolutions per minute [min^{-1}]

9 550 is a constant, derived from:

$(60 \times 10^3) / 2\pi$

2.3 Alternatively, this may be reduced to

$$M_T = \frac{kW \times 9\,950}{r/min} [Nm]$$

3 Overhung loads (radial force) [F_R]

3.1 Radial force [F_R]

$$F_R = \frac{2 \times kW \times 9\,950}{d \times r/min} [N]$$

Where

kW Power [kW]

d Pitch circle diameter – pcd – [m]

r/min Revolutions per minute [min^{-1}]

3.2 Overhung loads [F_R]

$$F_R = \frac{2 \times kW \times 9\,950 \times K}{d \times r/min} [N]$$

Where

K_1 A constant, dependent on the driving element, typically

For:

Chain pinions

(>19T) = 1,00

(14T-18T) = 1,25

(<13T) = 1,40

Gears

(>17T) = 1,15

(<17T) = 1,30

V-Pulleys

= 1,50

Flat belts

= 2,50 – 3,00

(dependent on type/construction or material)

4 Velocity (linear motion) [m/s]

4.1 Velocity [ν]

$$\nu = \frac{d \times \pi \times r/min}{60 \times 10^3} [m/s]$$

Where

ν Velocity in metres per second [m/s]

d Pitch circle diameter – pcd – [mm]

(**Note**: If the pitch diameter is in metres, ignore the x 10^3 denominator).

4.2 For Chain drives [ν_1]

$$\nu_1 = \frac{p \times z \times r/min}{60 \times 10^3} [m/s]$$

Where

p Chain pitch [mm]

z Number of sprocket teeth

4.3 Angular acceleration [α] may be derived from the above

$$\alpha = \frac{(\nu_1 - \nu_2)}{t} 2 \times \pi [rad/sec^2]$$

Where

α Angular acceleration (radians per $second^2$)

ν_1 ,ν_2 Velocities 1 and 2 respectively [m/s]

T Time period between the velocities ν_1 and ν_2 [sec]

5 Sprocket (or chain wheel) pitch diameters [ϕ_p]

5.1 Pitch diameters [ϕ_p]

$$\phi_p = \left[\sin \frac{180}{z} \right]^{-1} [mm]$$

Where

ϕ_p Pitch diameter [mm]

z Number of sprocket teeth

p Chain pitch [mm]

sin Trig. function

6 Ratios [i]

$$i = \frac{N_1}{N_2} = \frac{M_2}{M_1} = \frac{D_1}{D_2} = \frac{Z_2}{Z_1}$$

Where

N_1, N_2 Input and output speeds respectively [r/min]

M_1, M_2 Input and output torque (moment) respectively [Nm]

Φ_1, Φ_2 DriveR and driveN pulleys [mm or inch]

Z_1, Z_2 Number of sprocket teeth on driveR and driveN

7 Factors and efficiencies

7.1 Gearbox efficiencies (x) (Typical only. Refer to manufacturers' tables for actual values)

7.1.1 Helical units single reduction 0,97
Double reduction 0,94
Triple reduction 0,91

7.1.2 Spur units single reduction 0,95
Double reduction 0,91
Triple reduction 0,88

7.1.3 Worm units: For small units (centres < 150 mm), an approximation of the mechanical efficiency can be made by subtracting the ratio from 100. E.g. for a 40:1 ratio unit, the oxm is approx. 60%. Thus, the larger the worm box centres, the more efficient (relatively) the unit.

7.2 V, Multi-rib and synchronous belts

7.2.1 Standard V-belts: classical jacketed 0,94–0,97

7.2.2 Raw-edge type V-belts 0,96–0,98

7.2.3 Standard synchronous (Trapezoidal profile – CTB) 0,96–0,97

7.2.4 High performance synchronous belts 0,97–0,98 (Curvilinear and modified curvilinear)

Note: The above belt efficiencies are based on new installations, with correctly maintained tensions.

7.3 More common: Co-efficient of friction [μ] for different materials

Steel on steel:
Static friction (dry) μ = 0,12–0,6
Sliding friction (dry) μ = 0,08–0,5
Static friction (greased)
μo = 0,12–0,35
Sliding friction (greased)
μo = 0,04–0,25

Wood on steel:
Static friction (dry) μ = 0,45–0,75
Sliding friction (dry) μ = 0,30–0,60

Wood on wood:
Static friction (dry) μ = 0,40–0,75
Sliding friction (dry) μ = 0,30–0,50

Polymer on wood:
Static friction (dry) μ = 0,25–0,45
Sliding friction (dry) μ = 0,25

Steel on polymer:
Static friction (dry) μ = 0,40–0,45
Sliding friction (greased) μ = 0,18–0,35

8 Common conversion factors and constants

8.1 Power [kW]

Hp x 0,746	Kilowatt [kW]
PS x 0,7355	Kilowatt [kW]
kp m/s x 0,0981	Kilowatt [kW]
kcal/s x 4,1868	Kilowatt [kW]

8.2 Torque (moment) [Nm]

kgf-m x 9,81	Newton-metre [Nm]
lbf-in x 0,1129	Newton-metre [Nm]
lbf-ft x 1,36	Newton-metre [Nm]

8.3 Force [N]

kgf x 9,81	Newton [N]
lbf x 4,45	Newton [N]
kp x 9,81	Newton [N]

[kp = kilopond]

8.4 Pressure and stress [MN/m^2 or N/mm^2]

pascal [Pa]	10^2 N/m^2
$lb/in^2 x 6,895 x 10^3$	newton/$metre^2$ [N/m^2]

8.5 Velocity [m/s]

1 m/s	196,86 feet / minute
	fpm x $5,0797 x 10^3$
	metres/second [m/s]
	miles per hour [mph]
	0,447 metres/second [m/s]

8.6 Capacity flow

1 litre/sec	0,5886 x 10^3 ft^3/min
1 m^3/s	35,3147 ft^3/s [cusec]

8.7 Density

Pound/$inch^3$	27,68 gram/centimeter
	2,768 x 10^4 kilogram/$metre^3$ [kg/m^3]
Ton/$yard^3$	693,6 kilogram/$metre^3$ [kg/m^3]

8.8 Mass

1 pound [lb]	0,45 kilogram [kg]
1 kilogram	2,20 pounds [lb]
1 stone	6,35 kilogram [kg]
1 ounce [oz]	0,03 kilogram [kg]
1 ton (short)	0,91 tonne (metric)

8.9 Energy

BTU (British Thermal Unit)
1 055 Joule [J]
1 055 Newton-metre [Nm]
0,252 kilocalorie
$0,02931 x 10^3$ kilowatt-hour [kWh]
0,393 x 10^3 horsepower-hour

General nomenclature and glossary

To ensure a proper understanding of coupling technology, it is important to be familiar with the terminology associated with the industry as a whole.

The following alphabetical listing, while basic in some areas, outlines the more commonly used terms and nomenclature. It is an ever-developing glossary under constant review and update. Refer also to Selection guidelines and evaluation tables.

A flexible coupling may be defined as:
"... a device, usually mechanical, that transmits power (torque) constantly, from one shaft to another, while allowing (if required), for some degree of misalignment (angular α°, parallel β, or a combination) and/or axial movement between the two shafts..."

AGMA (American Gear Manufacturers Association), the national authority in the US with respect to gear (and coupling) standards (e.g. minimum rating standards and coupling flange inter-connection). (See also standards).

ANSI (American National Standards Institute), the governing body of all standards in the USA (See also standards).

Axial and axial direction: A projection or movement along the line of axis of rotation. For example, the position of a coupling hub on a shaft may be changed by sliding the hub in either direction, thus affecting its axial position on the shaft. An axial screw is used to secure a flange or hub to a machine member, whereby the screw is affixed parallel to the axis of rotation of the shaft.

Backlash: The amount of free play or movement between two rotating, mating parts. If one half of an elastomeric coupling is held rigid, and a torque applied to the other half, the amount of radial movement is referred to as backlash, and may be expressed in degrees, or 0,001 mm. (Backlash is not the same as stiffness (see above). Backlash is sometimes referred to as **torsional rigidity.**

In a **torsionally rigid** or backlash-free coupling, there will be zero play or movement between the driving and driven units. Each will rotate at exactly the same time, with no angular differential (°), usually measured in minutes or degrees.

Blade Pass Frequency (BPF) (**→ fig. 1**)
A phenomenon that can be inherent in cooling tower (CT) fan drives with cardan shaft drives. It is where the passing of the blade over the shaft can set up a destructive resonance, especially if the cardan shaft DBSE's are large (in relation to shaft diameter).

Bushing and taper bushing: A cylindrical sleeve used to adapt a bored part to a smaller diameter shaft. The taper bushing has a slightly tapered outside diameter, and is located in the hub element by means of a series of bolts or screws. Two main bushing methods are popular:

- Taper bushing
- QD (Quick Detachable – referring to ease of installation) bushing dominant in the U.S. market, and usually only seen on imported machinery outside the Americas.

A more recent addition from Europe is the friction-locking/cone clamping element or locking assembly , which for SKF is series "FX". Used extensively in servo-couplings for zero backlash, and positioning.

Bore: The central hole which is the mounting surface for the product or hub on the shaft. Close tolerances are required, typically referred to as transition or interference. 'Clearance' is normally only used for light duty applications.

Cardan shaft: A length of shaft, usually hollow in cross-section (for weight and strength benefits), mounted between two flanges of the respective couplings. For longer spans, a calculation is often necessary to check for whirling and buckling at critical speeds (frequencies).

The coupling may accept both angular and parallel offset combined. (For smaller span distances a spacer type insert is usually used.)

Damping: Usually referred to in relation to elastomeric couplings, (although the grid type coupling can also offer up to 30% damping). This is the ability of the elastomeric material to dampen or change the frequency or resonance usually from the driver to the driven side. (**→ diagram 1**)

Different elastomeric materials can be used to offer a range of characteristics in most coupling types. Damping can be critical if the drive system has similar common frequencies (Refer also to stiffness).

Distance between shaft (Ends): The distance between the face of one shaft and that of the other. This is sometimes referred to in US publications as the BSE measurement (Between Shaft Ends, or more commonly, DBSE (Distance Between Shaft Ends)

Donut:The elastomeric element in a donut type elastomeric coupling (e.g. Centaflex)

Drop-out: The spacer type coupling is often referred to as a drop-out coupling. The drop-out portion fits between the two shaft ends, and is approximately equal to the DBSE dimension.

End-float: The ability of a coupling to move axially, usually to compensate for forces inherent in the system when at operating temperature.

Elastomer and elastomeric elements:
Resilient materials through which the power of a coupling is transmitted. They are in some way attached to, or located at, the coupling halves, and usually made of rubber, synthetic rubber (NBR), or plastics-urethane, Hytrel, Viton, etc. Material selection is often dictated by environment.

Flange: A portion, usually of one coupling half, which extends outward from the normal outside diameter of the half, to a flange of similar size on the (driven) machine. As a rule, there is no hub with a bore on this coupling half, nor is there any shaft projecting from this portion of the (driven) machine.

Flexible couplings (and universal joints):
Devices for transmitting mechanical power from one rotating shaft to another, while usually allowing for some degree of misalignment between the shafts.

Flexlink and disc pack: Metallic, flexible members of all steel couplings. They take the place of the elastomeric element. Power is transmitted through these metallic members, (alternately attached to the coupling hubs), and they allow for angular (α), and, in some cases, parallel (Δ_1) misalignment.

Floating shaft: A configuration of a long shaft, mounted between two flexible couplings (usually single engagement). The arrangement allows the shaft to float between

centres to find its best operating angle and position. The greater the distance between the two flex half hubs, the greater the allowable angular misalignment (**→ fig. 2**).

Keyway: The rectangular slot cut into the bore. Depending on the country, they may be to BS46, ISO or DIN 6885/1, or for shallow keyways, DIN 6885/3. For the US market, typically to ASME B17.1

Dimensions vary between the US and other standards, with the European markets preferring rectangular keys, and the US favouring square keys. Either option is available however, for all markets (See also standards).

Note: Key tolerance fit (normal) should be N9, and P9 for close, tight fit.

kW (or Hp) / 100 r/min: This method of rating is shown in many US-based coupling catalogues, and allows easy estimation of the coupling power capacity. (Sometimes shown as Hp/c, 'c' being the Roman designation for 100. The rating is power, in kW or Hp, NOT torque.

$$\text{kW(Hp)/100 r/min} = \frac{\text{kW(Hp)} \times 100}{\text{r/min}}$$

To obtain the kW capacity of a coupling from the kW (Hp) / 100 r/min, multiply by the required r/min divided by 100 (e.g. at 1 440 r/min multiply by 14,4... 960 r/min multiply by 9,60 etc.)

Length Thru' Bore (LTB): The effective length of the hole, or that portion of the length which is usable, and may be attached to the shaft.

Limits and Fits (See "Tolerances")

Misalignment – Angular [α]: A measure of the angle between two shafts (**→ fig. 3**). It may be as an angular measurement (in degrees or minutes), or as a gap differential (X-Y) at two points 180° apart, and usually re-checked at 90° to the original.

Misalignment – Parallel [Δ]: The measure of the off-set between two shafts (**→ fig. 4**), and the summation of the difference (+/–) of both hubs to the centreline (axis of rotation).

Catalogue information usually shows the angular [α] and parallel [Δ] misalignment allowable for each coupling half, or the total permissible for the complete coupling. Check parameters!

In certain conditions there may a combination of both angular and parallel offset. **Important**: Not all coupling types are able to accommodate such a condition.

Outside diameter: The largest effective diameter of the product (e.g. flange, sleeve or cover diameter).

Overall length: The largest effective length of the product, part or fully assembled unit.

Overhung load (OHL, or F_{RA}): The load or weight on a shaft as a result of the mounting of the coupling, pulley, sprocket, gear or other drive element on the shaft. Overhung load is expressed as the total of the load on the shaft. Allowable overhung loads usually refer to the load being applied at some point "X" (midway) along the shaft, or factored accordingly, if it is beyond the midway point from the last bearing.

$$\text{OHL} = \frac{2 \times 9\,550 \times \text{kW} \times K_1}{\text{r/min} \times \text{pcd}} \text{ [Newtons]}$$

Where

K_1	A constant, typically
Chain sprocket	1,00
Gear	1,25
V-Belt pulley	1,50
Flat belt	2,50–3,00

Power (Kilowatt – kW): The rate at which torque is applied. Since applied torque causes the shaft and its connections to rotate, a certain r/min results. The ISO measurement of power is the kilowatt [kW].

$$\text{kW} = \frac{\text{Torque [Nm]} \times \text{r/min}}{9\,550}$$

Also

$$\text{kW} = \frac{2 \times \pi \times \text{r/min} \times M_T}{60 \times 10^3}$$

Note: Electrically, based on current [amp] readings, power may also be calculated by the following formulae. This will give the demand power if the amps value is based on the drawn amps of the running motor and not on nameplate values.

$$\text{kW}_E = \frac{\sqrt{3} \times V \times I \times \text{Cos}\phi \times {}_{\mu}\xi_o}{1\,000} \text{ [kW]}$$

Where

Cosφ	Motor power factor (from nameplate or catalogue)
${}_{\mu}\xi_o$	Overall mechanical efficiency [%] (from nameplate or catalogue)
I	Amps
V	Volts

To convert kW to horsepower [Hp], divide kW by 0,746.

Radial: Any projection / direction outwardly from the centre of the shaft, or cylindrical-shaped object. The centre-line of the projection normally passes through the axial centre-line of the object. Examples are capscrew holes, and the arms of coupling spiders.

Reactionary force [FR]: The force exerted onto the shaft by the coupling, due to misalignment and / or run-out and axial float. The resultant force is applied perpendicular to the coupling.

$$F_{RA} \text{ or } F_{RB} = 5\,600 \times \sqrt{\frac{P}{N}} \text{ [N]}$$

Where

F_{RA}	Load applied perpendicular to the coupling [N], at pos A[1)]
P	Power [kW]
N	Speed [r/min] at the point being considered (e.g. 'A' or 'B')

R/min: Revolutions per minute. In European catalogues, this is sometimes written as min^{-1}, or just n_1.

RSB (Rough Stock Bore): The minimum mandrel or pilot bore of the hub of the coupling.

Runout and eccentricity (T.I.R.)
A measure of the amount that a cylindrical body is off its true centre.

When a coupling half is rotated on the shaft, the outside diameter of the coupling may be slightly 'off to one side', axially and /

[1)] A common method/nomenclature is to refer to the LS (low speed) shaft loadings in gear units as FRA, and on the input/high speed, or HS, as FRB.

or radially. A dial indicator, measuring in 0,001 mm increments, is used to measure the run-out. This measurement reading is often referred to as the "T.I.R." – total indicator read-out, which measures the total 'play, as +/-.

Set screw: Headless screw, with hex head-shaped socket, used over the keyway to keep the key in place and to prevent the product (hub) moving axially.

Shaft: Normally a cylindrical shaped machine member which rotates, and provides the means for supporting a coupling hub, U-joint, pulley, sprocket gear or other drive element. It may also be square or hexagonal in profile.

Sleeve: The elastomeric element of a shear type elastomeric coupling.

Slider coupling: Usually used in flanged gear couplings, the internal gear of the cover has an extended length (width) of the gear teeth cut into it. This allows the hub(s) to move axially for a set distance, while still maintaining full load (torque) capability. (→ **fig. 5**)

However the angular misalignment capability of the slider coupling is reduced by up to 50% of that of the equivalent standard configuration.

Available in three types of slider designs, and width (axial movement) options. They are available in both double (DE) or single (SE) engagement types.

Spacer: The portion of the flexible coupling (or U-joint) which spans the gap between the ends of the shaft. Spacer type couplings are used when the distance from one shaft end to another, is greater than the distance between normal coupling spacing. (→ **fig. 6**)

Special spacers may be used when the shaft spacing cannot be bridged by a standard coupling. There are international recommendations for the coupling length (API (US) and ISO/DIN).

The metric lengths are 100 mm, 140 mm and 180 mm. The US standards are 3 $^1/_2$", 5" and 7".

This type of coupling is extensively used in the pump industry, allowing pump maintenance without the need to remove or relocate the motor, and rapid repair in any instances of gland packs etc.

Spider: The elastomeric element of a flexible coupling, usually with 4 or 6 arms or fingers. They may be straight, curved or circular in shape. Typical materials are nitrile (NBR), neoprene, urethane (often available in various durometer °A hardnesses), and hytrel. In some types, a bronze insert is also available for slow speed extreme applications. (See also "L" Jaw).

Standards: Usually dimensional (and sometimes minimal performance) criteria set by a number of recognized organisations worldwide.

Common standards organisations and references include:

- AGMA – American Gear Manufacturers Association (USA)
- ANSI – American National Standards Institute (USA)
- ASME – American Society of Mechanical Engineers (USA)
- BSI – British Standards Institute (UK)
- DIN – Deutsche Industrial Norman (Germany)
- IEC – International Electrical Code (International – metric)
- ISO International Standards Organisation (International – metric)
- JIS – Japanese Industrial Standard (Japan)
- NEMA – National Electrical Manufacturers Association (USA)
- SAE – Society of Mechanical Engineers (USA)
- SI – Systeme Internationale (International – metric)

Stiffness: (also called torsional stiffness [Ψ_T] is usually expressed in Nm/rad. A measure of the compression of the elastomeric element of the coupling, when torque is applied. It may be visualised as a twisting action, and is most obvious in couplings which transfer torque from one half to another through a rubber-like or plastic element such as a spider, donut or sleeve.

Tightening torque: [M_D]: The torque required to properly seat a setscrew, capscrew or bolt in an assembly of any kind. Applied to the setscrew, for example, it is the force applied to the wrench multiplied by the length of the wrench. (See torque below).

The actual tightening torque is generally given in the coupling assembly and installation instructions. It is important to note that all technical/performance details and specifications pertaining to the coupling's performance, will be based on correctly tightened (torqued) bolts and setscrews, where applicable.

Tolerances: (Limits and fits): The allowable variation in the nominal dimensions specified. For example, if the nominal bore is ϕ 24 mm, with an ISO tolerance of H7, according to ISO standards, the bore will have an upper limit of +0,021 mm and a lower limit of 0,000 mm, i.e. +0,024 /–0,000 mm. (Most engineering and bearing catalogues will have ISO tolerance tables).

For most coupling bores, fits are typically transition (e.g. H7) or intereference (e.g. K7 or M7 depending on diameter) and depending on duty and application.

Clearance (e.g. F7) should only be used for lighter duty applications with uniform loads. (Refer to 'Keyway').

Bore tolerances should also be referenced to the shaft tolerance for good fit.

The ISO system of **Limits and fits** (metric) is covered by global and national standards, some of which are listed below, for reference:

• ISO	ISO 286	Global
• DIN	DIN7160 / 61	Germany
• ANSI	ANSI B4.2	USA
• BS	BSI 4500	UK
• JIS	JIS B0401	Japan
• AS	AS 1654	Australia

Torque: (MT) The force (in Newtons) required to turn a shaft, multiplied by the radius (metres) at which the force is applied. The standard unit of torque in ISO terminology is Newton-metre [Nm].

Torque [M_T] = F x r [Nm]

(It may also be derived by using the "Power" [kW] formulae shown on **page 93**.)

Diagram 1

Balancing requirements

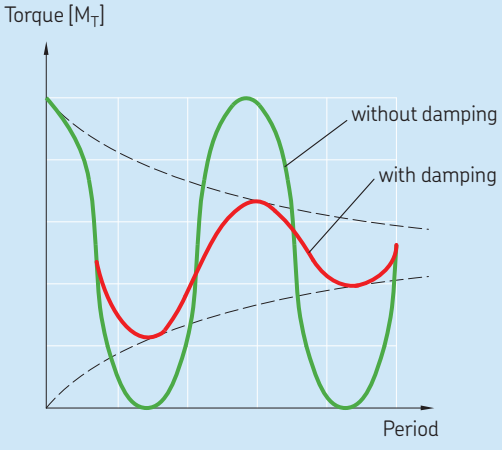

Fig. 1

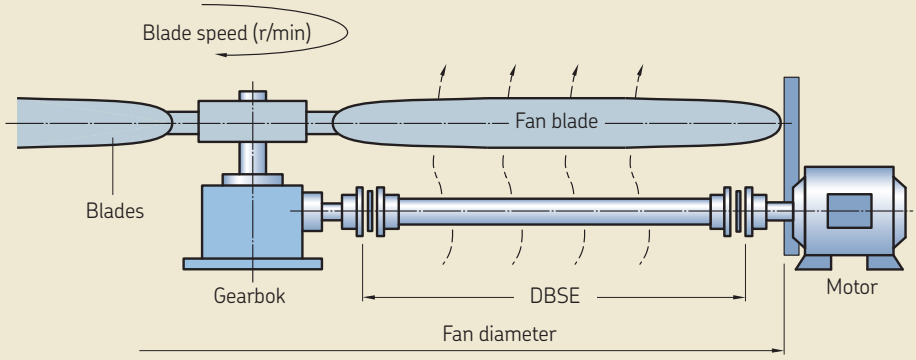

Fig. 2

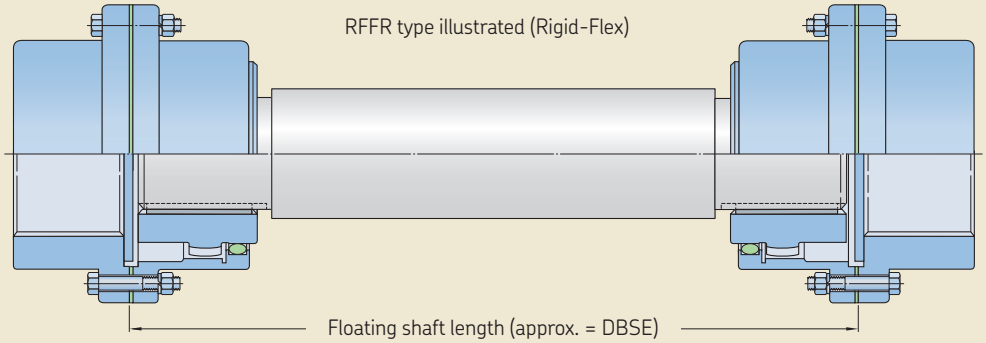

Fig. 3

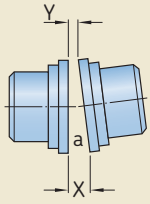

Fig. 4

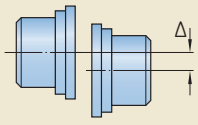

Fig. 5

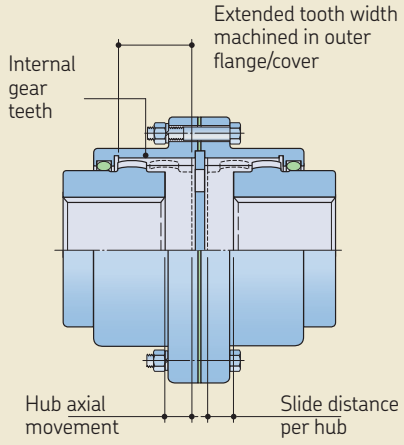

Fig. 6

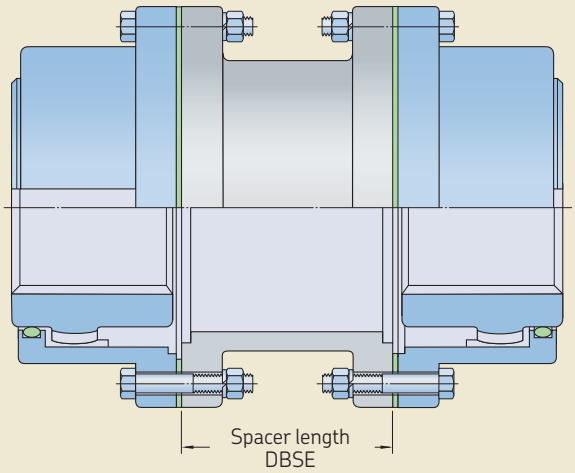

Lubrication

Grease lubrication for gear and grid couplings

For longevity, the greases used in gear or grid couplings must have characteristics different from general purpose greases, due to the fact that the couplings are rotating. At higher speeds in particular, the centrifugal forces induced by these higher speeds may cause the grease components to separate, resulting in breakdown and subsequent inability to adequately protect metal – metal contact faces.

Typical specifications:

- High resistance to centrifugal forces and separation. Consistency – NLGI 2 with worked penetration value in the range of 250–300 (10^{-1} mm)
- Maintaining good lubricating properties
- Both stain and corrosion free
- Minimum base oil viscosity 600 mm^2/sec at 400 °C

Grease recommendations are generally based on typical ambient temperature ranges of –300 to 950 °C, (some are available up to 1 400 °C) and selection should be based on a 6-month lubrication cycle, depending on loading, temperature and ambient conditions such as dirt, contamination, overload conditions, alignment etc.

For normal duty, National Lubricating Grease Institute recommendation is for NLGI#1 (with EP) grade greases.

At lower speeds, (typically below 300 r/min), a grease complying with NLGI #0 may be used. At very low speeds, the use of oil (with moderate EP capabilities) should be considered.

Table 1

Recommended greases

Manufacturer	Lubricant/Brand Name	Comment/NLGI#
SKF	**LMCG1**	**NLGI#1**
AMOCO	Amoco Coupling Grease	
BP OIL INTERNATIONAL	Energrease LS-EP1	NLGI#1
CALTEX	Coupling Grease	NLGI#1
CASTROL INTERNATIONAL	Speerol EPL	NLGI#1 & NLGI#0
ESSO	Fibrax 370	
KLÜBER LUBRICATION	Klüberplex GE 11-680	NLGI#0
MOBIL OIL	Mobilith SHC 1500 Mobilux EP111 Mobilgrease XTC	
OPTIMOL ÖLEWERKE	Longtime PD	NLGI#1 & NLGI#0
SHELL OILS	Alvania EP LF Albida GC1	NLGI#1
TEXACO	Coupling Grease Marfak 1 Marfak EPO	 NLGI#1 NLGI#0
TOTAL	Multi EP1 Specis EPG	NLGI#1 NLGI#0

Table 2

SKF Coupling Grease LMCG1

Characteristics	Test method	Value
Thickener		Polyethylene
Base oil		Mineral oil
Colour	Visual	Brown
NLGI grade	ASTM D217	#1
Dropping point	IP 396	>210 °C
Base oil viscosity at 40 °C	ISO 12058	670 mm^2/s (cSt)
Base oil viscosity at 100 °C	ISO 12058	34 mm^2/s (cSt)
4 ball weld load	DIN 51350:4	3 200 N
Temperature range	0 °C to +100 °C	(Max. 120 °C)
Mechanical stability		
Penetration 60 strokes	ISO 2137	310-340
Corrosion protection		
SKF Emcor WWO distilled water	ISO 11007mod	0-0
SKF Emcor WWO salt water	ISO 11007mod	2-2
Copper corrosion 24 h/100 °C	ASTM D4048	1b
Anti-wear properties		
4-ball wear scar (1h at 400 N)	DIN 51350:5	0,5 mm
Others		
Koppers Method, K36, 24 h	ASTM D4425	<24%
Approx. density at 20 °C	IPPM-CS/03	0,94
AGMA approvals	CG-1 and AGMA CG-2	
DIN Classification	GOG1G-0	DIN51 502
SKF Designation	Standard	LMCG1
Pack sizes	35 g tube; 400 ml tube; 2 kg can; 18 kg pail; 50 kg pail (on request)	

Table 3

Coupling speed range

Coupling size (Gear)	Speed range with NLGI 1 grease[1]	
	Minimum	Allowed
–	r/min	
10GC	1 030	7 000
15GC	700	6 000
20GC	550	5 000
25GC	460	4 750
30GC	380	4 400
35GC	330	3 900
40GC	290	3 600
45GC	250	3 200
50GC	230	2 900
55GC	210	2 650
60GC	190	2 450
70GC	160	2 150
80GC	140	1 750
90GC	120	1 550
100GC	110	1 450
1100GC	100	1 330
1120GC	94	1 200
1130GC	88	1 075
1140GC	82	920
1150GC	76	770
1160GC	72	650
1180GC	64	480
1200GC	58	370
1220GC	52	290
1240GC	48	270
1260GC	44	250
1280GC	40	230
1300GC	38	220

[1] Coupling speed range with NLGI 0 greases is from zero to maximums shown.
For northern climate applications. For continuous operation at constant ambient temperatures less than 0 °F or –18 °C (e.g. refrigeration systems), consult SKF.

(**Note:** In such cases, the coupling should be totally sealed for oil use, including sealing of the keyways).

Following are some typical specifications for different greases operating in medium conditions, loads and speeds. Commonly used brands are listed, though not limited to those shown.



Related products

SKF Shaft Alignment Tools

TKSA 11

New technology makes shaft alignment easier and more affordable

The SKF TKSA 11 heralds a new generation of shaft alignment tools. Using mobile devices, the instrument intuitively guides the user through the whole alignment process. With a focus on the core alignment tasks, the TKSA 11 is designed to be a very easy-to-use instrument that results in accurate alignment and is especially suitable for entry level shaft alignment. The SKF TKSA 11 is the first instrument on the market that uses inductive proximity sensors, enabling accurate and reliable shaft alignment to be affordable for every budget.

- Live view of the instrument and motor position makes the measurement and horizontal alignment intuitive and easy.
- The TKSA 11 app offers a fully functional demonstration mode allowing the complete alignment process to be experienced without the need to purchase the TKSA 11.
- The TKSA 11 is designed to give a fast return on its investment and is also affordable for almost every budget.
- Mobile devices allow high resolution graphics, intuitive usage, automatic software updates and display unit choice.
- By using inductive proximity sensors, the measurement is no longer affected by bright sunlight, influence of backlash is reduced and the instrument becomes more robust. All enabling the TKSA 11 to deliver highly accurate and reliable alignments.
- Automatic alignment reports give a complete overview of the alignment process and results. Reports can easily be shared via email or cloud services.





Available on the App Store

TKSA 31 and TKSA 41

The advanced laser shaft alignment system with enhanced measuring and reporting capabilities

The TKSA 31 and TKSA 41 are advanced laser alignment solutions with large sized detectors and bright lasers that allow precise measurements in even the most challenging conditions. The ergonomic display unit with intuitive touch screen navigation makes your alignments fast and easy, whilst innovative features increase the alignment convenience and performance. With the focus on improving alignment practices, the SKF Shaft Alignment Tools TKSA 31 and TKSA 41 are the industry's best value alignment solutions.

- Automatic measurement enables hands-free measurements by simply rotating the heads in the right position.
- Automatic reports are generated after each alignment and can be customised with notes and operator information. All reports can be exported as pdf files.
- Live view supports intuitive positioning of measuring heads and facilitates horizontal and vertical alignment corrections.
- Machine library gives an overview of all registered machines and allows easy access to previous alignment reports.

TKSA 41 only:

- Wireless communication improves instrument handling and measurement convenience.
- Free measurment allows measurements with limited rotational freedom to start at any angle and finish with an angular sweep of just 90°.
- Built-in camera allows machine pictures to be added to alignment reports or to the machine library.
- QR code recognition simplifies machine identification. Scanning a registered QR code opens the machine in the library and a new alignment can be started or previous reports reviewed.





The TKSA 31 communicates via USB cables, but it has the same alignment performance as the TKSA 41.



TKSA 60

The wireless laser shaft alignment tool with built-in alignment expert

The TKSA 60 is an extremely rugged wireless laser shaft alignment tool that can be used in harsh environments. The system provides instant expertise with a built-in step-by-step alignment process, from preparation, inspection and evaluation through correction, reporting and analysis. The system incorporates the latest alignment knowledge and decades of SKF experience of rotating equipment.



TKSA 80

The advanced laser shaft alignment tool to increase your alignment knowledge

For effective machine alignment, the measurement is only 5% of the process. Users often find themselves encountering difficulties by skipping some important alignment steps. The TKSA 80 system has a complete built-in alignment process to increase users' knowledge of alignment . The programme takes users from preparation and evaluation all the way through to correction and finally a report of the result. With a 7 inch screen, the TKSA 80 can accommodate large machine train alignment jobs. It offers a unique database to store the machine set-up data for future use, visual inspections on oil leakage, oil level, foundation bolt status and wear indications.



Shaft alignment is recommended for almost every industry, as it enables machine uptime to be significantly improved and maintenance costs to be reduced. The TKSA 11 focuses on industries where these shaft alignment benefits have not yet been realised and helps customers profit from correctly aligned shafts.

	TKSA 11	TKSA 31	TKSA 41	TKSA 60	TKSA 80
Overall system performance	+	++	++	+++	+++
System ruggedness Usability of the instrument in tough industrial environments.	+	+	+	++	++
User interface Input and interaction with the display device.	iOS	touch screen	touch screen	keypad	keypad & touch screen
QR code recognition QR labels can be used to simplify the machine identification and increase the usage convenience.	–	–	✓	–	–
Measurement type The "9-12-3" measurement demands pre-defined measurement positions, whereas the "free" measurement allows user selectable measurement positions.	9-12-3	9-12-3	free	free	free
Minimal shaft rotation Describes the minimal required shaft rotation angle to perform alignment measurements.	180°	140°	90°	60°	60°
Automatic measurement Alignment measurements can be performed hands-free without display unit interaction.	–	✓	✓	–	–
Wireless measuring heads	✓	–	✓	✓	✓
Maximum measurment distance Maximum distance between the measuring heads.	18,5 cm	2 m[1)]	4 m	10 m	10 m
Soft foot correction The soft foot tool helps to find and correct a soft foot, so that the machine can stand evenly on all feet.	–	✓	✓	✓	✓
Live alignment correction Live feed values are shown to facilitate the horizontal motor movement and vertical chock adjustment.	only horizontal	✓	✓	✓	✓
Automatic alignment report Reports are automatically generated after each alignment and can be exported as PDF files.	✓	✓	✓	✓	✓
Camera Photos can be added to the report.	✓[2)]	–	✓	–	–
Machine library Overview of all registered machines and previous alignment reports.	–	✓	✓	✓	✓
Thermal growth calculation	–	–	–	✓	✓
Vertical machine alignment Alignment of machines with vertical shafts.	–	–	–	✓	✓
Swap view Enables graphics to be swapped from one side of the machines to the other to accommodate the user position.	–	–	–	✓	✓
Machine train alignment Enables the alignment of up to 5 machines in a line.	–	–	–	–	✓
Run-out check The system reminds users to perform a simple measurement to look for bent shafts.	–	–	–	–	✓

[1)] With USB cables supplied
[2)] Depending on display device

SKF Machinery Shims TMAS series

For accurate vertical machinery alignment

Accurate machine adjustment is an essential element of any alignment process. SKF single slot pre-cut shims are available in five different dimensions and in ten different thicknesses.

- Made of high quality stainless steel, allowing re-use
- Easy to fit and to remove
- Close tolerances for accurate alignment
- Thickness clearly marked on each shim
- Fully de-burred
- Pre-cut shims are supplied in packs of 10 and complete kits are also available

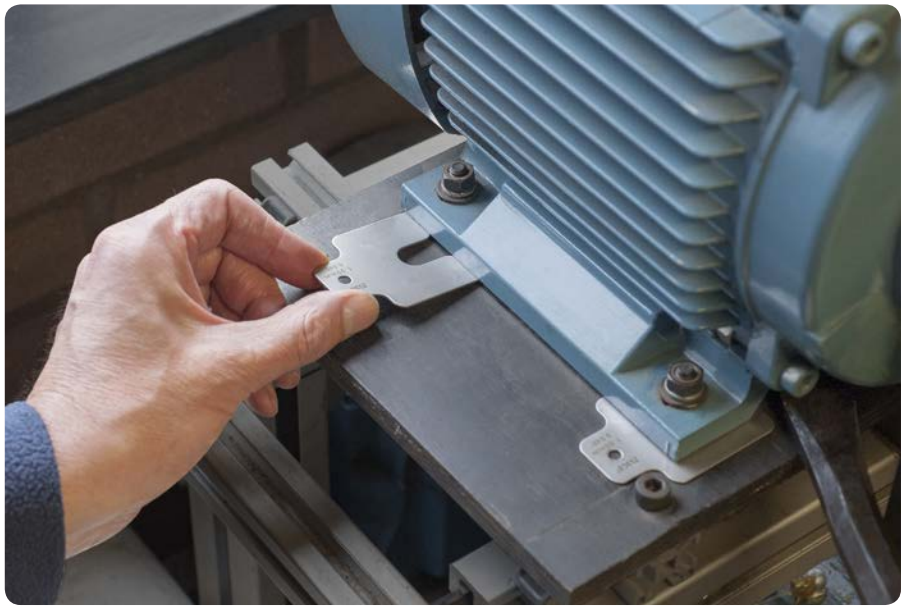

Shaft diameters and ratings for metric foot-mounted motor (IEC)

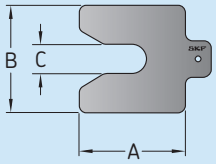

Designation	Numbers of shims per sheet	A	B	C	Thickness
–	–	mm	mm	mm	mm
TMAS 50-005	10	50	50	13	0,05
TMAS 50-010	10	50	50	13	0,10
TMAS 50-020	10	50	50	13	0,20
TMAS 50-025	10	50	50	13	0,25
TMAS 50-040	10	50	50	13	0,40
TMAS 50-050	10	50	50	13	0,50
TMAS 50-070	10	50	50	13	0,70
TMAS 50-100	10	50	50	13	1,00
TMAS 50-200	10	50	50	13	2,00
TMAS 50-300	10	50	50	13	3,00
TMAS 75-005	10	75	75	21	0,05
TMAS 75-010	10	75	75	21	0,10
TMAS 75-020	10	75	75	21	0,20
TMAS 75-025	10	75	75	21	0,25
TMAS 75-040	10	75	75	21	0,40
TMAS 75-050	10	75	75	21	0,50
TMAS 75-070	10	75	75	21	0,70
TMAS 75-100	10	75	75	21	1,00
TMAS 75-200	10	75	75	21	2,00
TMAS 75-300	10	75	75	21	3,00

Designation	Numbers of shims per sheet	A	B	C	Thickness
–	–	mm	mm	mm	mm
TMAS 100-005	10	100	100	32	0,05
TMAS 100-010	10	100	100	32	0,10
TMAS 100-020	10	100	100	32	0,20
TMAS 100-025	10	100	100	32	0,25
TMAS 100-040	10	100	100	32	0,40
TMAS 100-050	10	100	100	32	0,50
TMAS 100-070	10	100	100	32	0,70
TMAS 100-100	10	100	100	32	1,00
TMAS 100-200	10	100	100	32	2,00
TMAS 100-300	10	100	100	32	3,00
TMAS 125-005	10	125	125	45	0,05
TMAS 125-010	10	125	125	45	0,10
TMAS 125-020	10	125	125	45	0,20
TMAS 125-025	10	125	125	45	0,25
TMAS 125-040	10	125	125	45	0,40
TMAS 125-050	10	125	125	45	0,50
TMAS 125-070	10	125	125	45	0,70
TMAS 125-100	10	125	125	45	1,00
TMAS 125-200	10	125	125	45	2,00
TMAS 125-300	10	125	125	45	3,00
TMAS 200-005	10	200	200	55	0,05
TMAS 200-010	10	200	200	55	0,10
TMAS 200-020	10	200	200	55	0,20
TMAS 200-025	10	200	200	55	0,25
TMAS 200-040	10	200	200	55	0,40
TMAS 200-050	10	200	200	55	0,50
TMAS 200-070	10	200	200	55	0,70
TMAS 200-100	10	200	200	55	1,00
TMAS 200-200	10	200	200	55	2,00
TMAS 200-300	10	200	200	55	3,00

SKF Stroboscopes TKRS series





Easy, cost effective inspection in a flash

The SKF Stroboscopes, TKRS 10 and TKRS 20 are portable, compact, easy-to-use stroboscopes that enable the motion of rotating or reciprocating machinery to appear frozen.
They allow such applications as fan blades, couplings, gear wheels, machine tool spindles and belt drives to be inspected while running. TKRS stroboscopes are useful for ODR programmes and are an essential instrument for maintenance technicians.

The TKRS series have the following features:

- Ergonomic controls enable the flash rate to be set in a matter of seconds
- Phase shift mode enables the viewing of the object of interest to be rotated to the correct position for viewing; especially useful for gear wheels and fan blade inspection
- For ease of use for extended periods, they are equipped with a tripod mounting thread
- Supplied in a sturdy carrying case with universal charger

TKRS 10

- Flash rates of up to 12 500 flashes per minute cover a wide range of applications
- Easy to read LCD display
- Xenon flashtube source lasts for at least 100 million flashes
- Supplied with an extra flashtube to minimise unit downtime
- Rechargeable power pack alllows up to 2,5 hours of use between charging

TKRS 20

- Low energy consuming LED light source lets the rechargeable power pack to typically operate for at least twelve hours
- Bright and powerful flash gives a good target illumination at a distance, with a focused viewing area, and is ideal for outdoor use
- Flash rates of up to 300 000 flashes per minute cover most high speed applications. For routine inspections, the powerful lamp mode is useful
- A remote optical sensor is included enabling the flash rate to be easily triggered, and also enables the stroboscope to be used as a tachometer
- Easy to read LCD display shows user settings, and enables the ten user programmable flash rate memories to be quickly recalled
- Using the optional cable TKRS C1, the TKRS 20 can be connected to an SKF Microlog

Notes

Notes

skf.com
skfptp.com