HAUBER ELEKTRONIK









Vibration Monitoring Unit
Series HE200

MADE IN GERMANY | SIL2 | PL-d

CE IECEE EAC c UL us LISTED Proc. Cont. Eq. for Ord. Loc. Proc. Cont. Eq. for Haz. Loc. Segurança INMETRO UL BR OCP 0029

Ex IECEx UKCA

CCC KCs

- Vibration velocity (mm/s, rms)
  Vibration acceleration (g, rms)
- ATEX / IECEx / UKEx Zones 2/22 and 1/21
- cULus OrdLoc / HazLoc Div 2
- 2 potential-free semiconductor switches
- Analogue current output: 4–20 mA
- Frequency range: 10 Hz – 1000 Hz
  1 Hz – 1000 Hz

Date of manufacture:	_____
Type description:	_____
Serial no.:	_____

Operating instructions

Vibration Monitoring Unit
Type HE200

Standard and ATEX / IECEx / UKEx

Version: 2025-03-05

Attention!
Prior to commissioning the product, the instruction manual must be read and understood.

All rights reserved, including rights to translation.
Subject to modifications.

Please contact the company with any questions:
HAUBER-Elektronik GmbH
Fabrikstraße 6
D-72622 Nürtingen
Germany
Tel.: +49 (0) 7022 / 21750-0
Fax: +49 (0) 7022 / 21750-50
info@hauber-elektronik.de
www.hauber-elektronik.de

1 Contents

1 Contents 3
2 Safety information 5
3 Scope of this instruction manual 6
4 Vibration Monitoring Unit Type HE200 6
5 Intended Use 6
6 Scope of supply 6
7 Documents and Certificates 7
8 Transfer of liability when operating in potentially explosive atmospheres 7
9 Overview of application areas 8
10 Example labels 9
11 Information on the cULus validity range 10
12 Functional safety instructions 11
12.1 Safety level / key indicators 11
12.2 General notes 11
12.3 Instructions for the Fail Safe State 11
13 Technical data 12
13.1 General data 12
13.2 Electrical data 13
13.3 Operating range of the vibration monitoring unit 14
13.4 Typical frequency response 15
13.5 Properties of the integrated cable 16
13.6 Mechanical data 17
13.7 Housing dimensions 18
14 Connection 20
15 Functional description 22
15.1 Operating conditions 22
15.2 Alarm and limit setting 23
15.3 Limit values and delay times 24
16 Assembly and disassembly 26
16.1 General notes 26
16.2 Fixing the vibration monitoring unit to the mounting surface 26
16.3 Variant HE200.02 (Zone 2 / 22) 27
16.4 Tamper protection 28
17 Installation and commissioning 29
17.1 General notes 29
17.2 Earthing concept 29
18 Maintenance and repair 30
18.1 General notes 30
18.2 Troubleshooting table 31
19 Transport, storage and disposal 32

20 Coding HE200.....33
21 EU and UK Declaration of Conformity 34

2 Safety information

2.1 General

The safety instructions are intended to protect people and property from damage and hazards that could arise as the result of improper use, incorrect operation or other misuse or devices, especially in explosive areas. Therefore, please read the operating instructions carefully before working on the product or operating it. The operating instructions must be accessible to operating personnel at all times.

Please make sure that all documents are present and complete before commissioning or performing other work on the product. If the documents have not all been delivered in full or if further copies are necessary, they can also be obtained in other languages.

The product is built according to the latest state of the art. However, hazards to people, machinery and systems can still arise as the result of improper handling, unintended use or operation and maintenance by persons inadequately trained on the product.

All those who are involved in the installation, operation and maintenance of the product in the operator's plant must read and understand the operating instructions.

The product may only be assembled, disassembled, installed and repaired by instructed, sufficiently trained and authorised personnel.

2.2 Symbols used



This symbol indicates an explosion hazard.



This symbol indicates a hazard from electrical current.



This symbol indicates safety-related information.



This symbol indicates information unrelated to safety.

3 Scope of this instruction manual

This instruction manual for the HE200-type vibration monitoring unit applies to the following versions:
HE200.00, HE200.01 and HE200.02
The variants are functionally identical. The variants HE200.01 and HE200.02 have additional certifications and labels which permit use in potentially exclusive atmospheres.
For further information, see chapter "Overview of application areas” on page 8.

4 Vibration Monitoring Unit Type HE200

The HE200 type vibration monitoring unit is used to measure and monitor absolute bearing vibrations in machines in line with DIN ISO 10816.
It offers the following features:

- Two limit values and associated delay timings can be adjusted separately.
- The two potential-free unidirectional semiconductor switches will signal any exceeding of the relevant defined limit values. This can be used to generate a pre-alarm and a main alarm.
- Measurement parameter: The rms value of the vibration velocity (mm/s) or
  The rms value of the vibration acceleration (g).
- Analogue current output: Interference-free DC signal from 4-20 mA, proportional to the measuring range of the monitoring unit.

5 Intended Use

Type HE200 is used to protect machines and mechanical equipment against undue strong vibrations. It may only be used in accordance with the specifications listed in the data sheet. It is used exclusively for measuring mechanical vibrations. **Main fields of application:** Fans, ventilators, blowers, electric motors, pumps, centrifuges, separators, generators, turbines and similar oscillating mechanical equipment.



If the equipment is used in a manner not specified by the manufacturer, the protection provided by the equipment may be impaired.

6 Scope of supply

All versions include:

- Vibration monitoring
- Cylinder head screw with hex socket, M8 x 20 mm
- Seal label
- Operating instructions

7 Documents and Certificates

You can find the following documents and certificates for HE200 type at *www.hauber-elektronik.de* where they can be viewed and downloaded:

- EU type examination certificate ATEX Zone 1 / 21, no.: UL 20 ATEX 2421 X Rev. 0
- EU type examination certificate ATEX Zone 2 / 22, no.: UL 21 ATEX 2570 X
- IECEx certificate of conformity, no.: IECEx ULD 20.0022X
- UL Ord. Loc. certificate of compliance, no.: E507077-20210204
- UL Haz. Loc. certificate of compliance, no.: E516625-20220302
- UKEx certificate, no.: UL22UKEX2479X (Zone 1 /21)
- UKEx certificate, no.: UL22UKEX2480X (Zone 2 /22)
- EAC Declaration
- KCs Ex certificate, no.: 23-AV4BO-0277X, 23-AV4BO-0278X (Zone 1 / 21)
- KCs Ex certificate, no.: 23-AV4BO-0275X, 23-AV4BO-0276X (Zone 2 / 22)
- Functional safety certificate (SIL 2)
- Safety manual SIL2

8 Transfer of liability when operating in potentially explosive atmospheres

The owner of the system is exclusively liable for the appropriate configuration of the electrical connections with respect to explosion protection regulations and correct commissioning.

If the system is installed by a sub-contractor on behalf of the owner, the system may only be commissioned after the sub-contractor has issued written confirmation in the form of a certificate of installation that the system has been installed correctly and professionally in accordance with the applicable legal regulations.

The operator is obliged to notify the responsible authorities of the initial commissioning of explosion-protected systems or system components and their re-commissioning following extensive changes or maintenance.

9 Overview of application areas

Coding		HE200.00.xx.xx.xx.00.xxx	HE200.00.xx.xx.xx.01.xxx	HE200.02.xx.xx.xx.00.xxx	HE200.02.xx.xx.xx.01.xxx	HE200.01.xx.xx.xx.00.xxx	HE200.01.xx.xx.xx.02.xxx
Connection	M12 connector	x		x			
	Integrated cable		x		x	x	x
Measuring head temperature T_M Ambient temperature T_A	-40 °C ≤ T_M ≤ 85 °C -40 °C ≤ T_A ≤ 60 °C	x		x		x	
Restriction for the range of application cULus: -30 °C ≤ T_M ≤ 80 °C -30 °C ≤ T_A ≤ 60 °C	-35 °C ≤ T_M ≤ 125 °C -35 °C ≤ T_A ≤ 60 °C		x		x		
	-20 °C ≤ T_M ≤ 125 °C -20 °C ≤ T_A ≤ 60 °C						x

Standard	CE IEC EAC UKCA		x	x	x	x	x	x
	c UL us LISTED	Proc. Cont. Eq. Ord. Loc E507077	x	x	x	x		
Ex Zone 2 and 22	Ex UKCA	II 3G Ex ec IIC T4 Gc II 3D Ex tc IIIC 135°C Dc	UL 21 ATEX 2570 X; UL22UKEX2480X			x	x		
	IECEx Segurança INMETRO UL BR	Ex ec IIC T4 Gc Ex tc IIIC 135°C Dc	IECEx ULD 20.0022 Issue 0X; UL-BR 21.1250X			x	x		
	KCs	Ex ec IIC T4 Gc Ex tc IIIC T135°C DC	23-AV4BO-0275X 23-AV4BO-0276X			x	x		
	c UL us LISTED	Proc. Cont. Eq. Haz. Loc. Class I, Division 2, Groups A, B, C and D, T4 Class II, Division 2 Groups F and G, T4	E516625			x	x		
	CCC	Ex nA IIC T4 Gc Ex tD A22 IP66/67 T135°C	No: 2021122315114599			x	x		
Ex Zone 1 and 21	Ex UKCA	II 2G Ex db IIC T4 Gb II 2D Ex tb IIIC 135°C Db	UL 20 ATEX 2421 X; UL22UKEX2479X					x	x
	IECEx Segurança INMETRO UL BR	Ex db IIC T4 Gb Ex tb IIIC 135°C Db	IECEx ULD 20.0022 Issue 0X; UL-BR 21.1250X					x	x
	KCs	Ex db IIC T4 Gb Ex tb IIIC T135°C Db	23-AV4BO-0277X 23-AV4BO-0278X					x	x
	CCC	Ex d IIC T4 Gb Ex tD A21 IP66/67 T135°C	No: 2021122315114599					x	x

10 Example labels

Variant 1 - HE200.00.xx.xx.xx.00.000



Variant 2 - HE200.00.xx.xx.xx.01.xxx



Variant 3 - HE200.02.xx.xx.xx.00.000

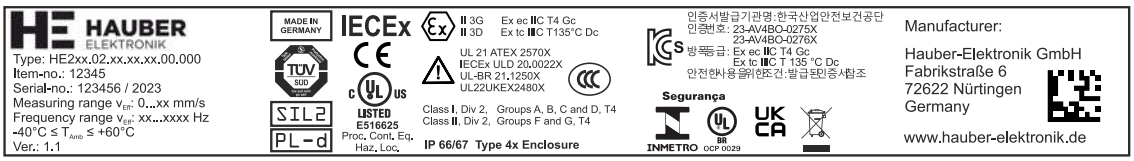

Variant 4 - HE200.02.xx.xx.xx.01.xxx

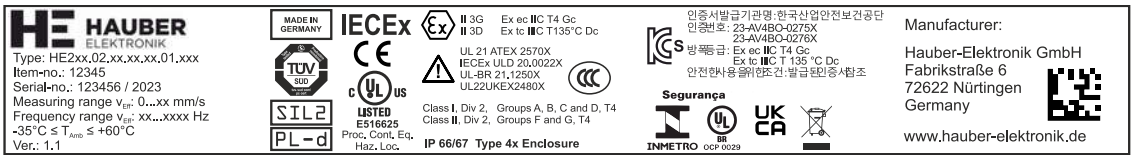

Variant 5 - HE200.01.xx.xx.xx.00.xxx

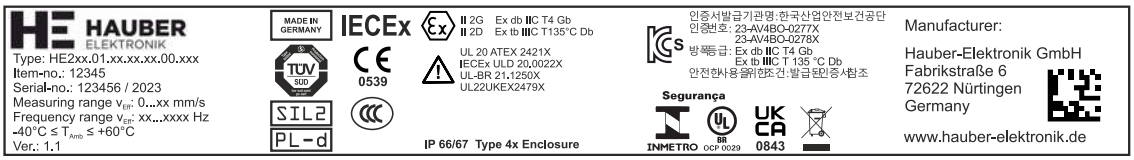

Variant 6 - HE200.01.xx.xx.xx.02.xxx

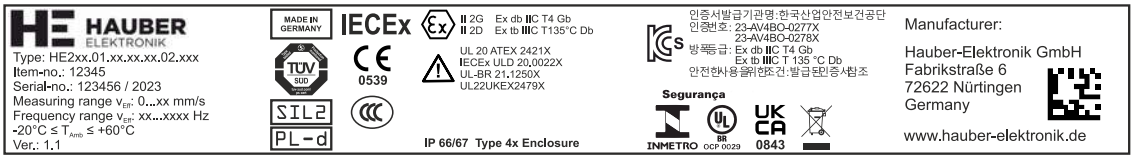

11 Information on the cULus validity range

In order to install the device according to the UL/CSA/IEC standard, the following information must be observed.

Electrical protection



Devices must be protected by means of fuses, circuit breakers, overheating protection, impedance-limiting switches or similar to ensure protection against excessive power output if there is a fault in the device. Protection must be applied to supply lines and switching lines.



A circuit breaker suitable for 30V/3A according to UL Standard 489/CSA Standard (C22.2) no. 5/IEC 60947-2 must be installed near the device.



A fuse suitable according to UL Standard 248/CSA Standard (C22.2) no. 248/IEC 60127 must be installed near the device. The fuse must have a slow triggering characteristic (“T”).

Limited temperature range

The following temperature ranges apply for variants with integrated cable:

Measuring head temperature	-30 °C ≤ T_M ≤ +80° C
Ambient temperature	-30 °C ≤ T_{Amb} ≤ +60° C

12 Functional safety instructions

12.1 Safety level / key indicators

The HE 200 vibration monitoring hardware HE200 was tested by TÜV Süd. The result meet the criteria according to SIL2 and PI-d.

MTTF	984,898 hours = 112.43 years
DC_{avg}	>90%
$MTTF_d$	2,889,526 hours = 329.85 years = **HIGH**
CCF	95 (fulfilled)

Further key indicators and information can be found in the safety manual

12.2 General notes



A reboot of vibration monitoring unit must be performed annually in order to test the switching of potential-free semiconductor switches.



While the sensor is in configuration mode, the safety functions are deactivated.

12.3 Instructions for the Fail Safe State

When the power supply is switched on, the vibration monitoring unit will perform a self-test. During operation, self-tests are performed automatically in cycles. If a self-test fails, the vibration monitoring unit switches to the Fail Safe State.
In the Fail Safe State all status LEDs are lit, all potential-free semiconductor switches are open and the analogue current output supplies 0 mA.

13 Technical data

13.1 General data

Each sensor has one of the listed measuring and frequency ranges. Further ranges on request.
Please indicate the measuring and frequency range in your request.

Measuring range:	0 … 8 mm/s rms 0 … 10 mm/s rms 0 … 16 mm/s rms 0 … 20 mm/s rms 0 … 25 mm/s rms 0 … 32 mm/s rms 0 … 50 mm/s rms 0 … 64 mm/s rms 0 …128 mm/s rms 0 … 1 g rms 0 … 2 g rms 0 … 4 g rms 0 … 6 g rms 0 … 8 g rms 0 … 10 g rms
Measuring accuracy:	± 10% (as per DIN ISO 2954)
Transverse sensitivity:	< 5%
Frequency range:	10 Hz...1000 Hz (standard) 1 Hz...1000 Hz
Calibration point:	159.2 Hz and 90% amplitude of measuring range
Readiness delay:	10 sec Seconds
Maximum acceleration:	±16.5 g
Lifetime:	10 years

Tab. 1: General data

13.2 Electrical data

Output signal:	1 x 4-20 mA (proportional to the measuring range)
semicoductor switches	2 x potential-free semiconductor switches (pre- and main alarm)
switching load:	1A / 30 V DC
Power supply:	21,6…25,6 V DC
Power input (max.):	100 mA
Load/output load (max.):	500 Ω
Automatic:	As soon as the vibration values fall below the limit values, the potential-free semiconductor switches **automatically** become conductive again.

Tab. 2: Electrical data

13.3 Operating range of the vibration monitoring unit

The operating range is independent from the measuring range. It can be derived from the maximum acceleration, which is 16.5 g across all frequencies. The maximum measurable vibration velocity is based on the formula

$$v_{max} = \int a_{max}$$

For sinusoidal vibration, $v_{max} = \frac{a_{max}}{2\pi f}$ applies

Fig. 1: shows the operating range of the vibration monitoring unit, which is limited by the maximum measurable vibration velocity in mm/s depending on the frequency in Hz.

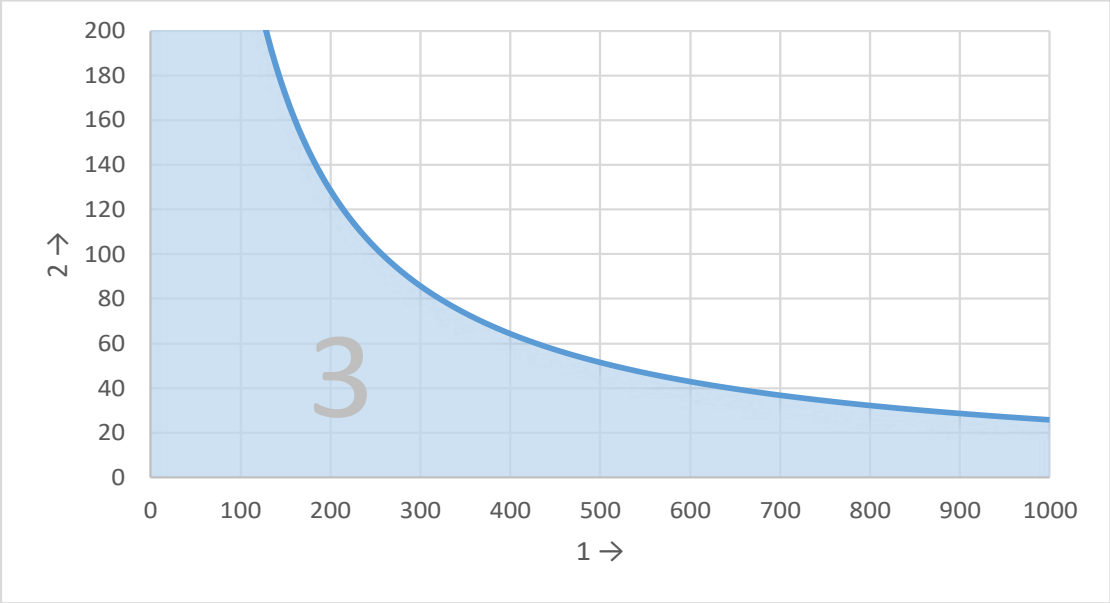

Fig. 1: Operating range diagram

1 Frequency in Hz
2 Vibration velocity in mm/s
3 Operating range of the vibration monitoring unit

Reading example:

Frequency (Hz)	Maximum measurable vibration velocity (mm/s)
250	103
400	64
1000	25

Tab. 3: Reading example of operating range

13.4 Typical frequency response

10 Hz–1,000 Hz (standard)

The frequency response is recorded using a reference sensor.

• 4 Hz. . . 1200 Hz acceleration sensor

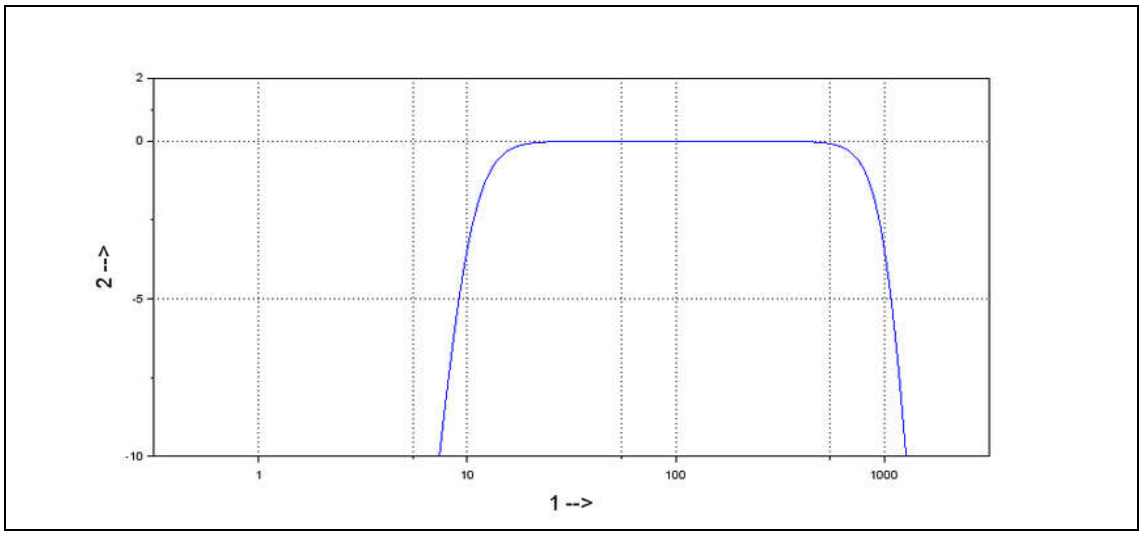

Fig. 2: Typical frequency response 10 Hz–1000 Hz

1 Frequency in Hz

2 Amplification in dB

1 Hz–1000 Hz

The frequency response is recorded using two reference sensors.

- 1 Hz. . . 10 Hz laser sensor
- 10 Hz. . . 1200 Hz acceleration sensor

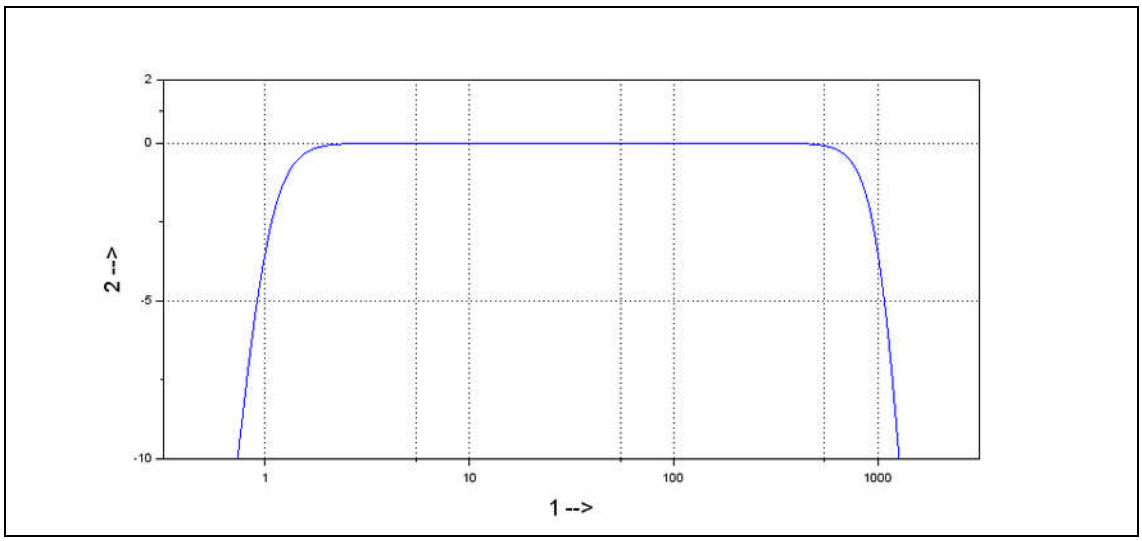

Fig. 3: Typical frequency response 1 Hz–1000 Hz

1 Frequency in Hz

2 Amplification in dB

13.5 Properties of the integrated cable

Cable type	Li9YC11Y 8x0.25 mm²
Conductor material	E-Cu stranded wire
Conductor insulation	PP 9Y
Coating	PUR 11Y Etherbase
Coating diameter	6.0 ± 0.2 mm
Temperature range	-40 °C … +90 °C fixed -20 °C … +90 °C moving
Minimum bending radius	30 mm fixed 60 mm moving
Flame resistant	Yes, according to UL FT2
Halogen-free	Yes, according to VDE 0472 Part 815

Tab. 4: Technical data of the integrated cable

13.6 Mechanical data



Additional materials can be found in section "Coding" on page 33.

Housing material:	Stainless steel V2A, material no.: 1.4305 (standard)
Fastening:	Cylinder head Allen screw M8 x 20 mm Thread pitch: 1.25 mm (standard)
Mounting:	Housing must be earthed via the M8 fastening
Cover tightening torque:	5 Nm
Measuring direction:	Along the fastening axis
Weight:	approx. 500 g
Protection class:	Cover and plug connection closed: IP 66/67 Type 4X enclosure Product is suitable for outdoor use
Max. humidity:	100%

Tab. 5: Mechanical data

13.7 Housing dimensions

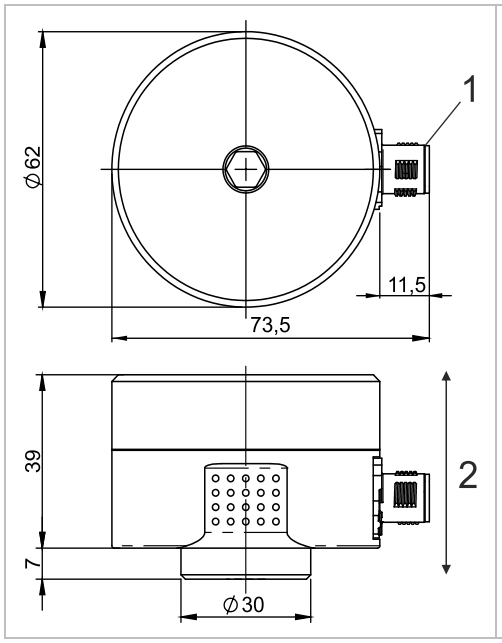

Fig. 4: Housing with M12 connector

1 M12 connector
2 Measuring direction

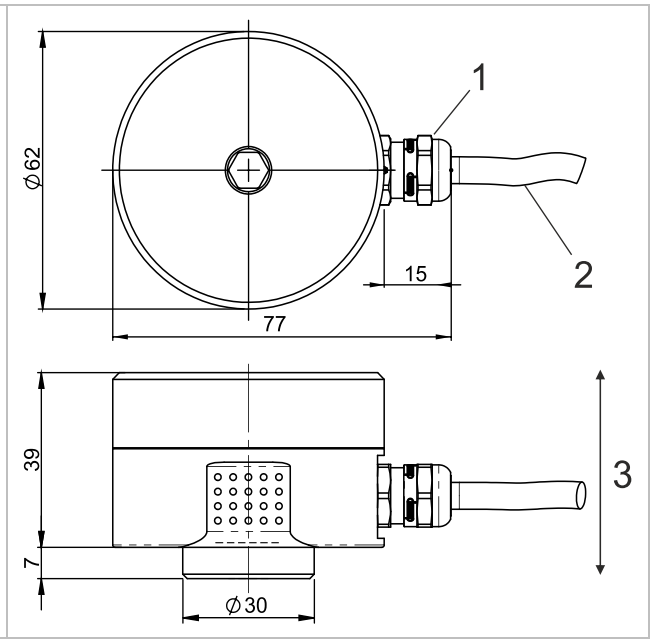

Fig. 5: Housing with integrated cable

1 Cable gland
2 Connecting cable
3 Measuring direction

All measurements in mm

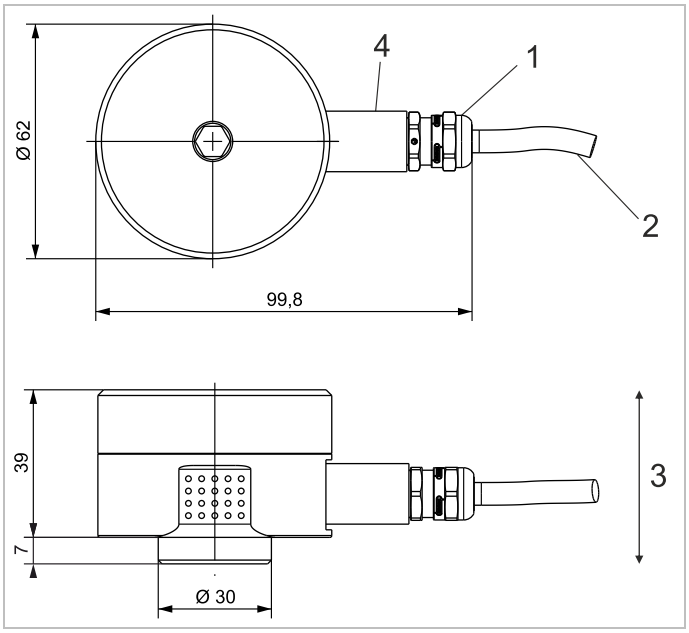

Fig. 6: Housing with integrated cable and clamping sleeve base for metal protection hose

1 Cable gland
2 Connecting cable
3 Measuring direction
4 Clamping sleeve base for metal protection hose

14 Connection

Version:	**M12 connector**		
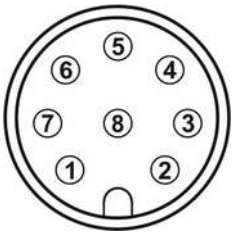	Pin 1:		24 V DC
	Pin 2:		GND
	Pin 3:		4-20 mA output signal
	Pin 4:		NC (Not connected)
	Pin 5:		Potential-free semiconductor switch 1 +
	Pin 6:		Potential-free semiconductor switch 1 -
	Pin 7:		Potential-free semiconductor switch 2 +
	Pin 8:		Potential-free semiconductor switch 2 -
Version:	**Integrated cable**		
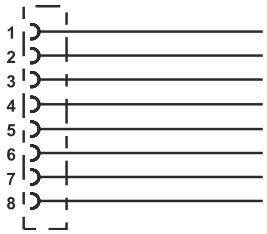	Pin 1:	white	24 V DC
	Pin 2:	brown	GND
	Pin 3:	green	4-20 mA output signal
	Pin 4:	yellow	NC (Not connected)
	Pin 5:	grey	Potential-free semiconductor switch 1 +
	Pin 6:	pink	Potential-free semiconductor switch 1 -
	Pin 7:	blue	Potential-free semiconductor switch 2 +
	Pin 8:	red	Potential-free semiconductor switch 2 -

Wiring diagram:

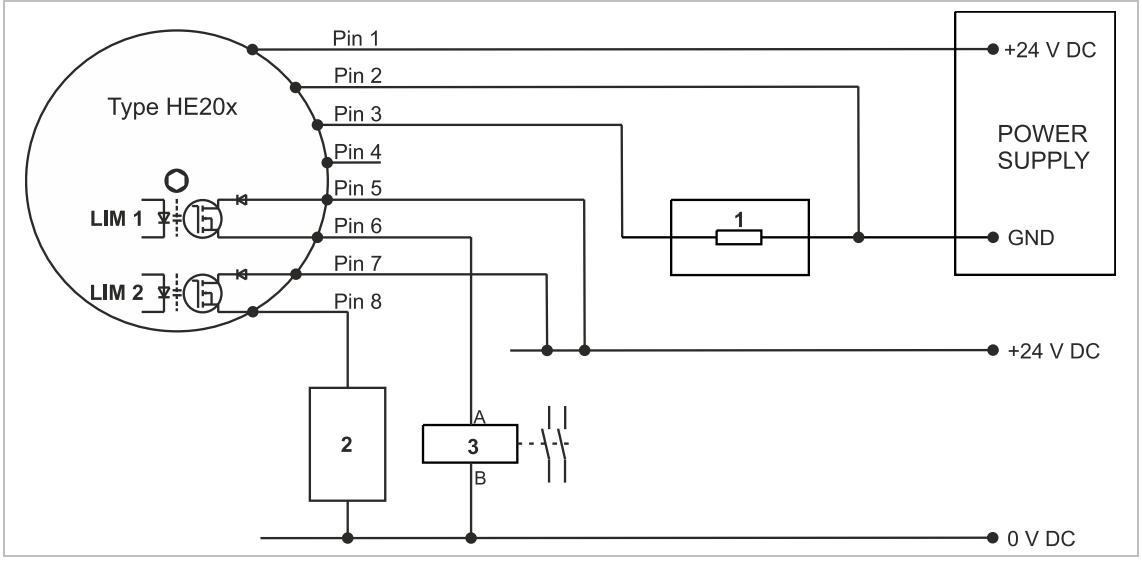

Fig. 7: Wiring diagram

LIM 1 Potential-free semiconductor switch 1 (unidirectional, Pin 5: + , Pin 6: -)
LIM 2 Potential-free semiconductor switch 2 (unidirectional, Pin 5: + , Pin 6: -)
1 Analog Input (4-20mA) of an evaluation unit (e.g. Safety Controller, PLC, …)
2 Application example: Digital in (I/O) of a safety controller
3 Application example: Safety relay

The potential-free semiconductor switches LIM 1 and LIM 2 are blocken (‘opened’) when powered off or in alert state

If the current output (4-20mA) is not required, it should be connected to GND

15 Functional description



In an explosive atmosphere the vibration monitoring unit HE200 will only be opened in a de-energized state.

The HE200 type has two limit values Lim1 and LIM2 and the corresponding delay times, which can be adjusted separately. If the defined limit value is exceeded and after the set delay time has expired, the corresponding potential-free semiconductor switch is opened. This can be used to generate a pre-alarm and a main alarm.
A subsequent fall below the limit value is also signalled at potential-free semiconductor switches 1 and 2, i.e. the respective semiconductor switch automatically closes.
The HE200 type also has an analogue current output. This supplies direct current of 4-20 mA proportional to the vibration amplitude.

15.1 Operating conditions

Operating state	Reading	Semiconductor switches	LED status
OK	≤ Limit value	Closed	green
WARNING	> Limit value, delay time runs	Closed	green + yellow
ALARM	> Limit value, delay time expired	Open	red
Fail Safe State	0 mA	Open	red + yellow + green
De-energized	0 mA	Open	All LEDs off

Tab. 6: Operating conditions

15.2 Alarm and limit setting



While the sensor is in configuration mode, the safety functions are deactivated.

By pressing the "Save Config" button, the current configuration is displayed by the LEDs around the HEX switches. For further information, see chapter "Limit values and delay times” on page 24.

The limit values and delay times are calibrated using the respective HEX switch. As soon as a switch position is changed, all LEDs start flashing. Press and hold the "Save Config" button for three seconds to save the configuration. Acceptance of the configuration is signalled by steady lighting up of the LEDs in the selected HEX switch position.

The configuration can only be accepted if LIM1 ≤ LIM2.

After about five minutes the LEDs turn off automatically.

15.3 Limit values and delay times

The **SET rotary button** has 16 positions, representing the limit value of an alarm. The measuring range of the vibration monitoring unit is divided into 16 linear steps.

In general: $Limit\ value = \frac{Upper\ limit\ measuring\ range}{16} \times SET\ rotary\ button\ position$

Example: Limit setting

Measuring range:	0-32 mm/s
SET rotary button Pos.:	8 (9)
Limit value:	16 mm/s (18 mm/s)

SET-Position ↓	**Limit values (mm/s)**								
Measuring range →	**0 – 8 mm/s**	**0 – 10 mm/s**	**0 – 16 mm/s**	**0 – 20 mm/s**	**0 – 25 mm/s**	**0 – 32 mm/s**	**0 – 50 mm/s**	**0 – 64 mm/s**	**0 – 128 mm/s**
0	0.0	0	0	0	0	0	0.00	0	0
1	0.5	0.625	1	1.25	1.563	2	3.13	4	8
2	1.0	1.25	2	2.5	3.125	4	6.25	8	16
3	1.5	1.875	3	3.75	4.688	6	9.38	12	24
4	2.0	2.5	4	5	6.25	8	12.50	16	32
5	2.5	3.125	5	6.25	7.813	10	15.63	20	40
6	3.0	3.75	6	7.5	9.375	12	18.75	24	48
7	3.5	4.375	7	8.75	10.938	14	21.88	28	56
8	4.0	5	8	10	12.5	16	25.00	32	64
9	4.5	5.625	9	11.25	14.063	18	28.13	36	72
10	5.0	6.25	10	12.5	15.625	20	31.25	40	80
11	5.5	6.875	11	13.75	17.188	22	34.38	44	88
12	6.0	7.5	12	15	18.75	24	37.50	48	96
13	6.5	8.125	13	16.25	20.313	26	40.63	52	104
14	7.0	8.75	14	17.5	21.875	28	43.75	56	112
15	7.5	9.375	15	18.75	23.438	30	46.88	60	120

Tab. 7: Limit values for vibration velocities

SET-Position ↓	Limit values (g)					
Measu-→ ring range	0-1 g	0-2 g	0-4 g	0-6 g	0-8 g	0-10 g
0	0	0	0	0	0	0
1	0.063	0.125	0.25	0.375	0.5	0.625
2	0.125	0.25	0.5	0.75	1	1.25
3	0.188	0.375	0.75	1.125	1.5	1.875
4	0.25	0.5	1	1.5	2	2.5
5	0.313	0.625	1.25	1.875	2.5	3.125
6	0.375	0.75	1.5	2.25	3	3.75
7	0.438	0.875	1.75	2.625	3.5	4.375
8	0.5	1	2	3	4	5
9	0.563	1.125	2.25	3.375	4.5	5.625
10	0.625	1.25	2.5	3.75	5	6.25
11	0.688	1.375	2.75	4.125	5.5	6.875
12	0.75	1.5	3	4.5	6	7.5
13	0.813	1.625	3.25	4.875	6.5	8.125
14	0.875	1.75	3.5	5.25	7	8.75
15	0.938	1.875	3.75	5.625	7.5	9.375

Tab. 8: Vibration acceleration limit values

Delay times

TIME Position	0	1	2	3	4	5	6	7	8	9	10	11	12	13	14	15
Delay time (secs)	0	1	2	3	4	5	7.5	10	12.5	15	17.5	20	25	30	45	60

Tab. 9: Delay times

16 Assembly and disassembly

16.1 General notes

Assembly and disassembly work on and with the monitoring unit may only be performed by an authorised specialist familiar with the safety regulations governing handling electrical components! When using EX-certified monitoring units in potentially explosive atmospheres, the professional must also be familiar with the relevant safety regulations!



Before assembly and disassembly disconnect the monitoring unit from the power supply! Separate plug connections must always be de-energized! If EX-certified monitoring is operated in a potentially explosive atmosphere, there is otherwise an explosion hazard, due to spark formation!



The monitoring unit housing must be earthed via the fastening - through the machine earth of the mounting surface or through a separate protective conductor (PE)!

16.2 Fixing the vibration monitoring unit to the mounting surface

Prerequisites

- Mounting surface is clean and flat; i.e. free of paint, rust, etc.
- Threaded hole in mounting surface: 15 mm, M8

Tools and material

- Hex socket key SW 6, SW 8
- Torque wrench SW 6, SW 8
- Cylinder head screw with hex socket M8x20
- Spring washers for M8

Work steps and instructions

- Unscrew housing cover from housing base;
  hex socket key SW 8
- Attach monitoring unit using cylinder head screws and spring washers with 8 Nm on mounting surface;
  Torque wrench SW 6
- Screw the housing cover back onto the housing base and tighten to 5 Nm;
  Torque wrench SW 8

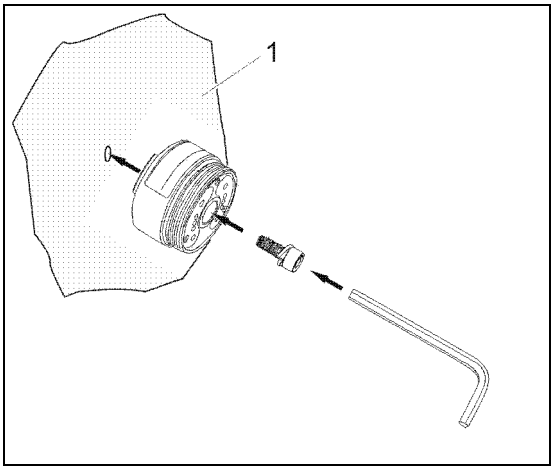

Fastening on mounting surface (1)

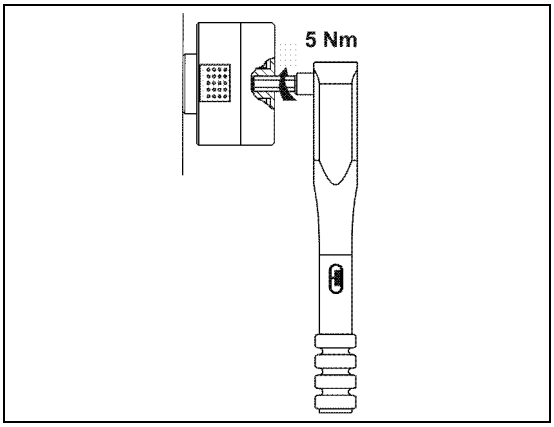

Tighten housing cover with torque wrench (2)



In order to avoid cold welding of the housing cover to the housing base, the thread is treated ex-works with an assembly paste for stainless steel connections.

16.3 Variant HE200.02 (Zone 2 / 22)

The Zone 2/22 variant may not be operated without the safety clip to guard against accidental disconnection of the plug connection! If operated in a potentially explosive atmosphere, there is otherwise an explosion hazard, due to spark formation!

16.3.1 Attaching the safety clip

1. Insert the connecting cable socket into the M12 connector as far as it will go (mind the position of the code cam).
2. Tighten the knurled rotating ring of the socket by hand.
3. Attach the safety clip to guard against accidental disconnection of the plug connection.
   - Place both shell halves of the clip around the plug connection.
   - Press both shell halves firmly together with your hands until the lock snaps into place.
   - Place the arrow connected to the two shell halves around the cable and pull it through the eyelet at the other end so that the notice "DO NOT DISCONNECT UNDER VOLTAGE" can be read alongside the cable.

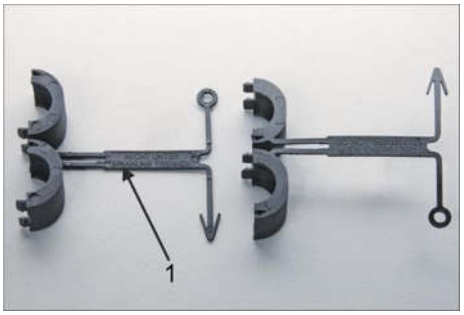

Fig. 8: Safety clip

1 Notice

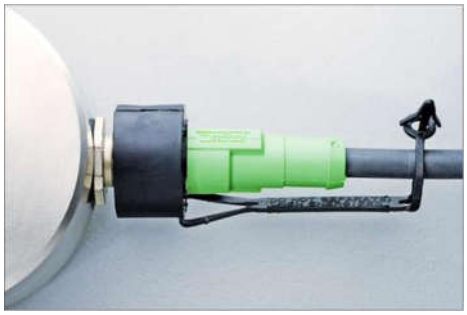

Fig. 9: Attached safety clip

16.3.2 Attaching the protection cap

After disconnecting the plug, the protection cap must be attached to the M12 plug!
Detach the safety clip and attach the protection cap.

1. Disconnect voltage.
2. Pry apart both shell halves of the sleeve with a screwdriver.
3. Close off the M12 plug well with the protection cap.



Fig. 10: Protection cap



Fig. 11: Attached protection cap

16.4 Tamper protection

Attach seal labels

The "SEALED" seal label reveals any unauthorised opening of the housing cover.

After installation of the housing cover by the system operator, the seal label shall be attached to the side above the housing joint.

If any tampering is attempted, the seal label is destroyed and the tampering will be visible to the system operator.

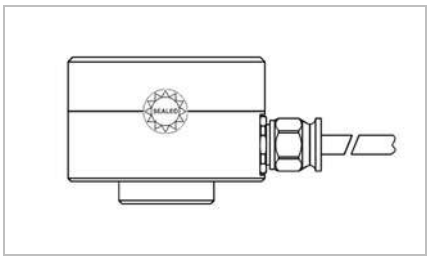

Fig. 12: Seal label

17 Installation and commissioning

17.1 General notes

Installation and commissioning of the vibration monitoring unit may only be performed by an authorised specialist familiar with the safety regulations governing handling electrical components. When installing and commissioning EX-certified monitoring units in potentially explosive atmospheres, the professional must also be familiar with the relevant safety regulations!



The commissioning will only be carried out with the housing cover correctly screwed on (tightening torque = 5 Nm)! If EX-certified monitoring is operated in a potentially explosive atmosphere, there is otherwise an explosion hazard, due to spark formation!



Protect the connection cable and any extension cable from electrical interference and mechanical damage! Local regulations and instructions must be observed in doing so!

17.2 Earthing concept

The earthing concept stipulates that the sensor cable shield is electrically connected to the sensor housing through the knurled nut and is at earth potential on the evaluation unit or the switch cabinet. For longer wires, we recommend separating the disconnecting the shield at the evaluation unit (4) to prevent compensating currents through the shield.

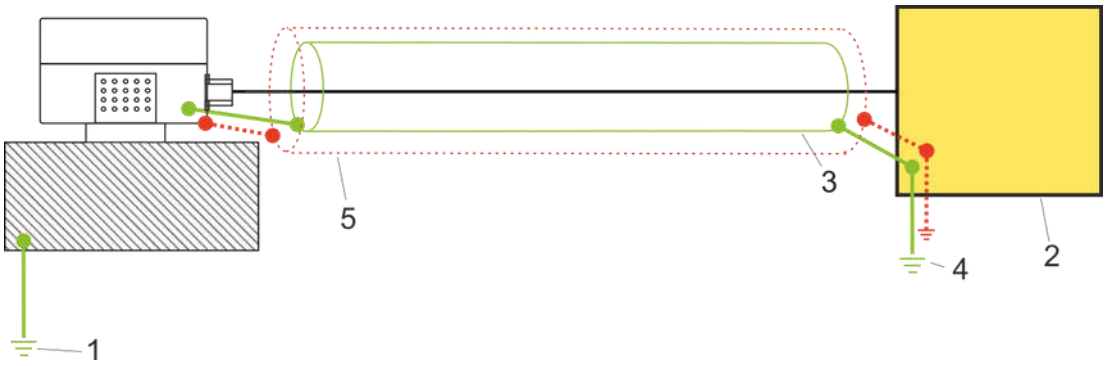

Fig. 13: Earthing concept HE200

1 Machine earth
2 Evaluation unit (measuring instrument, SPS, …)
3 Cable shield
4 Evaluation unit earth potential
5 Optional flexible metal tubing (only available for version with integrated cable)

18 Maintenance and repair

18.1 General notes



Repair and cleaning of vibration monitoring units may only be performed by authorised specialists familiar with the safety regulations for handling electrical components.



Before repair and cleaning, disconnect the monitoring unit from the supply voltage! Detached plug connectors must always be de-energised!



Replace defective connection cables immediately!
A defective vibration monitoring unit must be replaced!



The vibration monitoring unit HE200 is maintenance-free!

18.2 Troubleshooting table

Fault	Cause	Action
No measured value (4-20 mA)	No voltage supply	Check the power source and / or supply line
	Discontinuity in the connecting cable	Replace the connecting cable
	The fuse is faulty	Replace the fuse
	The connection has an incorrect polarity	Pole the connection correctly
	The vibration monitoring unit is faulty	Replace the vibration monitoring unit
	Fail safe state is active	See fault “Fail safe state is active“
The semiconductor switch does not switch	The wrong limit value is set	Set the correct limit value
	No voltage supply	Check the power source and / or supply line
	Discontinuity in connection	Replace the connecting cable
	The fuse is faulty	Replace the fuse
	The connection has an incorrect polarity	Pole the connection correctly
	The monitoring unit is faulty	Replace the monitoring unit
False reading	The vibration monitoring unit is not friction-locked	Mount the vibration monitor with friction-lock
	The vibration monitoring unit is installed in the wrong place	Install the vibration monitoring unit in the correct place
	EMC problems	See "Earthing concept" on page 29.
Fail safe state is active	The voltage supply is outside of specification	Apply a supply voltage of 21.6…25.6 V DC
	The analogue output (Pin 3) is not connected	Connect pin 3. See also Connection, page 20.

Tbl. 10: Troubleshooting table

19 Transport, storage and disposal

The sensor must be protected from damaging environmental factors and mechanical damage during transport with the use of adequate packing.

The sensor may not be stored in ambient temperatures outside the permitted operating temperature.

The product contains electronic components and must be disposed of properly in accordance with local laws and regulations.

20 Coding HE200

HE200.	00.	16.	01.	00.	00.	000

HE series

200 = Monitoring SIL2
4-20 mA ~ mm/s rms + free limit values

ATEX / IECEx / UKEx

00 = no ATEX / IECEx / UKEx
01 = ATEX / IECEx / UKEx (Zone 1 / 21)
02 = ATEX / IECEx / UKEx (Zone 2 / 22) / UL DIV2

Measuring range

8 = 8 mm/s rms
10 = 10 mm/s rms
16 = 16 mm/s rms
20 = 20 mm/s rms
25 = 25 mm/s rms
32 = 32 mm/s rms
50 = 50 mm/s rms
64 = 64 mm/s rms
128 = 128 mm/s rms
1g = 1 g rms
2g = 2 g rms
4g = 4 g rms
6g = 6 g rms
8g = 8 g rms
10g = 10 g rms

Frequency range

00 = 10 – 1000 Hz (standard)
01 = 1 – 1000 Hz

Housing material

00 = 1.4305 (V2A) (standard)
01 = 1.4404 (V4A)
50 = 1.4305 (V2A) with adaptation for metal protection hose
51 = 1.4404 (V4A) with adaptation for metal protection hose

Temperature range

00 = -40°C to 85°C
01 = -35°C to 125°C
02 = -20°C to 125°C

Connection

000 = M12 connector (standard)
020 = 2 m integrated cable
050 = 5 m integrated cable
100 = 10 m integrated cable

Don’t see your desired configuration listed? Please contact us and we c
fer you a solution for your specific needs.

21 EU and UK Declaration of Conformity

Declaration of conformity

HAUBER-Elektronik GmbH
Fabrikstraße 6
D-72622 Nürtingen

declares under our sole responsibility that the products listed below that relate to this declaration meet the basic health and safety requirements of the norms and directives below.

Product series

HE200, HE205

ATEX Annex

UL International Demko A/S certifies as **Notified Body No. 0539** according to the Directive of the Council of the European Community of 26 February 2014 (2014/34/EU) that the manufacturer maintains a quality assurance system for production that complies with **Annex IV** of this Directive.

UKEx Annex

UL International Demko A/S certifies as **Notified Body No. 0843** according to the UK Legislative Decree 2016:1107 of December 8, 2016, that the manufacturer maintains a production quality system that complies with **Annex IV** of this Legislative Decree.

Affixed CE and UKCA marking

CE 0539 UKCA 0843

Norms and directives

EU Directive	Norms
2014/30/EU / UKSI 2016:1091	EN 61000-6-3:2007 + A1:2011 EN 61000-6-2:2005 + AC:2005-09 EN 55011:2016 + A1:2017 + A11:2020
Supplementary:	*EN 61000-6-7:2015*
2014/34/EU / UKSI 2016:1107	EN IEC 60079-0:2018 + AC:2020-02 EN 60079-1:2014 + AC:2018-09 EN IEC 60079-7:2015 + A1:2018 EN 60079-31:2014
2011/65/EU / UKSI 2012:3032	EN IEC 63000:2018

Marking and certificates

HE200.02 / HE205.02

Marking	Certificate
Ex II 3G Ex ec IIC T4 Gc Ex II 3D Ex tc IIIC 135°C Dc	ATEX: UL 21 ATEX 2570 X UKEx: UL22UKEX2480X

HE200.01 / HE205.01

Marking	Certificate
Ex II 2G Ex db IIC T4 Gb Ex II 2D Ex tb IIIC 135°C Db	ATEX: UL 20 ATEX 2421 X Rev. 0 UKEx: UL22UKEX2479X

Signature

Nürtingen, **05/03/2025**

Place and date

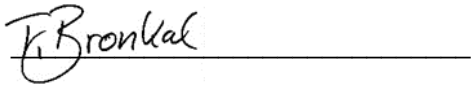

Tobias Bronkal, Managing Owner