# ASCO™ Pneumatic Angle and Straight Seat Valves

2-way, Pressure Operated, Stainless Steel Body and Plastic Actuator
3/8" to 2 1/2" Tapped or with Flanges PN40 (DN15 to DN25) and PN25 (DN32 to DN65)



## Features and Benefits

- *Suitable for a broad range of industrial machines and manufacturing process*
  *High reliability, long service life and exceptional and repeatable tight shutoff*
- *Adjustable actuator enables 360° access to pilot port*
- *Modular design provides exceptional flexibility*
- *Large piloting orifice and low hysteresis creates fast cycle times*
- *Anti-water hammer design and back pressure resistant*
- *Extensive range of actuators, options, certifications and accessories*
- *High performance, maintenance-free actuator and stuffing box*
- *Easy and fast maintenance without the need to remove valve body from pipework*

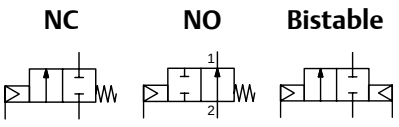




## General

| | |
|---|---|
| **Differential pressure** | See Specifications section [1 bar =100 kPa] |
| **Vacuum** | $10^{-2}$ mbar ($10^{-2}$ Torr/mm Hg) |
| **Maximum allowable pressure** | 16 bar (240 psi)<br>25 bar (360 psi) for «P16» option (PS > 16 bar (240 psi)) |
| **Ambient temperature range** | -10°C to +60°C (14°F to 140°F) |
| **Maximum viscosity** | 800 cSt ($mm^2/s$) (2.700 SSU) |
| **Pilot fluid** | Filtered air or water |
| **Maximum pilot pressure** | 10 bar (150 psi) / bistable function: 8 bar (120 psi) |
| **Minimum pilot pressure** | See Specifications section |
| **Response time** | See dedicated pilot catalog pages |

| Fluids (✶) | Temperature range (TS) (1) | Disc seal (✶) |
|---|---|---|
| Up to DN 50: air and gas groups 1 and 2<br>DN 65: air and gas group 2<br>All DN: liquids and steam groups 1 and 2 | -10°C to +184°C<br>(14°F to 360°F)<br>steam ≤ 184°C/360°F | PTFE |

## Materials of components in contact with fluid

**(✶) Ensure that compatibility of materials in contact with fluids is verified.**

| | Stainless steel | All 316L grade version with body passivation |
|---|---|---|
| **Body** | Stainless steel AISI 316L | Stainless steel AISI 316L |
| **Stuffing box housing** | Stainless steel AISI 316L | Stainless steel AISI 316L |
| **Stem** | Stainless steel AISI 431 | Stainless steel AISI 316L |
| **Disc** | Stainless steel AISI 316L | Stainless steel AISI 316L |
| **Disc seal** | PTFE | PTFE |
| **Wiper seal** | FPM | FPM |
| **Stuffing box packing** | PTFE | PTFE |
| **Valve body seal** | PTFE | PTFE |
| **Angle seat valve** | | |
| **Thread connection** | 3/8" to 2 1/2" (DN10 to DN65) | |
| **Pilot port insert** | Brass or stainless steel AISI 316L | |
| **Straight seat valve** | | |
| **Connection** | Flanges PN40 (DN15 to DN25), PN25 (DN32 to DN65) type 11 (ISO 7005 / EN 1092-1)<br>ANSI Class 150 ASME B16.5 | |
| **Face-to-face dimensions** | EN 558-1 | |
| **Face de joint** | Type B | |
| **Pilot port insert** | Brass or stainless steel AISI 316L | |

## Other components

| | |
|---|---|
| **Actuator** | Glass fiber filled PA |
| **Optical position indicator** | PA 12 |

## Certifications and Approvals

- Pressure Equipment Directive 2014/68/EU, Category 1 (DN > 25) or article 4.3 (DN ≤ 25)
- Functional Safety of Machinery: EN ISO 13849-1
- Reach compliant
- IEC 61508 Standard (2010 route $2_H$ version) certified with integrity levels: SIL 2 for HFT = 0
- The valves satisfy all relevant EU and EAC directives
- RoHS compatible

(1) The minimum ambient temperature of the valve is determined by the limitations of minimum temperature indicated.

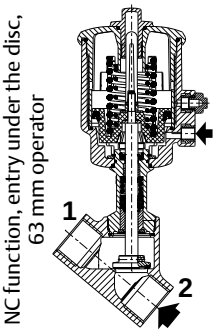


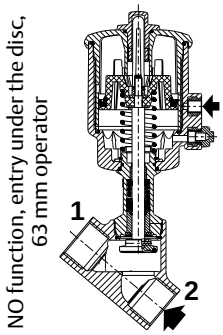


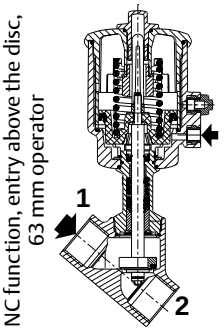


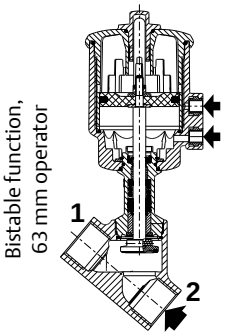


01533GB-2021/R01
Availability, design and specifications are subject to change without notice. All rights reserved.

## Options [1]

- Oxygen service pressure limited to 15 bar (220 psi), media temperature limited to +60°C (140°F)
- Explosive atmospheres, ATEX and IECEx compliant
- Medium vacuum service up to $10^{-3}$ mb ($10^{-3}$ Torr)
- Visual position indicator for 32 mm and 50 mm actuators (standard position indicators for other actuator sizes)
- EN 161/EN 16678 compliant versions (see dedicated catalog pages)
- Pilots (see dedicated catalog pages)
- Large range of switch boxes and digital positioners (see dedicated catalog pages)
- Valve body material composition certificate 3.1

[1] See Choice of options and accessories (page 14)

## Specifications (angle seat valves)

| Piping (ISO 6708) | | Flow coefficient Kv (Cv) | | Pilot pressure bar (psi) | | Operating pressure differential bar (psi) | | | Actuator diameter | Dimensions / Type [1] | Catalog number | |
|---|---|---|---|---|---|---|---|---|---|---|---|---|
| Pipe size | DN | | | | | Air, inert gas (*) | Water, oil, liquids (*) | Steam (*) | | | Thread type | |
| | | m³/h (gal/min) | (l/min) | Min. | Max. | | | | (mm) | | (G*) | (NPTF) |
| **NC - Normally closed, entry under the disc** | | | | | | | | | | | | |
| 3/8" | 10 | 2.8 (3.2) | 46 | 4.7 (75) | 10 (150) | 16 (240) | 16 (240) | 10 (150) | 32 | 01 | **E290D0110SA0000** | **8290D0120SA0000** |
| 1/2" | 15 | 4.1 (4.7) | 68 | 4.7 (75) | 10 (150) | 10 (150) | 10 (150) | 10 (150) | 32 | 01 | **E290D0210SA0000** | **8290D0220SA0000** |
| | | 5.8 (6.7) | 96 | 4.5 (70) | 10 (150) | 16 (240) | 16 (240) | 10 (150) | 50 | 02 | **E290D0230SA0000** | **8290D0240SA0000** |
| | | | | 5.5 (80) | | 25 (360) | 25 (360) | 10 (150) | 50 | 02 | **E290D0230SP1600** | **8290D0240SP1600** |
| | | | | 2.8 (45) | 10 (150) | 16 (240) | 16 (240) | 10 (150) | 63 | 03 | **E290D0250SA0000** | **8290D0260SA0000** |
| | | | | 4.5 (70) | | 25 (360) | 25 (360) | 10 (150) | 63 | 03 | **E290D0250SP1600** | **8290D0260SP1600** |
| 3/4" | 20 | 6.5 (7.5) | 108 | 4.7 (75) | 10 (150) | 6 (90) | 6 (90) | 6 (90) | 32 | 01 | **E290D0310SA0000** | **8290D0320SA0000** |
| | | 10.7 (12.4) | 178 | 4.5 (70) | 10 (150) | 10 (150) | 10 (150) | 10 (150) | 50 | 02 | **E290D0330SA0000** | **8290D0340SA0000** |
| | | | | 5.5 (80) | | 14 (210) | 14 (210) | 10 (150) | 50 | 02 | **E290D0330SP1600** | **8290D0340SP1600** |
| | | | | 4.5 (70) | 10 (150) | 16 (240) | 16 (240) | 10 (150) | 63 | 03 | **E290D0350SA0000** | **8290D0360SA0000** |
| | | | | 2.8 (45) | | 12 (180) | 12 (180) | 10 (150) | 63 | 03 | **E290D7350SA0000** | **8290D7360SA0000** |
| | | | | 4.5 (70) | | 20 (300) | 20 (300) | 10 (150) | 63 | 03 | **E290D0350SP1600** | **8290D0360SP1600** |
| 1" | 25 | 15.5 (18) | 258 | 4.5 (70) | 10 (150) | 6 (90) | 6 (90) | 6 (90) | 50 | 01 | **E290D0430SA0000** | **8290D0440SA0000** |
| | | | | 5.5 (80) | | 9 (135) | 9 (135) | 9 (135) | 50 | 01 | **E290D0430SP1600** | **8290D0440SP1600** |
| | | 17.7 (20.5) | 295 | 4.5 (70) | 10 (150) | 10 (150) | 10 (150) | 10 (150) | 63 | 03 | **E290D0450SA0000** | **8290D0460SA0000** |
| | | 17.8 (20.6) | 296 | 4.5 (70) | 10 (150) | 16 (240) | 16 (240) | 10 (150) | 90 | 04 | **E290D04B0SA0000** | **8290D04C0SA0000** |
| | | 17.7 (20.5) | 295 | 2.8 (45) | 10 (150) | 6 (90) | 6 (90) | 6 (90) | 63 | 03 | **E290D7450SA0000** | **8290D7460SA0000** |
| | | 17.8 (20.6) | 296 | 2.8 (45) | 10 (150) | 12 (180) | 12 (180) | 10 (150) | 90 | 04 | **E290D74B0SA0000** | **8290D74C0SA0000** |
| | | | | 4.5 (70) | | 25 (360) | 25 (360) | 10 (150) | 90 | 04 | **E290D04B0SP1600** | **8290D04C0SP1600** |

(*) Ensure that compatibility of materials in contact with fluids is verified.
[1] For dimensions, see drawing(s) for each construction type on the following page(s).

01533GB-2021/R01
Availability, design and specifications are subject to change without notice. All rights reserved.

# ASCO™ Pneumatic Angle and Straight Seat Valves

## Specifications (angle seat valves)

| Piping (ISO 6708) | | Flow coefficient Kv (Cv) | | Pilot pressure bar (psi) | | Operating pressure differential bar (psi) | | | Actuator diameter | Dimensions / Type (1) | Catalog number | |
|---|---|---|---|---|---|---|---|---|---|---|---|---|
| Pipe size | DN | | | | | Air, inert gas (✶) | Water, oil, liquids (✶) | Steam (✶) | | | Thread type | |
| | | $m^3/h$ (gal/min) | (l/min) | Min. | Max. | | | | (mm) | | (G*) | (NPTF) |
| 1 1/4” | 32 | 25.2 (29.2) | 420 | 4.5 (70) | 10 (150) | 6 (90) | 6 (90) | 6 (90) | 63 | 03 | E290D0550SA0000 | 8290D0560SA0000 |
| | | 26.2 (30.4) | 436 | 4.5 (70) | | 12 (180) | 12 (180) | 10 (150) | 90 | 04 | E290D05B0SA0000 | 8290D05C0SA0000 |
| | | 25.2 (29.2) | 420 | 2.8 (45) | | 3 (45) | 3 (45) | 3 (45) | 63 | 03 | E290D7550SA0000 | 8290D7560SA0000 |
| | | 26.2 (30.4) | 436 | 2.8 (45) | | 7 (105) | 7 (105) | 7 (105) | 90 | 04 | E290D75B0SA0000 | 8290D75C0SA0000 |
| | | 30.5 (35.3) | 508 | 4 (60) | | 16 (240) | 16 (240) | 10 (150) | 125 | 05 | E290D05H0SA0000 | 8290D05J0SA0000 |
| 1 1/2” | 40 | 38.3 (44.4) | 638 | 4.5 (70) | 10 (150) | 4 (60) | 4 (60) | 4 (60) | 63 | 03 | E290D0650SA0000 | 8290D0660SA0000 |
| | | 40.4 (46.9) | 673 | 4.5 (70) | | 8 (120) | 8 (120) | 8 (120) | 90 | 04 | E290D06B0SA0000 | 8290D06C0SA0000 |
| | | 46.1 (53.5) | 768 | 4 (60) | | 16 (240) | 16 (240) | 10 (150) | 125 | 05 | E290D06H0SA0000 | 8290D06J0SA0000 |
| | | 40.4 (46.9) | 673 | 2.8 (45) | | 4 (60) | 4 (60) | 4 (60) | 90 | 04 | E290D76B0SA0000 | 8290D76C0SA0000 |
| | | 46.1 (53.5) | 768 | 2.5 (40) | | 10 (150) | 10 (150) | 10 (150) | 125 | 05 | E290D76H0SA0000 | 8290D76J0SA0000 |
| 2” | 50 | 51.4 (59.7) | 857 | 4.5 (70) | 10 (150) | 2.5 (40) | 2.5 (40) | 2.5 (40) | 63 | 03 | E290D0750SA0000 | 8290D0760SA0000 |
| | | 54.9 (63.7) | 915 | 4.5 (70) | | 6 (90) | 6 (90) | 6 (90) | 90 | 04 | E290D07B0SA0000 | 8290D07C0SA0000 |
| | | 67.7 (78.5) | 1128 | 4 (60) | | 10 (150) | 10 (150) | 10 (150) | 125 | 05 | E290D07H0SA0000 | 8290D07J0SA0000 |
| | | | | 2.5 (40) | | 5 (75) | 5 (75) | 5 (75) | 125 | 05 | E290D77H0SA0000 | 8290D77J0SA0000 |
| 2 1/2” | 65 | 94 (109) | 1566 | 4.5 (70) | 10 (150) | 2 (30) | 2 (30) | 2 (30) | 90 | 04 | E290D08B0SA0000 | 8290D08C0SA0000 |
| | | 111 (128.8) | 1850 | 4 (60) | | 6 (90) | 6 (90) | 6 (90) | 125 | 05 | E290D08H0SA0000 | 8290D08J0SA0000 |
| **NO - Normally open, entry under the disc** | | | | | | | | | | | | |
| 3/8” | 10 | 2.8 (3.2) | 46 | IX (*) | 10 (150) | 16 (240) | 16 (240) | 10 (150) | 32 | 01 | E290D1110SA0000 | 8290D1120SA0000 |
| 1/2” | 15 | 4.1 (4.7) | 68 | IX (*) | 10 (150) | 16 (240) | 16 (240) | 10 (150) | 32 | 01 | E290D1210SA0000 | 8290D1220SA0000 |
| | | 5.8 (6.7) | 96 | I (*) | 10 (150) | 16 (240) | 16 (240) | 10 (150) | 50 | 02 | E290D1230SA0000 | 8290D1240SA0000 |
| | | | | II (*) | | 16 (240) | 16 (240) | 10 (150) | 63 | 03 | E290D1250SA0000 | 8290D1260SA0000 |
| 3/4” | 20 | 6.5 (7.5) | 108 | IX (*) | 10 (150) | 16 (240) | 16 (240) | 10 (150) | 32 | 01 | E290D1310SA0000 | 8290D1320SA0000 |
| | | 10.7 (12.4) | 178 | I (*) | 10 (150) | 16 (240) | 16 (240) | 10 (150) | 50 | 02 | E290D1330SA0000 | 8290D1340SA0000 |
| | | | | II (*) | | 16 (240) | 16 (240) | 10 (150) | 63 | 03 | E290D1350SA0000 | 8290D1360SA0000 |

(✶) Ensure that compatibility of materials in contact with fluids is verified.
(*) Minimum pilot pressure varies with differential pressure, see page **13**
(1) For dimensions, see drawing(s) for each construction type on the following page(s).

01533GB-2021/R01
Availability, design and specifications are subject to change without notice. All rights reserved.

*

## Specifications (angle seat valves)

| Piping (ISO 6708) | | Flow coefficient Kv (Cv) | | Pilot pressure bar (psi) | | Operating pressure differential bar (psi) | | | Actuator diameter | Dimensions / Type (1) | Catalog number | |
|---|---|---|---|---|---|---|---|---|---|---|---|---|
| Pipe size | DN | | | | | Air, inert gas (✶) | Water, oil, liquids (✶) | Steam (✶) | | | Thread type | |
| | | m³/h (gal/min) | (l/min) | Min. | Max. | | | | (mm) | | (G*) | (NPTF) |
| 1” | 25 | 15.5 (18) | 258 | I (*) | 10 (150) | 16 (240) | 16 (240) | 10 (150) | 50 | 02 | E290D1430SA0000 | 8290D1440SA0000 |
| | | 17.7 (20.5) | 295 | II (*) | | 16 (240) | 16 (240) | 10 (150) | 63 | 03 | E290D1450SA0000 | 8290D1460SA0000 |
| | | 17.8 (20.6) | 296 | III (*) | | 16 (240) | 16 (240) | 10 (150) | 90 | 04 | E290D14B0SA0000 | 8290D14C0SA0000 |
| 1 1/4” | 32 | 25.2 (29.2) | 420 | II (*) | 10 (150) | 16 (240) | 16 (240) | 10 (150) | 63 | 03 | E290D1550SA0000 | 8290D1560SA0000 |
| | | 26.2 (30.4) | 436 | III (*) | | 16 (240) | 16 (240) | 10 (150) | 90 | 04 | E290D15B0SA0000 | 8290D15C0SA0000 |
| | | 30.5 (35.4) | 508 | IV (*) | | 16 (240) | 16 (240) | 10 (150) | 125 | 05 | E290D15H0SA0000 | 8290D15J0SA0000 |
| 1 1/2” | 40 | 38.3 (44.4) | 638 | II (*) | 10 (150) | 11 (165) | 11 (165) | 10 (150) | 63 | 03 | E290D1650SA0000 | 8290D1660SA0000 |
| | | 40.4 (46.9) | 673 | III (*) | | 16 (240) | 16 (240) | 10 (150) | 90 | 04 | E290D16B0SA0000 | 8290D16C0SA0000 |
| | | 46.1 (53.5) | 768 | IV (*) | | 16 (240) | 16 (240) | 10 (150) | 125 | 05 | E290D16H0SA0000 | 8290D16J0SA0000 |
| 2” | 50 | 51.4 (59.7) | 857 | II (*) | 10 (150) | 7 (105) | 7 (105) | 7 (105) | 63 | 03 | E290D1750SA0000 | 8290D1760SA0000 |
| | | 54.9 (63.7) | 915 | III (*) | | 13 (200) | 13 (200) | 10 (150) | 90 | 04 | E290D17B0SA0000 | 8290D17C0SA0000 |
| | | 67.7 (78.5) | 1128 | IV (*) | | 16 (240) | 16 (240) | 10 (150) | 125 | 05 | E290D17H0SA0000 | 8290D17J0SA0000 |
| 2 1/2” | 65 | 94 (109) | 1566 | III (*) | 10 (150) | 7 (105) | 7 (105) | 7 (105) | 90 | 04 | E290D18B0SA0000 | 8290D18C0SA0000 |
| | | 111 (128.8) | 1850 | IV (*) | | 16 (240) | 16 (240) | 10 (150) | 125 | 05 | E290D18H0SA0000 | 8290D18J0SA0000 |
| **NC - Normally closed, entry above the disc (version recommended for rapid-cycling steam applications)** | | | | | | | | | | | | |
| 3/8” | 10 | 2.8 (3.2) | 46 | X (*) | 10 (150) | 10 (150) | - | 10 (150) | 32 | 01 | E290D3110SA0000 | 8290D3120SA0000 |
| 1/2” | 15 | 4.1 (4.7) | 68 | X (*) | 10 (150) | 10 (150) | - | 10 (150) | 32 | 01 | E290D3210SA0000 | 8290D3220SA0000 |
| | | 5.1 (5.9) | 85 | V (*) | 10 (150) | 10 (150) | - | 10 (150) | 50 | 02 | E290D3230SA0000 | 8290D3240SA0000 |
| | | 6.1 (7.1) | 101 | VI (*) | 10 (150) | 10 (150) | - | 10 (150) | 63 | 03 | E290D3250SA0000 | 8290D3260SA0000 |
| 3/4” | 20 | 6.5 (7.5) | 108 | X (*) | 10 (150) | 10 (150) | - | 10 (150) | 32 | 01 | E290D3310SA0000 | 8290D3320SA0000 |
| | | 10.3 (11.9) | 171 | V (*) | 10 (150) | 10 (150) | - | 10 (150) | 50 | 02 | E290D3330SA0000 | 8290D3340SA0000 |
| | | 11 (12.8) | 183 | VI (*) | | 10 (150) | - | 10 (150) | 63 | 03 | E290D3350SA0000 | 8290D3360SA0000 |
| 1” | 25 | 14.6 (16.9) | 243 | V (*) | 10 (150) | 10 (150) | - | 10 (150) | 50 | 02 | E290D3430SA0000 | 8290D3440SA0000 |
| | | 18.4 (21.3) | 306 | VI (*) | | 10 (150) | - | 10 (150) | 63 | 03 | E290D3450SA0000 | 8290D3460SA0000 |
| 1 1/4” | 32 | 30.7 (35.6) | 511 | VI (*) | 10 (150) | 10 (150) | - | 10 (150) | 63 | 03 | E290D3550SA0000 | 8290D3560SA0000 |
| | | 31 (36) | 516 | VII (*) | | 10 (150) | - | 10 (150) | 90 | 04 | E290D35B0SA0000 | 8290D35C0SA0000 |

(✶) Ensure that compatibility of materials in contact with fluids is verified.
(*) Minimum pilot pressure varies with differential pressure, see page **13**
(1) For dimensions, see drawing(s) for each construction type on the following page(s).

01533GB-2021/R01
Availability, design and specifications are subject to change without notice. All rights reserved.

# ASCO™ Pneumatic Angle and Straight Seat Valves

## Specifications (angle seat valves)

| Piping (ISO 6708) | | Flow coefficient Kv (Cv) | | Pilot pressure bar (psi) | | Operating pressure differential bar (psi) | | | Actuator diameter | Dimensions / Type (1) | Catalog number | |
|---|---|---|---|---|---|---|---|---|---|---|---|---|
| Pipe size | DN | | | | | Air, inert gas (✶) | Water, oil, liquids (✶) | Steam (✶) | | | Thread type | |
| | | m³/h (gal/min) | (l/min) | Min. | Max. | | | | (mm) | | (G*) | (NPTF) |
| 1 1/2” | 40 | 43.9 (50.9) | 731 | VI (*) | 10 (150) | 10 (150) | - | 10 (150) | 63 | 03 | E290D3650SA0000 | 8290D3660SA0000 |
| | | 45 (52.2) | 750 | VII (*) | | 10 (150) | - | 10 (150) | 90 | 04 | E290D36B0SA0000 | 8290D36C0SA0000 |
| 2” | 50 | 58 (67.3) | 966 | VI (*) | 10 (150) | 9 (135) | - | 9 (135) | 63 | 03 | E290D3750SA0000 | 8290D3760SA0000 |
| | | 59 (68.4) | 983 | VII (*) | | 10 (150) | - | 10 (150) | 90 | 04 | E290D37B0SA0000 | 8290D37C0SA0000 |
| 2 1/2” | 65 | 94 (109) | 1566 | VII (*) | 10 (150) | 10 (150) | - | 10 (150) | 90 | 04 | E290D38B0SA0000 | 8290D38C0SA0000 |
| **Bistable function (version recommended for high fast cycling)** | | | | | | | | | | | | |
| 3/8” | 10 | 2.8 (3.2) | 46 | XII (*) | 8 (120) | 10 (150) | 10 (150) | - | 32 | 01 | E290D4110SA0000 | 8290D4120SA0000 |
| 1/2” | 15 | 4.1 (4.7) | 68 | XII (*) | 8 (120) | 10 (150) | 10 (150) | - | 32 | 01 | E290D4210SA0000 | 8290D4220SA0000 |
| | | 5.8 (6.7) | 96 | X (*) | 8 (120) | 10 (150) | 10 (150) | - | 50 | 02 | E290D4230SA0000 | 8290D4240SA0000 |
| | | | | XI (*) | 8 (120) | 10 (150) | 10 (150) | - | 63 | 03 | E290D4250SA0000 | 8290D4260SA0000 |
| 3/4” | 20 | 6.5 (7.5) | 108 | XII (*) | 8 (120) | 10 (150) | 10 (150) | - | 32 | 01 | E290D4310SA0000 | 8290D4320SA0000 |
| | | 10.7 (12.4) | 178 | X (*) | 8 (120) | 10 (150) | 10 (150) | - | 50 | 02 | E290D4330SA0000 | 8290D4340SA0000 |
| | | | | XI (*) | 8 (120) | 10 (150) | 10 (150) | - | 63 | 03 | E290D4350SA0000 | 8290D4360SA0000 |
| 1” | 25 | 15.5 (18) | 258 | X (*) | 8 (120) | 10 (150) | 10 (150) | - | 50 | 02 | E290D4430SA0000 | 8290D4440SA0000 |
| | | 17.7 (20.5) | 295 | XI (*) | 8 (120) | 10 (150) | 10 (150) | - | 63 | 03 | E290D4450SA0000 | 8290D4460SA0000 |

## Specifications (straight seat valves)

| Piping (ISO 6708) | | Flow coefficient Kv (Cv) | | Pilot pressure bar (psi) | | Operating pressure differential bar (psi) | | | Actuator diameter | Dimensions / Type (1) | Catalog number | |
|---|---|---|---|---|---|---|---|---|---|---|---|---|
| Pipe size | DN | | | | | Air, inert gas (✶) | Water, oil, liquids (✶) | Steam (✶) | | | Flange type | |
| | | m³/h (gal/min) | (l/min) | Min. | Max. | | | | (mm) | | DIN EN 1092-1 | ANSI 150 ASME B16.5 |
| **NC - Normally closed, entry under the disc** | | | | | | | | | | | | |
| 1/2” | 15 | 4.4 (5.1) | 73 | 4.5 (70) | 10 (150) | 16 (240) | 16 (240) | 10 (150) | 50 | 02 | T290D023DSA0000 | T290D024PSA0000 |
| | | | | 5.5 (80) | | 25 (360) | 25 (360) | 10 (150) | 50 | 02 | T290D023DSP1600 | T290D024PSP1600 |
| | | | | 2.8 (45) | 10 (150) | 16 (240) | 16 (240) | 10 (150) | 63 | 03 | T290D025DSA0000 | T290D026PSA0000 |
| | | | | 4.5 (70) | | 25 (360) | 25 (360) | 10 (150) | 63 | 03 | T290D025DSP1600 | T290D026PSP1600 |

(✶) Ensure that compatibility of materials in contact with fluids is verified.
(*) Minimum pilot pressure varies with differential pressure, see page **13**
(1) For dimensions, see drawing(s) for each construction type on the following page(s).

01533GB-2021/R01
Availability, design and specifications are subject to change without notice. All rights reserved.

## Specifications (straight seat valves)

| Piping (ISO 6708) | | Flow coefficient Kv (Cv) | | Pilot pressure bar (psi) | | Operating pressure differential bar (psi) | | | Actuator diameter | Dimensions / Type (1) | Catalog number | |
|---|---|---|---|---|---|---|---|---|---|---|---|---|
| Pipe size | DN | | | | | Air, inert gas (✶) | Water, oil, liquids (✶) | Steam (✶) | | | Flange type | |
| | | m³/h (gal/min) | (l/min) | Min. | Max. | | | | (mm) | | DIN EN 1092-1 | ANSI 150 ASME B16.5 |
| 3/4” | 20 | 7.2 (8.3) | 120 | 4.5 (70) | 10 (150) | 10 (150) | 10 (150) | 10 (150) | 50 | 02 | T290D033DSA0000 | T290D034PSA0000 |
| | | | | 5.5 (80) | 10 (150) | 14 (210) | 14 (210) | 10 (150) | 50 | 02 | T290D033DSP1600 | T290D034PSP1600 |
| | | 7.2 (8.3) | 120 | 4.5 (70) | 10 (150) | 16 (240) | 16 (240) | 10 (150) | 63 | 03 | T290D035DSA0000 | T290D036PSA0000 |
| | | | | 2.8 (45) | 10 (150) | 12 (180) | 12 (180) | 10 (150) | 63 | 03 | T290D735DSA0000 | T290D736PSA0000 |
| | | | | 4.5 (70) | 10 (150) | 20 (300) | 20 (300) | 10 (150) | 63 | 03 | T290D035DSP1600 | T290D036PSP1600 |
| 1” | 25 | 11.2 (12.9) | 186 | 4.5 (70) | 10 (150) | 6 (90) | 6 (90) | 6 (90) | 50 | 02 | T290D043DSA0000 | T290D044PSA0000 |
| | | | | 5.5 (80) | | 9 (135) | 9 (135) | 9 (135) | 50 | 02 | T290D043DSP1600 | T290D044PSP1600 |
| | | 12.1 (14) | 201 | 4.5 (70) | 10 (150) | 10 (150) | 10 (150) | 10 (150) | 63 | 03 | T290D045DSA0000 | T290D046PSA0000 |
| | | 12.9 (14,9) | 215 | 4.5 (70) | 10 (150) | 16 (240) | 16 (240) | 10 (150) | 90 | 04 | T290D04BDSA0000 | T290D04CPSA0000 |
| | | 12.1 (14) | 201 | 2.8 (45) | 10 (150) | 6 (90) | 6 (90) | 6 (90) | 63 | 03 | T290D745DSA0000 | T290D746PSA0000 |
| | | 12.9 (14,9) | 215 | 2,8 (45) | 10 (150) | 12 (180) | 12 (180) | 10 (150) | 90 | 04 | T290D74BDSA0000 | T290D74CPSA0000 |
| | | | | 4.5 (70) | | 25 (360) | 25 (360) | 10 (150) | 90 | 04 | T290D04BDSP1600 | T290D04CPSP1600 |
| 1 1/4” | 32 | 19 (22) | 316 | 4.5 (70) | 10 (150) | 6 (90) | 6 (90) | 6 (90) | 63 | 03 | T290D055DSA0000 | T290D056PSA0000 |
| | | 19.4 (22.5) | 323 | 4.5 (70) | 10 (150) | 12 (180) | 12 (180) | 10 (150) | 90 | 04 | T290D05BDSA0000 | T290D05CPSA0000 |
| | | 19 (22) | 316 | 2.8 (45) | 10 (150) | 3 (45) | 3 (45) | 3 (45) | 63 | 03 | T290D755DSA0000 | T290D756PSA0000 |
| | | 19.4 (22.5) | 323 | 2.8 (45) | 10 (150) | 7 (105) | 7 (105) | 7 (105) | 90 | 04 | T290D75BDSA0000 | T290D75CPSA0000 |
| | | | | 4 (60) | 10 (150) | 16 (240) | 16 (240) | 10 (150) | 125 | 05 | T290D05HDSA0000 | T290D05JPSA0000 |
| 1 1/2” | 40 | 27.3 (31.6) | 455 | 4.5 (70) | 10 (150) | 4 (60) | 4 (60) | 4 (60) | 63 | 03 | T290D065DSA0000 | T290D066PSA0000 |
| | | 27.4 (31.7) | 456 | 4.5 (70) | 10 (150) | 8 (120) | 8 (120) | 8 (120) | 90 | 04 | T290D06BDSA0000 | T290D06CPSA0000 |
| | | 27.6 (32) | 460 | 4 (60) | 10 (150) | 16 (240) | 16 (240) | 10 (150) | 125 | 05 | T290D06HDSA0000 | T290D06JPSA0000 |
| | | 27.4 (31.7) | 456 | 2.8 (45) | 10 (150) | 4 (60) | 4 (60) | 4 (60) | 90 | 04 | T290D76BDSA0000 | T290D76CPSA0000 |
| | | 27.6 (32) | 460 | 2.5 (40) | 10 (150) | 10 (150) | 10 (150) | 10 (150) | 125 | 05 | T290D76HDSA0000 | T290D76JPSA0000 |
| 2” | 50 | 39.7 (46) | 661 | 4.5 (70) | 10 (150) | 2.5 (40) | 2.5 (40) | 2.5 (40) | 63 | 03 | T290D075DSA0000 | T290D076PSA0000 |
| | | 40.8 (47.3) | 680 | 4.5 (70) | 10 (150) | 6 (90) | 6 (90) | 6 (90) | 90 | 04 | T290D07BDSA0000 | T290D07CPSA0000 |
| | | 40.9 (47.4) | 681 | 4 (60) | 10 (150) | 10 (150) | 10 (150) | 10 (150) | 125 | 05 | T290D07HDSA0000 | T290D07JPSA0000 |
| | | | | 2.5 (40) | | 5 (75) | 5 (75) | 5 (75) | 125 | 05 | T290D77HDSA0000 | T290D77JPSA0000 |

(✶) Ensure that compatibility of materials in contact with fluids is verified.
(*) Minimum pilot pressure varies with differential pressure, see page **13**
(1) For dimensions, see drawing(s) for each construction type on the following page(s).

01533GB-2021/R01
Availability, design and specifications are subject to change without notice. All rights reserved.

# ASCO™ Pneumatic Angle and Straight Seat Valves

## Specifications (straight seat valves)

| Piping (ISO 6708) | | Flow coefficient Kv (Cv) | | Pilot pressure bar (psi) | | Operating pressure differential bar (psi) | | | Actuator diameter | Dimensions / Type (1) | Catalog number | |
|---|---|---|---|---|---|---|---|---|---|---|---|---|
| Pipe size | DN | | | | | Air, inert gas (✶) | Water, oil, liquids (✶) | Steam (✶) | | | Flange type | |
| | | m³/h (gal/min) | (l/min) | Min. | Max. | | | | (mm) | | DIN EN 1092-1 | ANSI 150 ASME B16.5 |
| 2 1/2” | 65 | 65.4 (75.8) | 1090 | 4.5 (70) | 10 (150) | 2 (30) | 2 (30) | 2 (30) | 90 | 04 | T290D08BDSA0000 | T290D08CPSA0000 |
| | | 70.3 (81.5) | 1171 | 4 (60) | 10 (150) | 6 (90) | 6 (90) | 6 (90) | 125 | 05 | T290D08HDSA0000 | T290D08JPSA0000 |
| **NO - Normally open, entry under the disc** | | | | | | | | | | | | |
| 1/2” | 15 | 4.4 (5.1) | 73 | I (*) | 10 (150) | 16 (240) | 16 (240) | 10 (150) | 50 | 02 | T290D123DSA0000 | T290D124PSA0000 |
| | | 4.4 (5.1) | 73 | II (*) | | 16 (240) | 16 (240) | 10 (150) | 63 | 03 | T290D125DSA0000 | T290D126PSA0000 |
| 3/4” | 20 | 7.2 (8.3) | 120 | I (*) | 10 (150) | 16 (240) | 16 (240) | 10 (150) | 50 | 02 | T290D133DSA0000 | T290D134PSA0000 |
| | | 7.2 (8.3) | 120 | II (*) | | 16 (240) | 16 (240) | 10 (150) | 63 | 03 | T290D135DSA0000 | T290D136PSA0000 |
| 1” | 25 | 11.2 (12.9) | 186 | I (*) | 10 (150) | 16 (240) | 16 (240) | 10 (150) | 50 | 02 | T290D143DSA0000 | T290D144PSA0000 |
| | | 12.1 (14) | 201 | II (*) | | 16 (240) | 16 (240) | 10 (150) | 63 | 03 | T290D145DSA0000 | T290D146PSA0000 |
| | | 12.9 (14.9) | 215 | III (*) | | 16 (240) | 16 (240) | 10 (150) | 90 | 04 | T290D14BDSA0000 | T290D14CPSA0000 |
| 1 1/4” | 32 | 19 (22) | 316 | II (*) | 10 (150) | 16 (240) | 16 (240) | 10 (150) | 63 | 03 | T290D155DSA0000 | T290D156PSA0000 |
| | | 19.4 (22.5) | 323 | III (*) | | 16 (240) | 16 (240) | 10 (150) | 90 | 04 | T290D15BDSA0000 | T290D15CPSA0000 |
| | | 19.4 (22.5) | 323 | IV (*) | | 16 (240) | 16 (240) | 10 (150) | 125 | 05 | T290D15HDSA0000 | T290D15JPSA0000 |
| 1 1/2” | 40 | 27.3 (31.6) | 455 | II (*) | 10 (150) | 11 (165) | 11 (165) | 10 (150) | 63 | 03 | T290D165DSA0000 | T290D166PSA0000 |
| | | 27.4 (31.7) | 456 | III (*) | | 16 (240) | 16 (240) | 10 (150) | 90 | 04 | T290D16BDSA0000 | T290D16CPSA0000 |
| | | 27.6 (32) | 460 | IV (*) | | 16 (240) | 16 (240) | 10 (150) | 125 | 05 | T290D16HDSA0000 | T290D16JPSA0000 |
| 2” | 50 | 39.7 (46) | 661 | II (*) | 10 (150) | 7 (105) | 7 (105) | 7 (105) | 63 | 03 | T290D175DSA0000 | T290D176PSA0000 |
| | | 40.8 (47.3) | 680 | III (*) | | 13 (200) | 13 (200) | 10 (150) | 90 | 04 | T290D17BDSA0000 | T290D17CPSA0000 |
| | | 40.9 (47.4) | 681 | IV (*) | | 16 (240) | 16 (240) | 10 (150) | 125 | 05 | T290D17HDSA0000 | T290D17JPSA0000 |
| 2 1/2” | 65 | 65.4 (75.8) | 1090 | III (*) | 10 (150) | 7 (105) | 7 (105) | 7 (105) | 90 | 04 | T290D18BDSA0000 | T290D18CPSA0000 |
| | | 70.3 (81.5) | 1171 | IV (*) | | 16 (240) | 16 (240) | 10 (150) | 125 | 05 | T290D18HDSA0000 | T290D18JPSA0000 |

(✶) Ensure that compatibility of materials in contact with fluids is verified.
(*) Minimum pilot pressure varies with differential pressure, see page: **13**
(1) For dimensions, see drawing(s) for each construction type on the following page(s).

01533GB-2021/R01
Availability, design and specifications are subject to change without notice. All rights reserved.

## Specifications (straight seat valves)

| Piping (ISO 6708) | | Flow coefficient Kv (Cv) | | Pilot pressure bar (psi) | | Operating pressure differential bar (psi) | | | Actuator diameter | Dimensions / Type (1) | Catalog number | |
|---|---|---|---|---|---|---|---|---|---|---|---|---|
| Pipe size | DN | | | | | Air, inert gas (✶) | Water, oil, liquids (✶) | Steam (✶) | | | Flange type | |
| | | m³/h (gal/min) | (l/min) | Min. | Max. | | | | (mm) | | DIN EN 1092-1 | ANSI 150 ASME B16.5 |
| **NC - Normally closed, entry above the disc (version recommended for rapid-cycling steam applications)** | | | | | | | | | | | | |
| 1/2" | 15 | 3.8 (4.4) | 63 | V (∗) | 10 (150) | 10 (150) | - | 10 (150) | 50 | 01 | T290D323DSA0000 | T290D324PSA0000 |
| | | | | VI (∗) | | 10 (150) | - | 10 (150) | 63 | 02 | T290D325DSA0000 | T290D326PSA0000 |
| 3/4" | 20 | 7.4 (8.5) | 123 | V (∗) | 10 (150) | 10 (150) | - | 10 (150) | 50 | 01 | T290D333DSA0000 | T290D334PSA0000 |
| | | | | VI (∗) | | 10 (150) | - | 10 (150) | 63 | 02 | T290D335DSA0000 | T290D336PSA0000 |
| 1" | 25 | 11.3 (13.1) | 188 | V (∗) | 10 (150) | 10 (150) | - | 10 (150) | 50 | 01 | T290D343DSA0000 | T290D344PSA0000 |
| | | 13.1 (15.1) | 218 | VI (∗) | | 10 (150) | - | 10 (150) | 63 | 02 | T290D345DSA0000 | T290D346PSA0000 |
| 1 1/4" | 32 | 19.7 (22.8) | 328 | VI (∗) | 10 (150) | 10 (150) | - | 10 (150) | 63 | 02 | T290D355DSA0000 | T290D356PSA0000 |
| | | 20.9 (24.2) | 348 | VII (∗) | | 10 (150) | - | 10 (150) | 90 | 03 | T290D35BDSA0000 | T290D35CPSA0000 |
| 1 1/2" | 40 | 26.8 (31) | 446 | VI (∗) | 10 (150) | 10 (150) | - | 10 (150) | 63 | 02 | T290D365DSA0000 | T290D366PSA0000 |
| | | 28.6 (33.1) | 476 | VII (∗) | | 10 (150) | - | 10 (150) | 90 | 03 | T290D36BDSA0000 | T290D36CPSA0000 |
| 2" | 50 | 40.3 (46.7) | 671 | VI (∗) | 10 (150) | 9 (135) | - | 9 (135) | 63 | 02 | T290D375DSA0000 | T290D376PSA0000 |
| | | 41.8 (48.4) | 696 | VII (∗) | | 10 (150) | - | 10 (150) | 90 | 03 | T290D37BDSA0000 | T290D37CPSA0000 |
| 2 1/2" | 65 | 66.8 (77.4) | 1113 | VII (∗) | 10 (150) | 10 (150) | - | 10 (150) | 90 | 03 | T290D38BDSA0000 | T290D38CPSA0000 |

(✶) Ensure that compatibility of materials in contact with fluids is verified.
(∗) Minimum pilot pressure varies with differential pressure, see page: **13**
(1) For dimensions, see drawing(s) for each construction type on the following page(s).

01533GB-2021/R01
Availability, design and specifications are subject to change without notice. All rights reserved.

# ASCO™ Pneumatic Angle and Straight Seat Valves

## Product selection guide

Configurator - CAD Files

**PRODUCT CODE**

| E | 290 | D | 0 | 3 | 1 | 0 | S | A00 | 00 |
|---|---|---|---|---|---|---|---|---|---|

**Connection type**
- **E** = ISO 228/1 & ISO 7/1 (combination thread, G*)
- **8** = NPTF (ANSI B 1.20.3)
- **T** = Flange
- **J** = ISO 7/1 «Rc»

**Product series**
**290**

**Revision letter**
- **D** = Initial release

**Function**
- **0** = Normally Closed
- **1** = Normally Open
- **7** = Normally Closed - Low pilot pressure
- **3** = Normally Closed - Above the disc
- **4** = Double Acting (bistable)
- **P** = Normally closed with profil disc

**Nominal diameter**
- **1** = DN10 - 3/8”
- **2** = DN15 - 1/2”
- **3** = DN20 - 3/4”
- **4** = DN25 - 1”
- **5** = DN32 - 1 1/4”
- **6** = DN40 - 1 1/2”
- **7** = DN50 - 2”
- **8** = DN65 - 2 1/2”

**Actuator diameter - Piloting connections**
- **1** = 32 mm plastic - G 1/8”
- **2** = 32 mm plastic - NPT 1/8”
- **3** = 50 mm plastic - G 1/8”
- **4** = 50 mm plastic - NPTF 1/8”
- **5** = 63 mm plastic - G 1/8”
- **6** = 63 mm plastic - NPTF 1/8”
- **B** = 90 mm plastic - G 1/4”
- **C** = 90 mm plastic - NPTF 1/4”
- **H** = 125 mm plastic - G 1/4”
- **J** = 125 mm plastic - NPTF 1/4”
- **9** = 63 mm plastic - NAMUR plate (3)
- **A** = 90 mm plastic - NAMUR plate (3)
- **F** = 125 mm plastic - NAMUR plate (3)

(3) Solenoid pilot valves, series 551, 3/2 NC:
- Aluminum body, catalog number **SCG551A001**
- AISI 316L stainless steel body, catalog number **SCG551A40**

**Options**
- **A00** = Without
- **PFB** = Prepared for signaling box mounting (1)
- **W0B** = Without body (1)
- **AT1** = ATEX/IECEx 1/21 zones (1)
- **AT0** = ATEX/IECEx 0/20 zones (1)
- **02S** = Oxygen service 15 bar / 60°C
- **125** = CUTR certification (EAC Ex 1/21 zones) for Product
- **STL** = Stroke limiter for opening (1)
- **TC6** = Test tightness class VI (1)
- **VAC** = Industrial vacuum $10^{-3}$ mbar (1)
- **M31** = Stainless steel valve body material certified 3.1
- **FB0** = EC 1935-2004 and FDA CFR 21 material
- **WSP** = PTFE wiper seal
- **WSF** = FPM piston seal
- **11B** = Manual safety device (1)
- **P16** = PS > 16 bar (240 psi)
- **V10** = Visual indicator (2)
- **SSF** = Stainless steel insert for plastic actuator

**Valve body material**
- **S** = Stainless steel body
- **Y** = All 316L

**Port type 1-2**
- **0** = Threaded port
- **D** = Flange DIN EN 1092-1 (ISO 7005) standard (2-way)
- **P** = Flange ANSI standard 150 (2-way)

(1) See “Choice of options and accessories”, pages **14** and **15**
(2) For 32 mm and 50 mm actuators (standard for 63 mm, 90 mm and 125 mm actuators)

01533GB-2021/R01
Availability, design and specifications are subject to change without notice. All rights reserved.

## Repair Kits and Service Parts

### Angle seat valve

| | Ø | DN | Spare parts kits no. 50-63-90-125 mm entry under the disc | |
|---|---|---|---|---|
| | | | Normally Closed | Normally Open + Double Acting (bistable) |
| 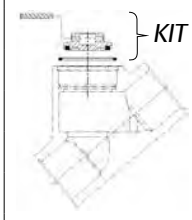  | 1/2” | 15 | M29054935100800 | M29054935103500 |
| | 3/4” | 20 | M29054935100900 | M29054935103600 |
| | 1” | 25 | M29054935101000 | M29054935103700 |
| | 1 1/4” | 32 | M29054935101100 | M29054935105200 |
| | 1 1/2” | 40 | M29054935101200 | M29054935105300 |
| | 2” | 50 | M29054935101300 | M29054935105400 |
| | 2 1/2” | 65 | M29054935101400 | M29054935105500 |

| | Ø | DN | Spare parts kits no. 50-63-90-125 mm entry above the disc |
|---|---|---|---|
| 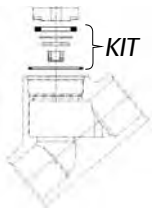  | 1/2” | 15 | M29054935100100 |
| | 3/4” | 20 | M29054935100200 |
| | 1” | 25 | M29054935100300 |
| | 1 1/4” | 32 | M29054935100400 |
| | 1 1/2” | 40 | M29054935100500 |
| | 2” | 50 | M29054935100600 |
| | 2 1/2” | 65 | M29054935100700 |

### Straight seat valve

| | Ø | DN | Spare parts kits no. 50-63-90-125 mm entry under the disc | |
|---|---|---|---|---|
| | | | Normally Closed | Normally Open |
| 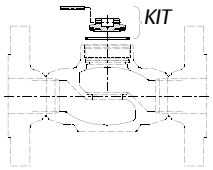  | 1/2” | 15 | M29054935100800 | M29054935103500 |
| | 3/4” | 20 | M29054935100900 | M29054935103600 |
| | 1” | 25 | M29054935101000 | M29054935103700 |
| | 1 1/4” | 32 | M29054935101100 | M29054935105200 |
| | 1 1/2” | 40 | M29054935101200 | M29054935105300 |
| | 2” | 50 | M29054935101300 | M29054935105400 |
| | 2 1/2” | 65 | M29054935101400 | M29054935105500 |

| | Ø | DN | Spare parts kits no. 50-63-90-125 mm entry above the disc |
|---|---|---|---|
| 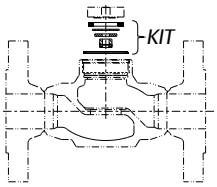  | 1/2” | 15 | M29054935100100 |
| | 3/4” | 20 | M29054935100200 |
| | 1” | 25 | M29054935100300 |
| | 1 1/4” | 32 | M29054935100400 |
| | 1 1/2” | 40 | M29054935100500 |
| | 2” | 50 | M29054935100600 |
| | 2 1/2” | 65 | M29054935100700 |

01533GB-2021/R01
Availability, design and specifications are subject to change without notice. All rights reserved.

# ASCO™ Pneumatic Angle and Straight Seat Valves

## Angle seat valve - View showing the function / actuator / flow direction

| 32 mm actuator | 50 mm actuator | 63 mm actuator | 90 mm actuator | 125 mm actuator |
|---|---|---|---|---|
| **NC - Normally closed, entry under the disc** | | | | |
| 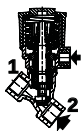 | 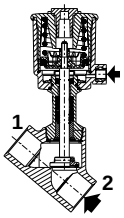 | 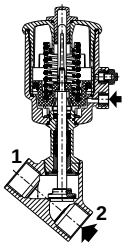 | 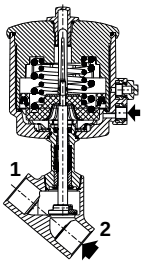 | 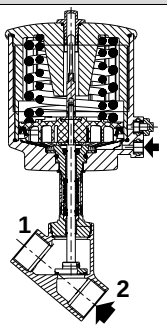 |
| **NO - Normally open, entry under the disc** | | | | |
| 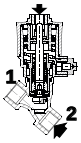 | 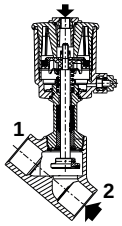 | 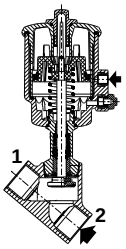 | 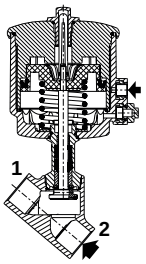 | 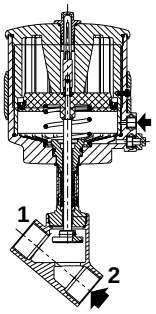 |
| **NC - Normally closed, entry above the disc** | | | | |
| 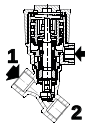 | 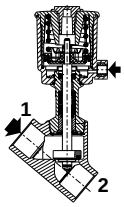 | 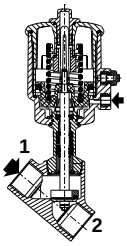 | 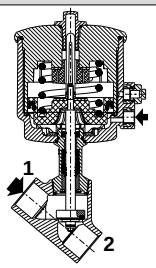 | - |
| **Bistable function** | | | | |
| 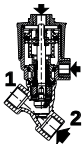 | 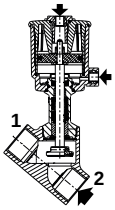 | 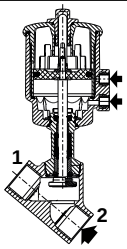 | - | - |

01533GB-2021/R01
Availability, design and specifications are subject to change without notice. All rights reserved.

## Straight seat valve - View showing the function / actuator / flow direction

| 50 mm actuator | 63 mm actuator | 90 mm actuator | 125 mm actuator |
|---|---|---|---|
| **NC - Normally closed, entry under the disc** | | | |
| 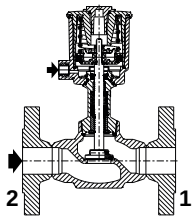 | 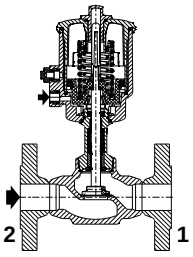 | 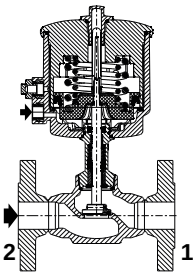 | 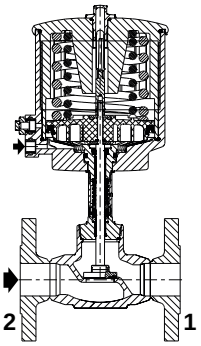 |
| **NO - Normally open, entry under the disc** | | | |
| 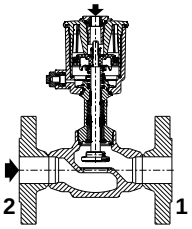 | 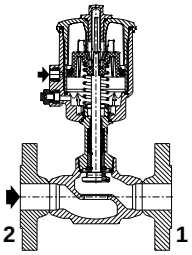 | 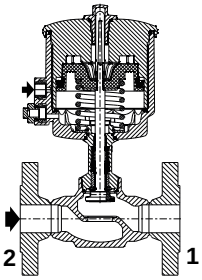 | 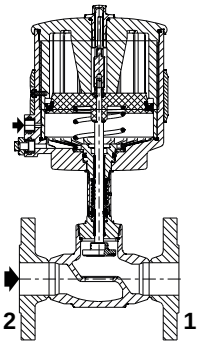 |
| **NC - Normally closed, entry above the disc** | | | |
| 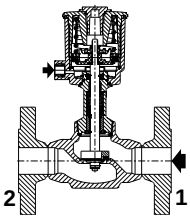 | 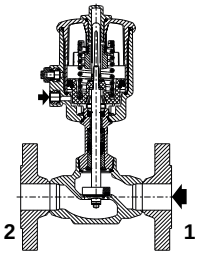 | 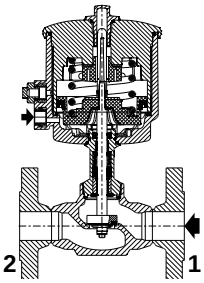 | - |

01533GB-2021/R01
Availability, design and specifications are subject to change without notice. All rights reserved.

# ASCO™ Pneumatic Angle and Straight Seat Valves

## Selection of the minimum pilot pressure

### NO - Normally open, entry under the disc

Min. pilot pressure

**32 mm actuator**

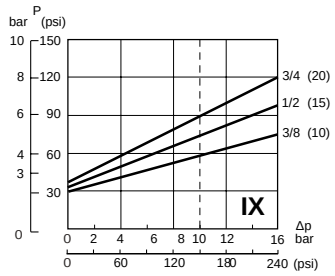


**50 mm actuator**

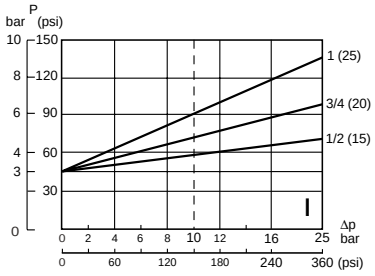


**63 mm actuator**

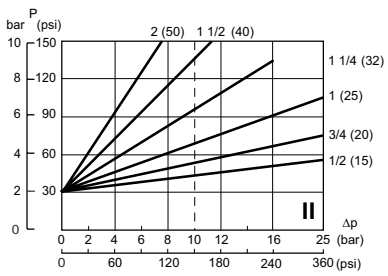


Min. pilot pressure

**90 mm actuator**

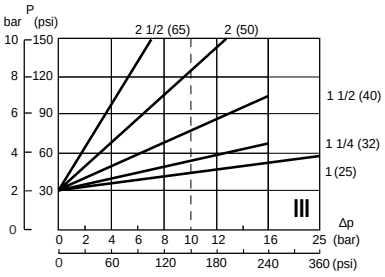


**125 mm operator**

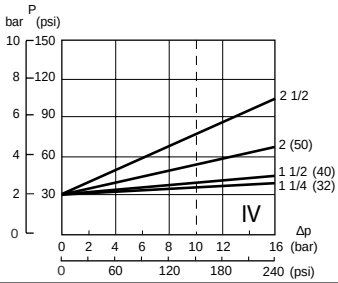


### NC - Normally closed, entry above the disc

Min. pilot pressure

**32 mm actuator**

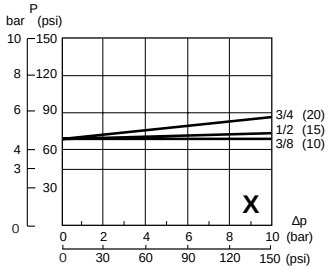


**50 mm actuator**

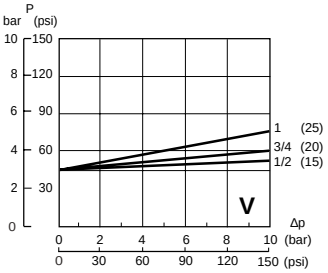


**63 mm actuator**

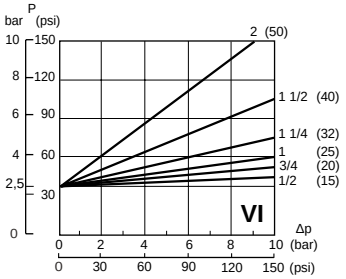


Min. pilot pressure

**90 mm actuator**

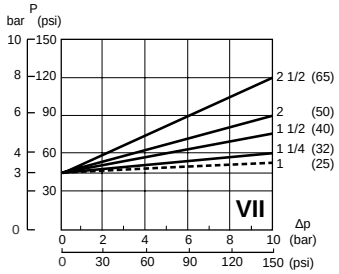


### Bistable function

Min. pilot pressure

**32 mm actuator**

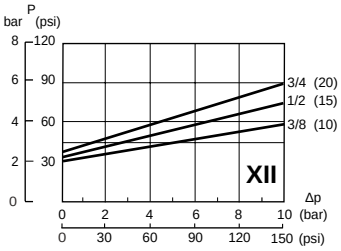


**50 mm actuator**

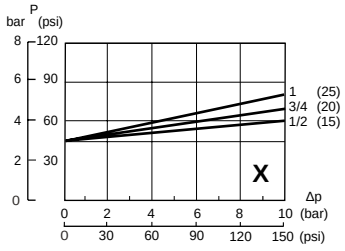


**63 mm actuator**

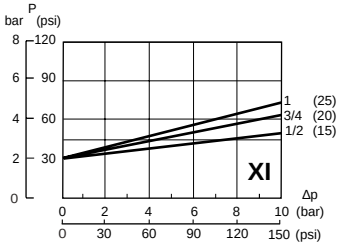


01533GB-2022/R01
Availability, design and specifications are subject to change without notice. All rights reserved.

## Installation

- Valves can be mounted in any position without affecting operation
- Possibility to interchange actuators (sizes/functions) on the same body
- Adjustable actuator enables 360° access to pilot port
- Compatible with ASTM 1, 2 and 3 oils
- Pipe connections (G*) have standard combination thread according to ISO 228/1 and ISO 7/1
- Thread connection (NPTF) has a standard thread according to ANSI B 1.20.3
- Thread connection (Rc) has a standard thread according to ISO 7/1
- Pilot thread connection (G) or (NPTF) have standard thread according to ISO 228/1 or ANSI B 1.20.3
- Installation/maintenance instructions in multiple languages are available on our website

## Choice of options and accessories

| Options | NC<br>Fluid entry under the disc | NO<br>Fluid entry under the disc | NC<br>Fluid entry above the disc | -<br>Bistable function | Actuator diameter compatibility (mm) | | | | |
|---|---|---|---|---|---|---|---|---|---|
| | | | | | 32 | 50 | 63 | 90 | 125 |
| AT0 | ● | ● | ● | ● | ● | ● | ● | ● | ● |
| AT1 | ● | ● | ● | ● | ● | ● | ● | ● | ● |

*When a combination of several options are selected (using the product configurator on our website) you will be provided with a specific combination code*

**ATEX/IECEx**

- 2/2 valves NC/NO designed for use in potentially explosive atmospheres in accordance with ATEX-Directive 2014/34/EU
  EC type examination certificate no.: **LCIE 20 ATEX 3037 X**
  IECEx Certificate of Conformity no.: **IECEx LCIE 20.0025X**
- Compliance with the Essential Health and Safety Requirements of the ATEX Directive has been assured by compliance with European Standards EN ISO 80079-36 and EN ISO 80079-37
- Recommended for applications in the chemical, oil, gas and paint coating industries etc.

ATEX-Directive 2014/34/EU, category 1

| Classification (zones) Category 1 | | | | | | |
|---|---|---|---|---|---|---|
| Dusts | | | Gas | | | Safety code |
| IIIA | IIIB | IIIC | IIA | IIB | IIC | |
| Zone 20 | | | Zone 0 | | | Ⓔx II 1G Ex h IIC T* Ga<br>Ⓔx II 1D Ex h IIIC T*°C Da |

| 1GD | | Plastic actuator | |
|---|---|---|---|
| T*°C | T* | Ts amb | T fluid |
| 300°C | T2 | - | - |
| 200°C | T3 | 60°C | 145°C |
| 135°C | T4 | 60°C | 93°C |
| 100°C | T5 | 60°C | 65°C |
| 85°C | T6 | 60°C | 53°C |

ATEX-Directive 2014/34/EU, category 2

| Classification (zones) Category 2 | | | | | | |
|---|---|---|---|---|---|---|
| Dusts | | | Gas | | | Safety code |
| IIIA | IIIB | IIIC | IIA | IIB | IIC | |
| Zone 21 | | | Zone 1 | | | Ⓔx II 2G Ex h IIC T* Gb X<br>Ⓔx II 2D Ex h IIIC T*°C Db X |

| 2GD | | Plastic actuator | |
|---|---|---|---|
| T*°C | T* | Ts amb | T fluid |
| 300°C | T2 | - | - |
| 200°C | T3 | 60°C | 180°C |
| 135°C | T4 | 60°C | 115°C |
| 100°C | T5 | 60°C | 80°C |
| 85°C | T6 | 60°C | 60°C |

T*°C = Surface temperature
T* = Temperature class
Ts amb = Ambient temperature
T fluid = Fluid temperature

01533GB-2021/R01
Availability, design and specifications are subject to change without notice. All rights reserved.

# ASCO™ Pneumatic Angle and Straight Seat Valves

## Choice of options and accessories

| Options | NC<br>Fluid entry under the disc | NO<br>Fluid entry under the disc | NC<br>Fluid entry above the disc | -<br>Bistable function | Actuator diameter compatibility (mm)<br>32 | 50 | 63 | 90 | 125 | *When a combination of several options are selected (using the product configurator on our website) you will be provided with a specific combination code* |
|---|---|---|---|---|---|---|---|---|---|---|
| **PFB** | ● | ● | ● | – | ● | ● | ● | ● | ● | 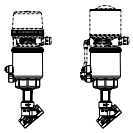 Prepared for signaling box mounting |
| – | ● | ● | ● | – | – | ● | ● | ● | ● |  **See the dedicated catalogue pages**<br>• The signaling box can be installed on compatible actuators and indicates whether the valve is open or closed |
| – | ● | ● | ● | – | ● | ● | ● | ● | ● |  **See the dedicated catalogue pages**<br>• Signaling unit with reed switch or magneto-resistive (MR) detectors for compatible actuators |
| **W0B** | ● | ● | ● | ● | ● | ● | ● | ● | ● |  Without Body |
| **02S** | ● | ● | ● | ● | ● | ● | ● | ● | ● |   **Oxygen service**<br>• Special grease and cleaning<br>• Pressure limited to 15 bar/temperature limited to +60°C |
| **see page 9** | ● | ● | ● | ● | – | – | ● | ● | ● | 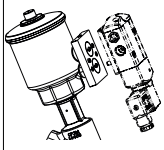 **Adapter plate for NAMUR pad-mount pilot**<br>• Adaptable sur actionneurs 63 mm, 90 mm et 125 mm<br>• Stainless steel AISI 316L<br>• Solenoid pilot valves, series 551, 3/2 NC:<br>- Aluminum body, catalog number **SCG551A001**<br>- AISI 316L stainless steel body, catalog number **SCG551A409** |
| **STL** | ● | – | ● | – | – | ● | ● | ● | ● |  Stroke limiter for opening |
| **TC6** | ● | ● | ● | ● | ● | ● | ● | ● | ● | Test tightness class VI (FCI 70-2) |
| **VAC** | ● | ● | - | - | ● | ● | ● | ● | ● |  Industrial vacuum $10^{-3}$ mbar (FPM disc) |
| **M31** | ● | ● | ● | ● | ● | ● | ● | ● | ● | Valve body material composition certificate 3.1 |
| **FB0** | ● | ● | ● | ● | ● | ● | ● | ● | ● |   EC 1935-2004 and FDA CFR 21 material |
| **WSP** | ● | ● | ● | – | ● | ● | ● | ● | ● | PTFE wiper seal (for filtered / cleaned medium) |
| **WSF** | ● | ● | ● | – | ● | ● | ● | ● | – | FPM piston seal |
| **11B** | ● | – | ● | – | – | ● | ● | ● | ● |  Manual safety device<br>• Allows opening of a de-energized valve<br>• For normally closed (NC) valves only (under/above the disc) |
| **P16** | ● | – | – | – | – | ● | ● | ● | – | PS > 16 bar (240 psi) |
| **V10** | ● | ● | ● | – | ● | ● (NC) | (1) | (1) | (1) |  Visual position indicator (1)<br>• Visual indication of open or closed position for NC valves with 32 mm or 50 mm actuator<br>• Applicable for NO and double acting valves with 32 mm actuator<br>(1) Standard indicator for 63 mm, 90 mm and 125 mm actuators |

• Available feature - Not available

## Choice of pilots

(For information about pilots, please consult the dedicated catalog pages)

01533GB-2021/R01
Availability, design and specifications are subject to change without notice. All rights reserved.

## **Dimensions** mm (inches), **Weight** kg (Lbs)

Configurator - CAD Files



**TYPE 01**
**32 mm actuator / Angle seat valve / Stainless steel body**
Fluid entry:
under the disc at 2
above the disc at 1

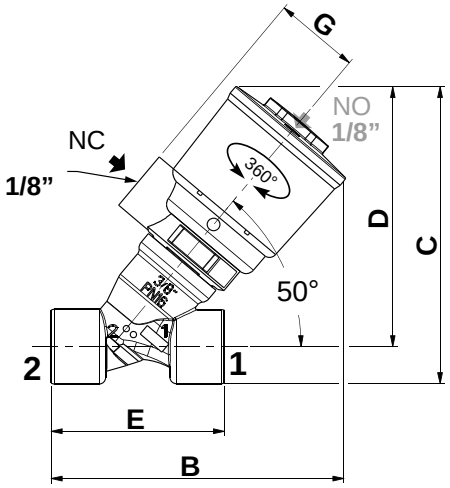


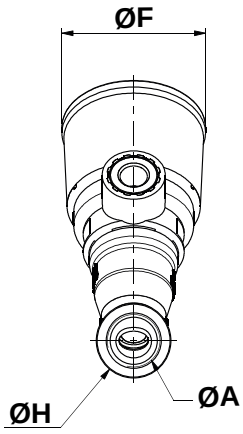


**NC**
entry
under the disc at 2

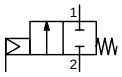

**NC**
entry
above the disc at 1

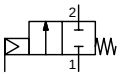

**NO**
entry
under the disc at 2

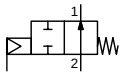

Visual indicator (**V10**)

**NC**

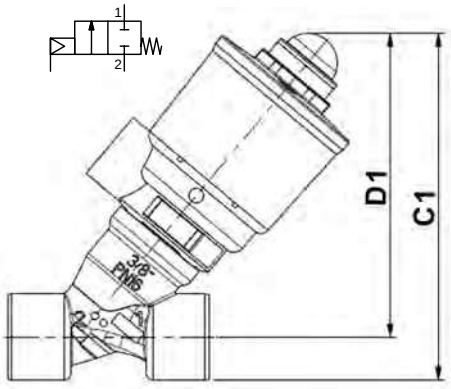


**NO**

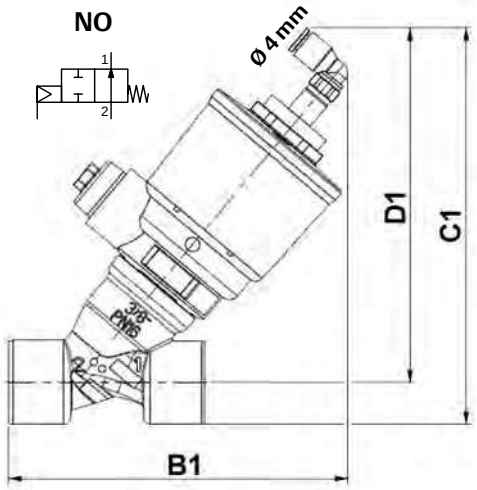


| Type | Actuator diameter | ØA | | B | B1 NO (V10) | C | C1 NC (V10) | C1 NO (V10) | D | D1 NC (V10) | D1 NO (V10) | E | ØF | G | ØH | Weight (1) | |
|---|---|---|---|---|---|---|---|---|---|---|---|---|---|---|---|---|---|
| 01 | 32 mm | G* 3/8” | mm | 94 | 95 | 94 | 95 | 111.5 | 83 | 83.5 | 100 | 55 | 46 | 27 | 24 | 0.3 | kg |
| | | NPT 3/8” | (in) | 3.701 | 3.740 | 3.701 | 3.740 | 4.390 | 3.268 | 3.287 | 3.937 | 2.165 | 1.811 | 1.063 | 0.945 | 0.7 | (Lbs) |
| | | G* 1/2” | mm | 100 | 102 | 98 | 99 | 115.5 | 85 | 85.5 | 102 | 65 | 46 | 27 | 28 | 0.4 | kg |
| | | NPT 1/2” | (in) | 3.937 | 4.016 | 3.858 | 3.898 | 4.547 | 3.346 | 3.366 | 4.016 | 2.559 | 1.811 | 1.063 | 1.102 | 0.8 | (Lbs) |
| | | G* 3/4” | mm | 108 | 110 | 106 | 106.5 | 123 | 90 | 90.5 | 107 | 75 | 46 | 27 | 32 | 0.5 | kg |
| | | NPT 3/4” | (in) | 4.252 | 4.331 | 4.173 | 4.193 | 4.843 | 3.543 | 3.563 | 4.213 | 2.953 | 1.811 | 1.063 | 1.260 | 1.0 | (Lbs) |

(1) Weight of valve without pilot.
For solenoid pilot valve. see dedicated catalog pages.

01533GB-2021/R01
Availability, design and specifications are subject to change without notice. All rights reserved.

# ASCO™ Pneumatic Angle and Straight Seat Valves

## **Dimensions** mm (inches), **Weight** kg (Lbs)

Configurator - CAD Files



**TYPE 02**
**50 mm actuator / Angle seat valve / Stainless steel body**
Fluid entry:
under the disc at 2
above the disc at 1

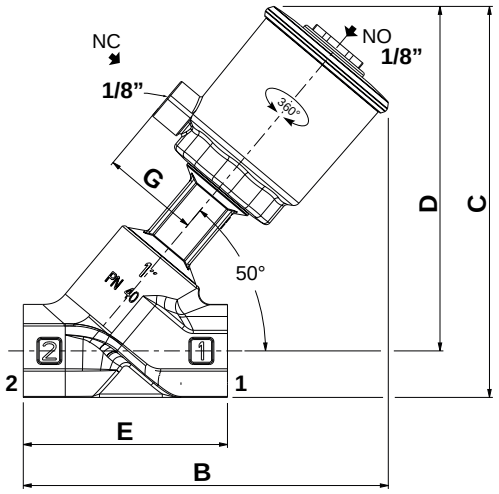


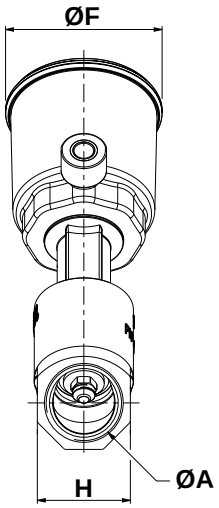


**NC**
entry
under the disc at 2

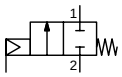

**NC**
entry
above the disc at 1

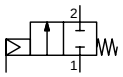

**NO**
entry
under the disc at 2

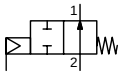

**Bistable**
entry under the
disc at 2

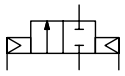

2 x 1/8”
orifices for piloting

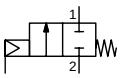

Visual indicator (**V10**)
(NC only)

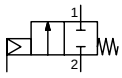

Manual safety device (**11B**)
(NC only)

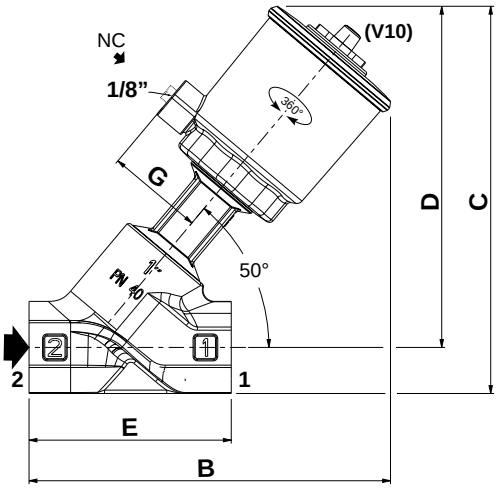


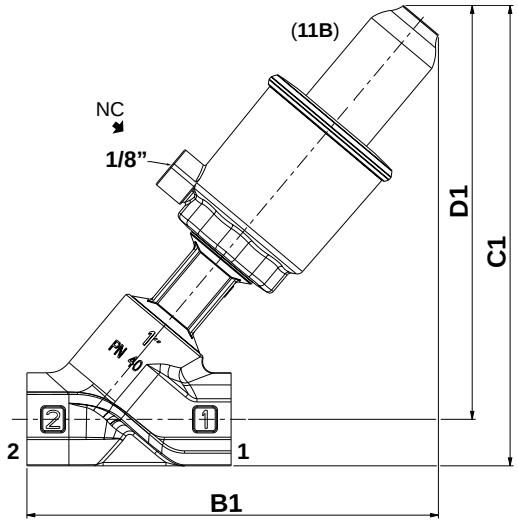


| Type | Actuator diameter | ØA | | B | B1 | C | C1 | D | D1 | E | ØF | G | H | Weight (1) | |
|---|---|---|---|---|---|---|---|---|---|---|---|---|---|---|---|
| 02 | 50 mm | G* 1/2” | mm | 147.5 | 168 | 156.5 | 187 | 143 | 173.5 | 65 | 69 | 43 | 27 | 0.8 | kg |
| | | NPTF 1/2” | (in) | 5.807 | 6.614 | 6.161 | 7.362 | 5.630 | 6.831 | 2.559 | 2.717 | 1.693 | 1.063 | 1.8 | (Lbs) |
| | | G* 3/4” | mm | 151.5 | 172 | 160 | 191 | 144 | 174.5 | 75 | 69 | 43 | 32 | 0.9 | kg |
| | | NPTF 3/4” | (in) | 5.965 | 6.772 | 6.299 | 7.520 | 5.669 | 6.870 | 2.953 | 2.717 | 1.693 | 1.260 | 2.0 | (Lbs) |
| | | G* 1” | mm | 161 | 181.5 | 172.5 | 203 | 152 | 182.5 | 90 | 69 | 43 | 41 | 1.2 | kg |
| | | NPTF 1” | (in) | 6.339 | 7.146 | 6.791 | 7.992 | 5.984 | 7.185 | 3.543 | 2.717 | 1.693 | 1.614 | 2.6 | (Lbs) |

(1) Weight of valve without pilot.
For solenoid pilot valve. see dedicated catalog pages.

01533GB-2021/R01
Availability, design and specifications are subject to change without notice. All rights reserved.

## **Dimensions** mm (inches), **Weight** kg (Lbs)

Configurator - CAD Files



**TYPE 02**
**50 mm actuator / Straight seat valve / Stainless steel body**
Fluid entry:
under the disc at 2
above the disc at 1

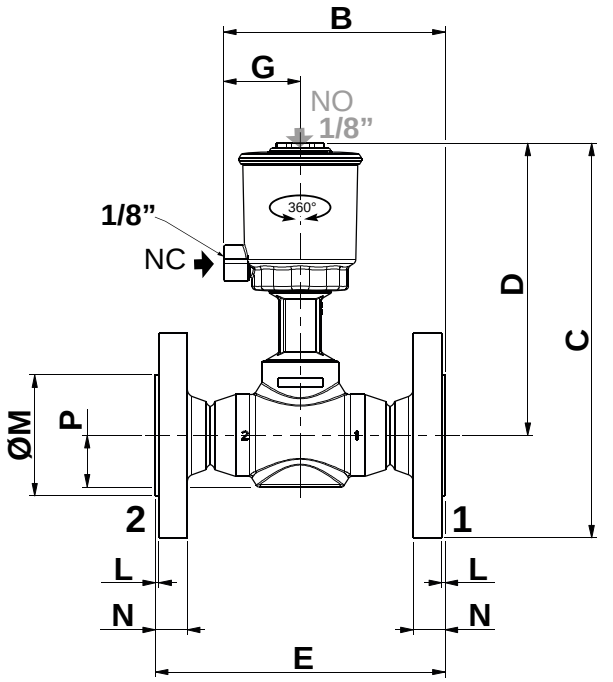


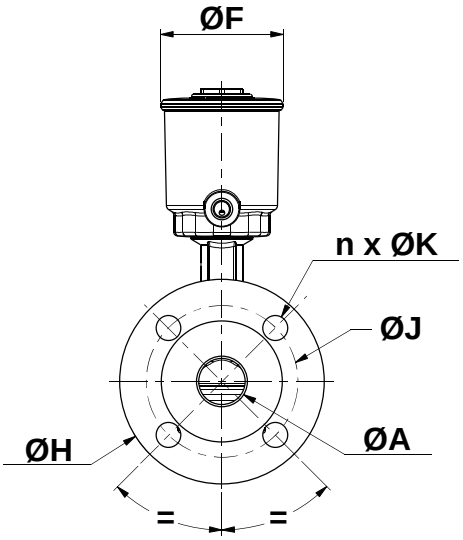


**NC**
entry
under the disc at 2

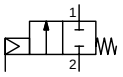

**NO**
entry
under the disc at 2

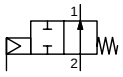

**NC**
entry
above the disc at 1

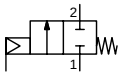

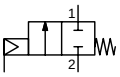

Visual Indicator (**V10**)
(NC only)

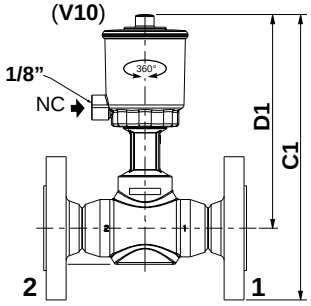


| DN | | C1 | | D1 |
|---|---|---|---|---|
| | | ISO | ANSI | |
| 15 | mm | 214 | 211.5 | 166.5 |
| | (in) | 8.425 | 8.327 | 6.555 |
| 20 | mm | 218.5 | 216 | 166 |
| | (in) | 8.602 | 8.504 | 6.535 |
| 25 | mm | 231.5 | 229 | 174 |
| | (in) | 9.114 | 9.016 | 6.850 |

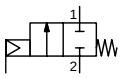

Manual safety device (**11B**)
(NC only)

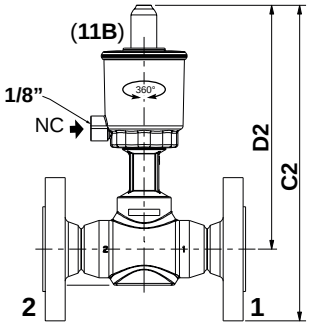


| DN | | C2 | | D2 |
|---|---|---|---|---|
| | | ISO | ANSI | |
| 15 | mm | 257.5 | 255 | 210 |
| | (in) | 10.138 | 10.039 | 8.268 |
| 20 | mm | 262 | 259.5 | 209.5 |
| | (in) | 10.315 | 10.217 | 8.248 |
| 25 | mm | 275 | 272.5 | 218 |
| | (in) | 10.827 | 10.728 | 8.563 |

| Type | Actuator diameter | DN | | ØA | B | C | | D | E | ØF | G | ØH | | ØJ | |
|---|---|---|---|---|---|---|---|---|---|---|---|---|---|---|---|
| | | | | | | ISO | ANSI | | | | | ISO | ANSI | ISO | ANSI |
| 02 | 50 mm | 15 | mm | 17.3 | 108 | 204.5 | 202 | 157 | 130 | 69 | 43 | 95 | 90 | 65 | 60.3 |
| | | | (in) | 0.681 | 4.252 | 8.051 | 7.953 | 6.181 | 5.118 | 2.717 | 1.693 | 3.740 | 3.543 | 2.559 | 2.374 |
| | | 20 | mm | 22.3 | 118 | 208.5 | 206 | 156 | 150 | 69 | 43 | 105 | 100 | 75 | 69.9 |
| | | | (in) | 0.878 | 4.646 | 8.209 | 8.110 | 6.142 | 5.906 | 2.717 | 1.693 | 4.134 | 3.937 | 2.953 | 2.752 |
| | | 25 | mm | 28.5 | 123 | 222 | 219.5 | 164.5 | 160 | 69 | 43 | 115 | 110 | 85 | 79.4 |
| | | | (in) | 1.122 | 4.843 | 8.740 | 8.642 | 6.476 | 6.299 | 2.717 | 1.693 | 4.528 | 4.331 | 3.346 | 3.126 |

| DN | | ØA | n x ØK | | L | | M | | N | | P | Weight (1) | | |
|---|---|---|---|---|---|---|---|---|---|---|---|---|---|---|
| | | | ISO | ANSI | ISO | ANSI | ISO | ANSI | ISO | ANSI | | ISO | ANSI | |
| 15 | mm | 17.3 | 4 X 14 | 4 X 16 | 2 | 1.5 | 45 | 34.9 | 16 | 13.2 | 19.75 | 2.5 | 2.1 | kg |
| | (in) | 0.681 | 4 X 0.551 | 4 X 0.63 | 0.079 | 0.059 | 1.772 | 1.374 | 0.630 | 0.520 | 0.778 | 5.4 | 4.5 | (Lbs) |
| 20 | mm | 22.3 | 4 X 14 | 4 X 16 | 2 | 1.5 | 58 | 42.9 | 18 | 13.2 | 23 | 3.3 | 2.6 | kg |
| | (in) | 0.878 | 4 X 0.551 | 4 X 0.63 | 0.079 | 0.059 | 2.283 | 1.689 | 0.709 | 0.520 | 0.906 | 7.3 | 5.7 | (Lbs) |
| 25 | mm | 28.5 | 4 X 14 | 4 X 16 | 2 | 1.5 | 68 | 50.8 | 18 | 14.2 | 29 | 4.0 | 3.3 | kg |
| | (in) | 1.122 | 4 X 0.551 | 4 X 0.63 | 0.079 | 0.059 | 2.677 | 2.000 | 0.709 | 0.559 | 1.142 | 8.9 | 7.4 | (Lbs) |

(1) Weight of valve without pilot.
For solenoid pilot valve. see dedicated catalog pages.

01533GB-2021/R01
Availability, design and specifications are subject to change without notice. All rights reserved.

# ASCO™ Pneumatic Angle and Straight Seat Valves

## **Dimensions** mm (inches), **Weight** kg (Lbs)

Configurator - CAD Files



**TYPE 03**
**63 mm actuator / Angle seat valve / Stainless steel body**
Fluid entry:
under the disc at 2
above the disc at 1

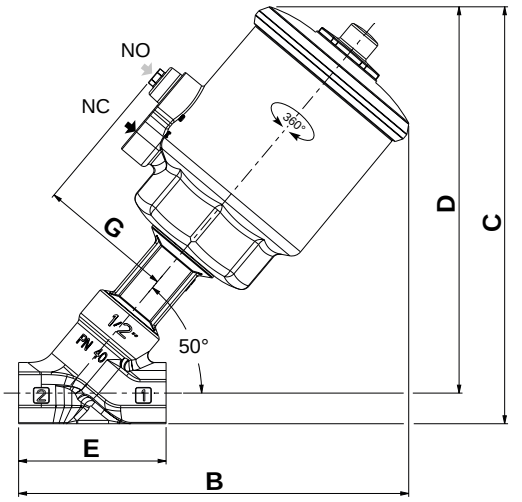


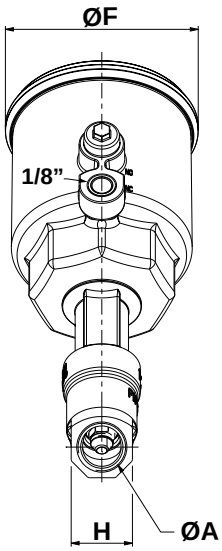


**NC**
entry
under the disc at 2

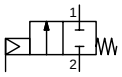

**NC**
entry
above the disc at 1

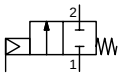

**NO**
entry
under the disc at 2

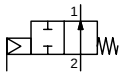

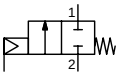

Manual safety device (**11B**)
(NC only)

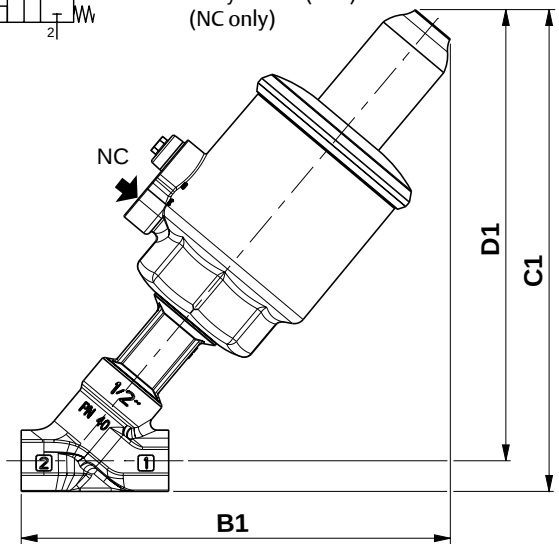


NAMUR plate
(NC / NO)

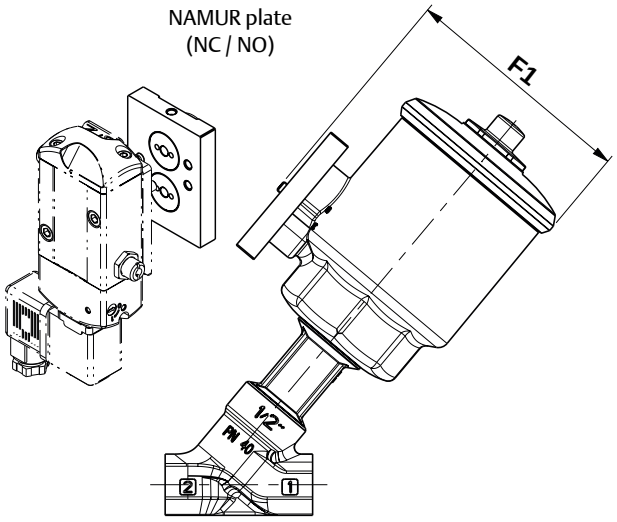


| Type | Actuator diameter | ØA | | B | B1 | C | C1 | D | D1 | E | ØF | F1 | G | H | Weight (1) | |
|---|---|---|---|---|---|---|---|---|---|---|---|---|---|---|---|---|
| 03 | 63 mm | G* 1/2" | mm | 172 | 189.5 | 184 | 212.5 | 170.5 | 199 | 65 | 85 | 104 | 59.5 | 27 | 1 | kg |
| | | NPTF 1/2" | (in) | 6.772 | 7.461 | 7.244 | 8.366 | 6.713 | 7.835 | 2.559 | 3.346 | 4.094 | 2.343 | 1.063 | 2.2 | (Lbs) |
| | | G* 3/4" | mm | 176 | 193.5 | 187 | 215.5 | 171 | 199.5 | 75 | 85 | 104 | 59.5 | 32 | 1.1 | kg |
| | | NPTF 3/4" | (in) | 6.929 | 7.618 | 7.362 | 8.484 | 6.732 | 7.854 | 2.953 | 3.346 | 4.094 | 2.343 | 1.260 | 2.4 | (Lbs) |
| | | G* 1" | mm | 185.5 | 203 | 199.5 | 228 | 179 | 207.5 | 90 | 85 | 104 | 59.5 | 41 | 1.5 | kg |
| | | NPTF 1" | (in) | 7.303 | 7.992 | 7.854 | 8.976 | 7.047 | 8.169 | 3.543 | 3.346 | 4.094 | 2.343 | 1.614 | 3.3 | (Lbs) |
| | | G* 1 1/4" | mm | 206 | 223.5 | 215.5 | 244 | 190.5 | 219 | 110 | 85 | 104 | 59.5 | 50 | 1.9 | kg |
| | | NPTF 1 1/4" | (in) | 8.110 | 8.799 | 8.484 | 9.606 | 7.500 | 8.622 | 4.331 | 3.346 | 4.094 | 2.343 | 1.969 | 4.2 | (Lbs) |
| | | G* 1 1/2" | mm | 206 | 223.5 | 222.5 | 251 | 192.5 | 221 | 120 | 85 | 104 | 59.5 | 60 | 2.5 | kg |
| | | NPTF 1 1/2" | (in) | 8.110 | 8.799 | 8.760 | 9.882 | 7.579 | 8.701 | 4.724 | 3.346 | 4.094 | 2.343 | 2.362 | 5.5 | (Lbs) |
| | | G* 2" | mm | 229 | 246.5 | 234.5 | 263 | 199.5 | 228 | 150 | 85 | 104 | 59.5 | 70 | 3.3 | kg |
| | | NPTF 2" | (in) | 9.016 | 9.705 | 9.232 | 10.354 | 7.854 | 8.976 | 5.906 | 3.346 | 4.094 | 2.343 | 2.756 | 7.3 | (Lbs) |

(1) Weight of valve without pilot.
For solenoid pilot valve. see dedicated catalog pages.

01533GB-2021/R01
Availability, design and specifications are subject to change without notice. All rights reserved.

01533GB-2021/R01
Availability, design and specifications are subject to change without notice. All rights reserved.

## **Dimensions** mm (inches), **Weight** kg (Lbs)

Configurator - CAD Files



**TYPE 03**
**63 mm actuator / Straight seat valve / Stainless steel body**
Fluid entry:
under the disc at 2
above the disc at 1

**NC**
entry
under the disc at 2

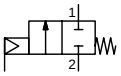

**NC**
entry
above the disc at 1

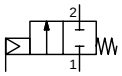

**NO**
entry
under the disc at 2

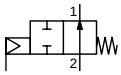

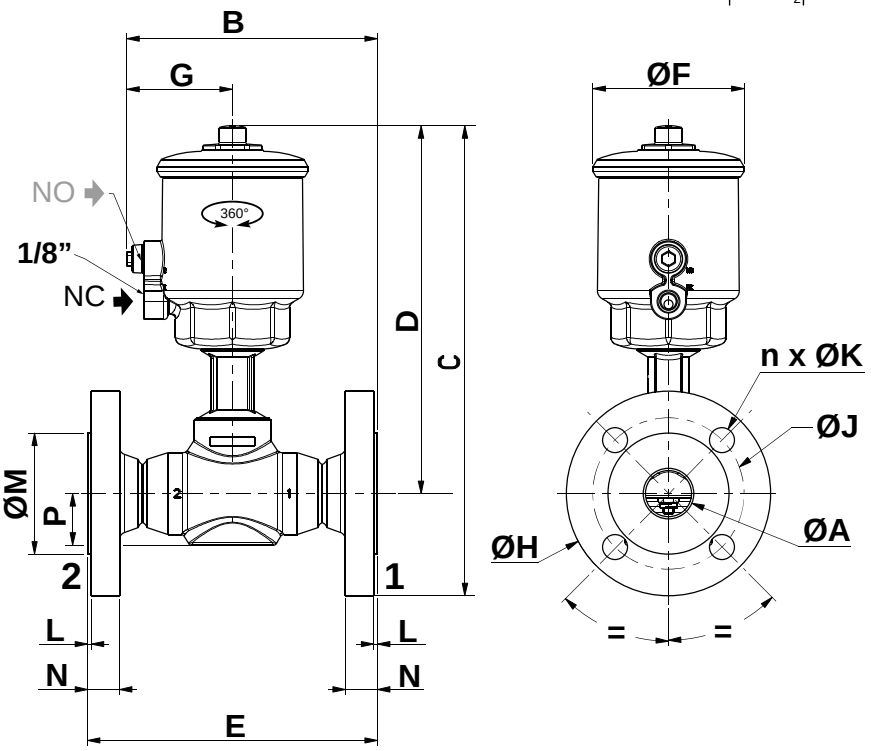


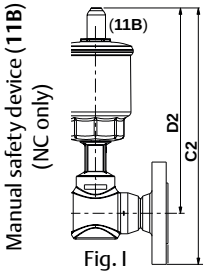


Fig. I




Fig. II

| DN | | C2 | | D2 | F1 |
|---|---|---|---|---|---|
| | | ISO | ANSI | | |
| 15 | mm | 290.5 | 288 | 243 | 126.5 |
| | (in) | 11.437 | 11.339 | 9.567 | 4.980 |
| 20 | mm | 295.0 | 292.5 | 242 | 136.5 |
| | (in) | 11.614 | 11.516 | 9.528 | 5.374 |
| 25 | mm | 308 | 305.5 | 250.5 | 141.5 |
| | (in) | 12.126 | 12.028 | 9.862 | 5.571 |
| 32 | mm | 337.5 | 325 | 267.5 | 151.5 |
| | (in) | 13.287 | 12.795 | 10.531 | 5.965 |
| 40 | mm | 339.5 | 327 | 264.5 | 161.5 |
| | (in) | 13.366 | 12.874 | 10.413 | 6.358 |
| 50 | mm | 358 | 350.5 | 275.5 | 176.5 |
| | (in) | 14.094 | 13.799 | 10.846 | 6.949 |

| Type | Actuator diameter | DN | | ØA | B | C | | D | E | ØF | G | ØH | | ØJ | |
|---|---|---|---|---|---|---|---|---|---|---|---|---|---|---|---|
| | | | | | | ISO | ANSI | | | | | ISO | ANSI | ISO | ANSI |
| 03 | 63 mm | 15 | mm | 17.3 | 124.5 | 247 | 244.5 | 199.5 | 130 | 85 | 59.5 | 95 | 90 | 65 | 60.3 |
| | | | (in) | 0.681 | 4.902 | 9.724 | 9.626 | 7.854 | 5.118 | 3.346 | 2.343 | 3.740 | 3.543 | 2.559 | 2.374 |
| | | 20 | mm | 22.3 | 134.5 | 251 | 248.5 | 198.5 | 150 | 85 | 59.5 | 105 | 100 | 75 | 69.9 |
| | | | (in) | 0.878 | 5.295 | 9.882 | 9.783 | 7.815 | 5.906 | 3.346 | 2.343 | 4.134 | 3.937 | 2.953 | 2.752 |
| | | 25 | mm | 28.5 | 139.5 | 264.5 | 262 | 207 | 160 | 85 | 59.5 | 115 | 110 | 85 | 79.4 |
| | | | (in) | 1.122 | 5.492 | 10.413 | 10.315 | 8.150 | 6.299 | 3.346 | 2.343 | 4.528 | 4.331 | 3.346 | 3.126 |
| | | 32 | mm | 37.2 | 149.5 | 293.5 | 281 | 223.5 | 180 | 85 | 59.5 | 140 | 115 | 100 | 88.9 |
| | | | (in) | 1.465 | 5.886 | 11.555 | 11.063 | 8.799 | 7.087 | 3.346 | 2.343 | 5.512 | 4.528 | 3.937 | 3.500 |
| | | 40 | mm | 43.1 | 159.5 | 296 | 283.5 | 221 | 200 | 85 | 59.5 | 150 | 125 | 110 | 98.4 |
| | | | (in) | 1.697 | 6.280 | 11.654 | 11.161 | 8.701 | 7.874 | 3.346 | 2.343 | 5.906 | 4.921 | 4.331 | 3.874 |
| | | 50 | mm | 54.5 | 174.5 | 314 | 306.5 | 231.5 | 230 | 85 | 59.5 | 165 | 150 | 125 | 120.7 |
| | | | (in) | 2.146 | 6.870 | 12.362 | 12.067 | 9.114 | 9.055 | 3.346 | 2.343 | 6.496 | 5.906 | 4.921 | 4.752 |

| DN | | ØA | n x ØK | | L | | M | | N | | P | Weight [1] | | |
|---|---|---|---|---|---|---|---|---|---|---|---|---|---|---|
| | | | ISO | ANSI | ISO | ANSI | ISO | ANSI | ISO | ANSI | | ISO | ANSI | |
| 15 | mm | 17.3 | 4 X 14 | 4 X 16 | 2 | 1.5 | 45 | 34.9 | 16 | 13.2 | 19.75 | 2.5 | 2.1 | kg |
| | (in) | 0.681 | 4 X 0.551 | 4 X 0.63 | 0.079 | 0.059 | 1.772 | 1.374 | 0.630 | 0.520 | 0.778 | 6.1 | 5.2 | (Lbs) |
| 20 | mm | 22.3 | 4 X 14 | 4 X 16 | 2 | 1.5 | 58 | 42.9 | 18 | 13.2 | 23 | 3.5 | 2.8 | kg |
| | (in) | 0.878 | 4 X 0.551 | 4 X 0.63 | 0.079 | 0.059 | 2.283 | 1.689 | 0.709 | 0.520 | 0.906 | 7.8 | 6.2 | (Lbs) |
| 25 | mm | 28.5 | 4 X 14 | 4 X 16 | 2 | 1.5 | 68 | 50.8 | 18 | 14.2 | 29 | 4.4 | 3.7 | kg |
| | (in) | 1.122 | 4 X 0.551 | 4 X 0.63 | 0.079 | 0.059 | 2.677 | 2.000 | 0.709 | 0.559 | 1.142 | 9.6 | 8.1 | (Lbs) |
| 32 | mm | 37.2 | 4 X 18 | 4 X 16 | 2 | 1.5 | 78 | 63.5 | 18 | 15.8 | 32.5 | 6.2 | 4.7 | kg |
| | (in) | 1.465 | 4 X 0.709 | 4 X 0.63 | 0.079 | 0.059 | 3.071 | 2.500 | 0.709 | 0.622 | 1.280 | 13.7 | 10.4 | (Lbs) |
| 40 | mm | 43.1 | 4 X 18 | 4 X 16 | 3 | 1.5 | 88 | 73 | 18 | 17.4 | 36.85 | 7.2 | 6.0 | kg |
| | (in) | 1.697 | 4 X 0.709 | 4 X 0.63 | 0.118 | 0.059 | 3.465 | 2.874 | 0.709 | 0.685 | 1.451 | 15.9 | 13.2 | (Lbs) |
| 50 | mm | 54.5 | 4 X 18 | 4 X 19.1 | 3 | 1.5 | 102 | 92.1 | 20 | 19 | 42.5 | 10.0 | 8.9 | kg |
| | mm | 2.146 | 4 X 0.709 | 4 X 0.752 | 0.118 | 0.059 | 4.016 | 3.626 | 0.787 | 0.748 | 1.673 | 21.9 | 19.6 | (Lbs) |

[1] Weight of valve without pilot.
For solenoid pilot valve. see dedicated catalog pages.

01533GB-2021/R01
Availability, design and specifications are subject to change without notice. All rights reserved.

# ASCO™ Pneumatic Angle and Straight Seat Valves

## **Dimensions** mm (inches), **Weight** kg (Lbs)

Configurator - CAD Files



**TYPE 04**
**90 mm actuator / Angle seat valve / Stainless steel body**
Fluid entry:
under the disc at 2
above the disc at 1

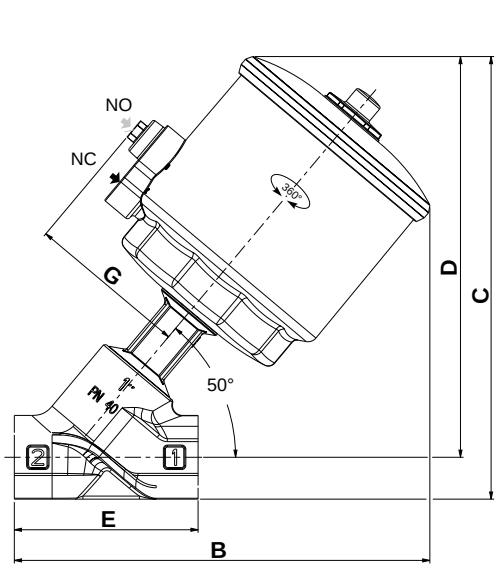


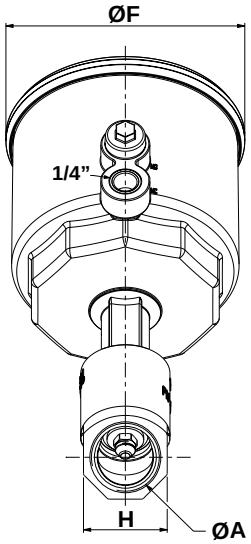


**NC**
entry under the disc at 2

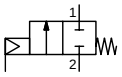


**NC**
entry above the disc at 1

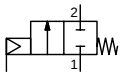


**NO**
entry under the disc at 2

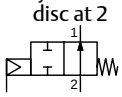


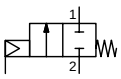


Manual safety device (**11B**)
(NC only)

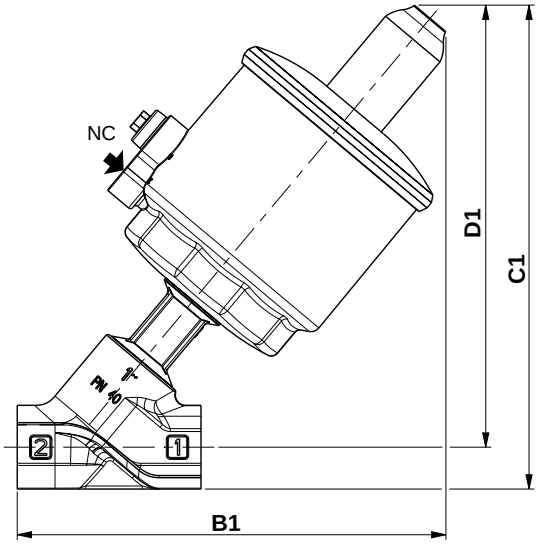


NAMUR plate
(NC / NO)

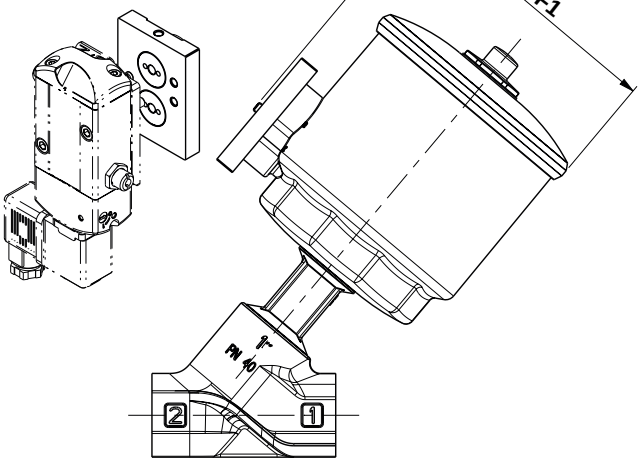


| Type | Actuator diameter | ØA | | B | B1 | C | C1 | D | D1 | E | ØF | F1 | G | H | Weight (1) | |
|---|---|---|---|---|---|---|---|---|---|---|---|---|---|---|---|---|
| 04 | 90 mm | G* 1" | mm | 203.5 | 210 | 217 | 237 | 196.5 | 216.5 | 90 | 117 | 137 | 78.5 | 41 | 2.1 | kg |
| | | NPTF 1" | (in) | 8.012 | 8.268 | 8.543 | 9.331 | 7.736 | 8.524 | 3.543 | 4.606 | 5.394 | 3.091 | 1.614 | 4.6 | (Lbs) |
| | | G* 1 1/4" | mm | 224.5 | 231 | 233 | 233 | 253 | 228 | 110 | 117 | 137 | 78.5 | 50 | 2.5 | kg |
| | | NPTF 1 1/4" | (in) | 8.839 | 9.094 | 9.173 | 9.961 | 8.189 | 8.976 | 4.331 | 4.606 | 5.394 | 3.091 | 1.969 | 5.5 | (Lbs) |
| | | G* 1 1/2" | mm | 224 | 230.5 | 240 | 260 | 210 | 230 | 120 | 117 | 137 | 78.5 | 60 | 3.1 | kg |
| | | NPTF 1 1/2" | (in) | 8.819 | 9.075 | 9.449 | 10.236 | 8.268 | 9.055 | 4.724 | 4.606 | 5.394 | 3.091 | 2.362 | 6.8 | (Lbs) |
| | | G* 2" | mm | 247 | 253.5 | 251.5 | 271.5 | 216.5 | 236.5 | 150 | 117 | 137 | 78.5 | 70 | 3.9 | kg |
| | | NPTF 2" | (in) | 9.724 | 9.980 | 9.902 | 10.689 | 8.524 | 9.311 | 5.906 | 4.606 | 5.394 | 3.091 | 2.756 | 8.6 | (Lbs) |
| | | G* 2 1/2" | mm | 276 | 282.5 | 273 | 293 | 229.5 | 249.5 | 190 | 117 | 137 | 78.5 | 87 | 6.0 | kg |
| | | NPTF 2 1/2" | (in) | 10.866 | 11.122 | 10.748 | 11.535 | 9.035 | 9.823 | 7.480 | 4.606 | 5.394 | 3.091 | 3.425 | 13.2 | (Lbs) |

(1) Weight of valve without pilot.
For solenoid pilot valve. see dedicated catalog pages.

01533GB-2021/R01
Availability, design and specifications are subject to change without notice. All rights reserved.

## **Dimensions** mm (inches), **Weight** kg (Lbs)

Configurator - CAD Files



**TYPE 04**
**90 mm actuator / Straight seat valve / Stainless steel body**
Fluid entry:
under the disc at 2
above the disc at 1

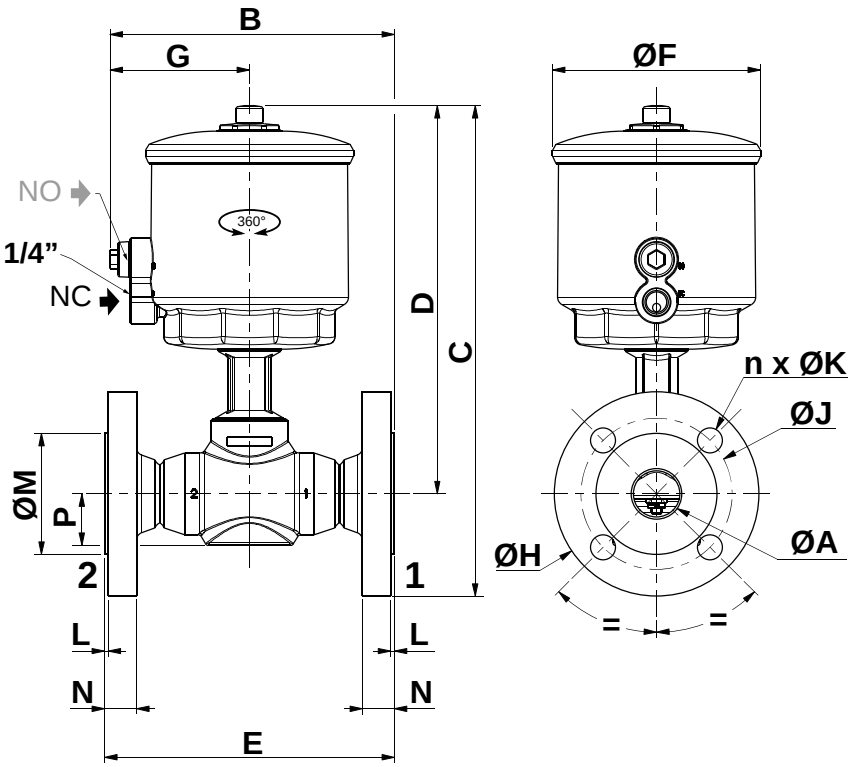


For C2/D2/F1 references, see Fig. I (options 11B) and Fig. II (NAMUR) on page 20)

| DN | | C2 | | D2 | F1 |
|---|---|---|---|---|---|
| | | ISO | ANSI | | |
| 25 | mm | 319.5 | 317 | 262 | 158.5 |
| | (in) | 12.579 | 12.480 | 10.315 | 6.240 |
| 32 | mm | 349.0 | 336.5 | 279 | 168.5 |
| | (in) | 13.740 | 13.248 | 10.984 | 6.634 |
| 40 | mm | 351.5 | 339 | 276.5 | 178.5 |
| | (in) | 13.839 | 13.346 | 10.886 | 7.028 |
| 50 | mm | 369.5 | 362 | 287 | 193.5 |
| | (in) | 14.547 | 14.252 | 11.299 | 7.618 |
| 65 | mm | 404.5 | 402 | 312 | 223.5 |
| | (in) | 15.925 | 15.827 | 12.283 | 8.799 |

**DN65 - ISO (EN-1092-1)**

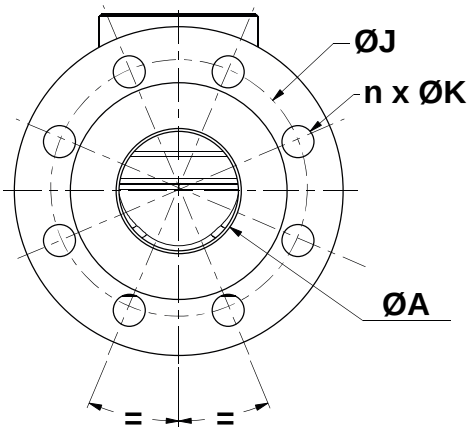


| Type | Actuator diameter | DN | | ØA | B | C | | D | E | ØF | G | ØH | | ØJ | |
|---|---|---|---|---|---|---|---|---|---|---|---|---|---|---|---|
| | | | | | | ISO | ANSI | | | | | ISO | ANSI | ISO | ANSI |
| 04 | 90 mm | 25 | mm | 28.5 | 158.5 | 276 | 273.5 | 218.5 | 160 | 117 | 78.5 | 115 | 110 | 85 | 79.4 |
| | | | (in) | 1.122 | 6.240 | 10.866 | 10.768 | 8.602 | 6.299 | 4.606 | 3.091 | 4.528 | 4.331 | 3.346 | 3.126 |
| | | 32 | mm | 37.2 | 168.5 | 305.5 | 293 | 235.5 | 180 | 117 | 78.5 | 140 | 115 | 100 | 88.9 |
| | | | (in) | 1.465 | 6.634 | 12.028 | 11.535 | 9.272 | 7.087 | 4.606 | 3.091 | 5.512 | 4.528 | 3.937 | 3.500 |
| | | 40 | mm | 43.1 | 178.5 | 307.5 | 295 | 232.5 | 200 | 117 | 78.5 | 150 | 125 | 110 | 98.4 |
| | | | (in) | 1.697 | 7.028 | 12.106 | 11.614 | 9.154 | 7.874 | 4.606 | 3.091 | 5.906 | 4.921 | 4.331 | 3.874 |
| | | 50 | mm | 54.5 | 193.5 | 326 | 318.5 | 243.5 | 230 | 117 | 78.5 | 165 | 150 | 125 | 120.7 |
| | | | (in) | 2.146 | 7.618 | 12.835 | 12.539 | 9.587 | 9.055 | 4.606 | 3.091 | 6.496 | 5.906 | 4.921 | 4.752 |
| | | 65 | mm | 70.3 | 223.5 | 360.5 | 358 | 268 | 290 | 117 | 78.5 | 185 | 180 | 145 | 139.7 |
| | | | (in) | 2.768 | 8.799 | 14.193 | 14.094 | 10.551 | 11.417 | 4.606 | 3.091 | 7.283 | 7.087 | 5.709 | 5.500 |

| DN | | ØA | n x ØK | | L | | M | | N | | P | Weight (1) | | |
|---|---|---|---|---|---|---|---|---|---|---|---|---|---|---|
| | | | ISO | ANSI | ISO | ANSI | ISO | ANSI | ISO | ANSI | | ISO | ANSI | |
| 25 | mm | 28.5 | 4 X 14 | 4 X 16 | 2 | 1.5 | 68 | 50.8 | 18 | 14.2 | 29 | 4.9 | 4.2 | kg |
| | (in) | 1.122 | 4 X 0.551 | 4 X 0.63 | 0.079 | 0.059 | 2.677 | 2.000 | 0.709 | 0.559 | 1.142 | 10.9 | 9.3 | (Lbs) |
| 32 | mm | 37.2 | 4 X 18 | 4 X 16 | 2 | 1.5 | 78 | 63.5 | 18 | 15.8 | 32.5 | 6.8 | 5.3 | kg |
| | (in) | 1.465 | 4 X 0.709 | 4 X 0.63 | 0.079 | 0.059 | 3.071 | 2.500 | 0.709 | 0.622 | 1.280 | 15.0 | 11.8 | (Lbs) |
| 40 | mm | 43.1 | 4 X 18 | 4 X 16 | 3 | 1.5 | 88 | 73 | 18 | 17.4 | 36.85 | 7.8 | 6.6 | kg |
| | (in) | 1.697 | 4 X 0.709 | 4 X 0.63 | 0.118 | 0.059 | 3.465 | 2.874 | 0.709 | 0.685 | 1.451 | 17.3 | 14.5 | (Lbs) |
| 50 | mm | 54.5 | 4 X 18 | 4 X 19.1 | 3 | 1.5 | 102 | 92.1 | 20 | 19 | 42.5 | 10.6 | 9.5 | kg |
| | (in) | 2.146 | 4 X 0.709 | 4 X 0.752 | 0.118 | 0.059 | 4.016 | 3.626 | 0.787 | 0.748 | 1.673 | 23.3 | 21.0 | (Lbs) |
| 65 | mm | 70.3 | 8 X 18 | 4 X 19.1 | 3 | 1.5 | 122 | 104.8 | 22 | 22.2 | 59 | 15.3 | 15.4 | kg |
| | (in) | 2.768 | 8 X 0.709 | 4 X 0.752 | 0.118 | 0.059 | 4.803 | 4.126 | 0.866 | 0.874 | 2.323 | 33.7 | 33.9 | (Lbs) |

(1) Weight of valve without pilot.
For solenoid pilot valve. see dedicated catalog pages.

01533GB-2021/R01
Availability, design and specifications are subject to change without notice. All rights reserved.

# ASCO™ Pneumatic Angle and Straight Seat Valves

## Dimensions mm (inches), Weight kg (Lbs)

Configurator - CAD Files



**TYPE 05**
**125 mm actuator/ Angle seat valve / Stainless steel body**
Fluid entry:
under the disc at 2
above the disc at 1

**NC**
entry under the disc at 2

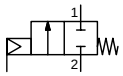


**NO**
entry under the disc at 2

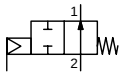


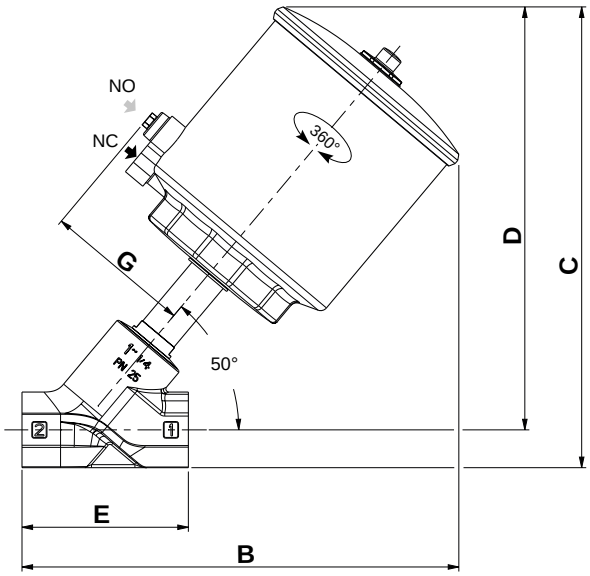


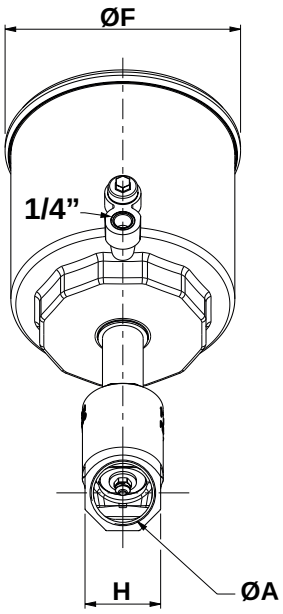


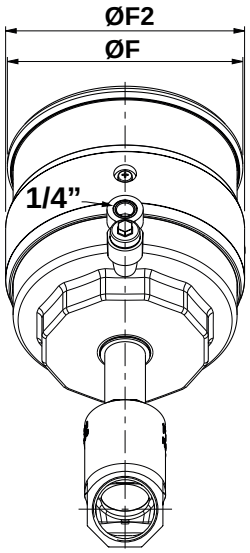


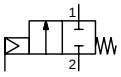


Manual safety device (**11B**)
(NC only)

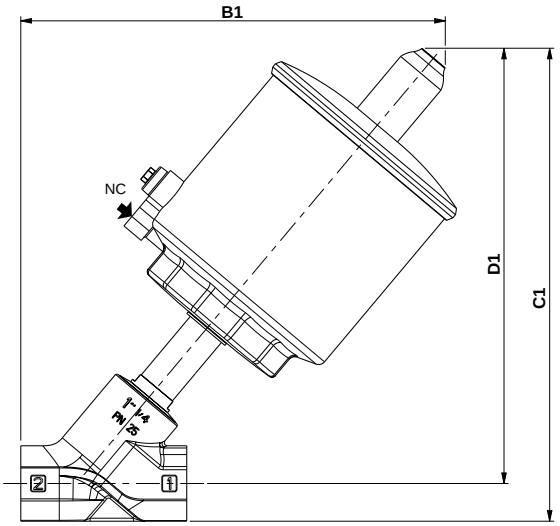


NAMUR plate
(NC / NO)

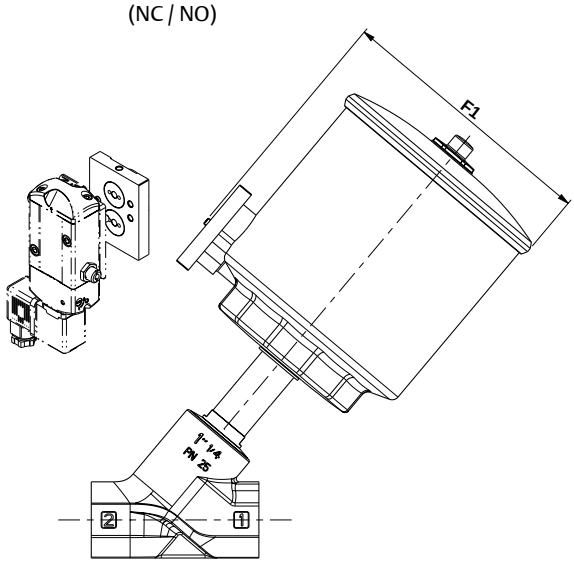


| Type | Actuator diameter | ØA | | B | B1 | C | C1 | D | D1 | E | ØF (NC/NO) | F1 | ØF2 (NO) | G | H | Weight (1) | |
|---|---|---|---|---|---|---|---|---|---|---|---|---|---|---|---|---|---|
| 05 | 125 mm | G* 1 1/4” | mm | 289 | 281.5 | 305 | 313.5 | 280 | 288.5 | 110 | 156 | 175 | 158 | 97 | 50 | 5.5 | kg |
| | | NPTF 1 1/4” | (in) | 11.378 | 11.083 | 12.008 | 12.343 | 11.024 | 11.358 | 4.331 | 6.142 | 6.890 | 6.220 | 3.819 | 1.969 | 12.1 | (Lbs) |
| | | G* 1 1/2” | mm | 290 | 282.5 | 313 | 321.5 | 283 | 291.5 | 120 | 156 | 175 | 158 | 97 | 60 | 6 3 | kg |
| | | NPTF 1 1/2” | (in) | 11.417 | 11.122 | 12.323 | 12.657 | 11.142 | 11.476 | 4.724 | 6.142 | 6.890 | 6.220 | 3.819 | 2.362 | 13.9 | (Lbs) |
| | | G* 2” | mm | 314.5 | 307 | 327 | 335.5 | 292 | 300.5 | 150 | 156 | 175 | 158 | 97 | 70 | 7.2 | kg |
| | | NPTF 2” | (in) | 12.382 | 12.087 | 12.874 | 13.209 | 11.496 | 11.831 | 5.906 | 6.142 | 6.890 | 6.220 | 3.819 | 2.756 | 15.9 | (Lbs) |
| | | G* 2 1/2” | mm | 346 | 338.5 | 351 | 359.5 | 307.5 | 316 | 190 | 156 | 175 | 158 | 97 | 70 | 7.2 | kg |
| | | NPTF 2 1/2” | (in) | 13.622 | 13.327 | 13.819 | 14.154 | 12.106 | 12.441 | 7.480 | 6.142 | 6.890 | 6.220 | 3.819 | 3.425 | 20.9 | (Lbs) |

(1) Weight of valve without pilot.
For solenoid pilot valve. see dedicated catalog pages.

01533GB-2021/R01
Availability, design and specifications are subject to change without notice. All rights reserved.

## **Dimensions** mm (inches), **Weight** kg (Lbs)



**TYPE 05**
**125 mm actuator/ Straight seat valve / Stainless steel body**
Fluid entry:
under the disc at 2
above the disc at 1

Configurator - CAD Files

**NC**
entry under the disc at 2

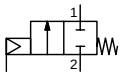


**NO**
entry under the disc at 2

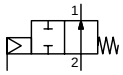


For C2/D2/F1 references, see Fig. I (options 11B) and Fig. II (NAMUR) on page 20)

| DN | | C2 ISO | C2 ANSI | D2 | F1 |
|---|---|---|---|---|---|
| 32 | mm | 428 | 415.5 | 358 | 187 |
| | (in) | 16.850 | 16.358 | 14.094 | 7.362 |
| 40 | mm | 432 | 419.5 | 357 | 197 |
| | (in) | 17.008 | 16.516 | 14.055 | 7.756 |
| 50 | mm | 452.5 | 445 | 370 | 212 |
| | (in) | 17.815 | 17.520 | 14.567 | 8.346 |
| 65 | mm | 491 | 489 | 399 | 242 |
| | (in) | 19.331 | 19.252 | 15.709 | 9.528 |

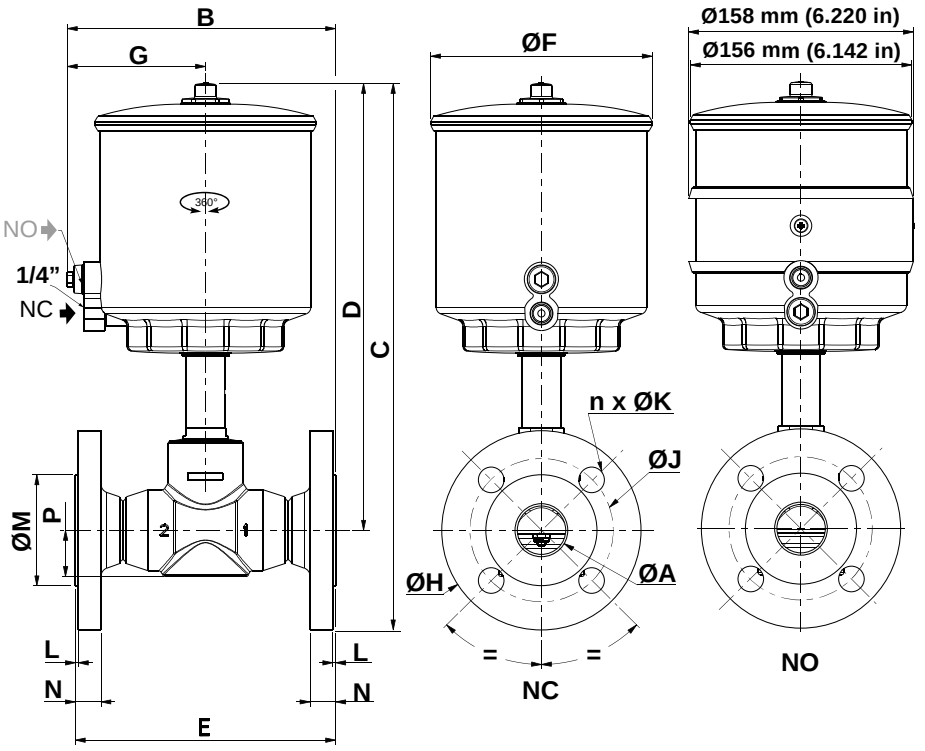


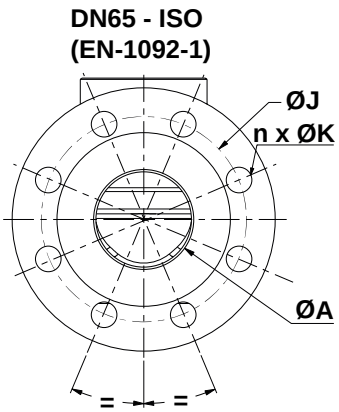


| Type | Actuator diameter | DN | | ØA | B | C ISO | C ANSI | D | E | ØF | G | ØH ISO | ØH ANSI | ØJ ISO | ØJ ANSI |
|---|---|---|---|---|---|---|---|---|---|---|---|---|---|---|---|
| 05 | 125 mm | 32 | mm | 37.2 | 187 | 384 | 371.5 | 314 | 180 | 156 | 97 | 140 | 115 | 100 | 88.9 |
| | | | (in) | 1.465 | 7.362 | 15.118 | 14.626 | 12.362 | 7.087 | 6.142 | 3.819 | 5.512 | 4.528 | 3.937 | 3.500 |
| | | 40 | mm | 43.1 | 197 | 388.5 | 376 | 313.5 | 200 | 156 | 97 | 150 | 125 | 110 | 98.4 |
| | | | (in) | 1.697 | 7.756 | 15.295 | 14.803 | 12.343 | 7.874 | 6.142 | 3.819 | 5.906 | 4.921 | 4.331 | 3.874 |
| | | 50 | mm | 54.5 | 212 | 408.5 | 401 | 326 | 230 | 156 | 97 | 165 | 150 | 125 | 120.7 |
| | | | (in) | 2.146 | 7.618 | 12.835 | 12.539 | 9.587 | 9.055 | 4.606 | 3.091 | 6.496 | 5.906 | 4.921 | 4.752 |
| | | 65 | mm | 70.3 | 242 | 447.5 | 445 | 355 | 290 | 156 | 97 | 185 | 180 | 145 | 139.7 |
| | | | (in) | 2.768 | 9.528 | 17.618 | 17.520 | 13.976 | 11.417 | 6.142 | 3.819 | 7.283 | 7.087 | 5.709 | 5.500 |

| DN | | ØA | n x ØK ISO | n x ØK ANSI | L ISO | L ANSI | M ISO | M ANSI | N ISO | N ANSI | P | Weight (1) ISO | Weight (1) ANSI | |
|---|---|---|---|---|---|---|---|---|---|---|---|---|---|---|
| 32 | mm | 37.2 | 4 X 18 | 4 X 16 | 2 | 1.5 | 78 | 63.5 | 18 | 15.8 | 32.5 | 9.8 | 8.3 | kg |
| | (in) | 1.465 | 4 X 0.709 | 4 X 0.63 | 0.079 | 0.059 | 3.071 | 2.500 | 0.709 | 0.622 | 1.280 | 21.6 | 18.4 | (Lbs) |
| 40 | mm | 43.1 | 4 X 18 | 4 X 16 | 3 | 1.5 | 88 | 73 | 18 | 17.4 | 36.85 | 11.0 | 9.8 | kg |
| | (in) | 1.697 | 4 X 0.709 | 4 X 0.63 | 0.118 | 0.059 | 3.465 | 2.874 | 0.709 | 0.685 | 1.451 | 24.3 | 21.6 | (Lbs) |
| 50 | mm | 54.5 | 4 X 18 | 4 X 19.1 | 3 | 1.5 | 102 | 92.1 | 20 | 19 | 42.5 | 13.9 | 12.9 | kg |
| | (in) | 2.146 | 4 X 0.709 | 4 X 0.752 | 0.118 | 0.059 | 4.016 | 3.626 | 0.787 | 0.748 | 1.673 | 30.6 | 28.4 | (Lbs) |
| 65 | mm | 70.3 | 8 X 18 | 4 X 19.1 | 3 | 1.5 | 122 | 104.8 | 22 | 22.2 | 59 | 18.8 | 18.9 | kg |
| | (in) | 2.768 | 8 X 0.709 | 4 X 0.752 | 0.118 | 0.059 | 4.803 | 4.126 | 0.866 | 0.874 | 2.323 | 41.4 | 41.6 | (Lbs) |

(1) Weight of valve without pilot.
For solenoid pilot valve. see dedicated catalog pages.

01533GB-2021/R01
Availability, design and specifications are subject to change without notice. All rights reserved.