Datasheet - SZ 200

Solenoid interlock / AZM 200 / Accessories / Lockout tag SZ 200

☒ Preferred typ



(Minor differences between the printed image and the original product may exist!)

- Suitable for mounting inside and outside of the hazardous area
- To prevent inadvertent closing, e.g. during maintenance
- For complex plant
- Prevents actuation of the switch
- Lockout tag with 5 circular holes

Ordering details

Product type description	SZ 200
Article number	101194438
EAN code	4030661359014
eCl@ss	27-27-92-91

Global Properties

Product name	Sperrzange SZ 200
Weight	834 g

Documents

Mounting and wiring instructions (de, en, fr) 535 kB, 02.12.2008
Code: m_sz2p01

Images

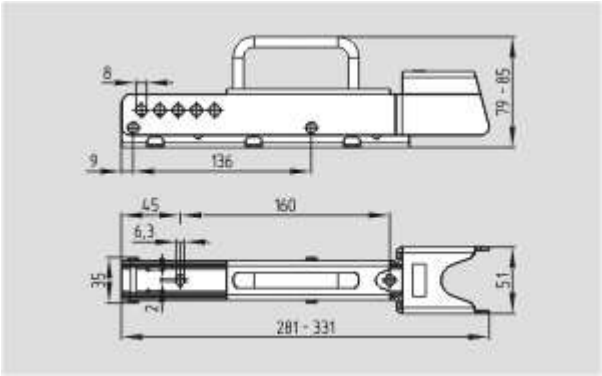

Dimensional drawing (miscellaneous)