Product data sheet
Characteristics

XCMN2115L2
limit switch XCMN - thermoplastic roller lever - 1NC+1NO - snap - 2 m



Main

Range of product	OsiSense XC
Series name	Standard format
Product or component type	Limit switch
Device short name	XCMN
Sensor design	Miniature
Body type	Fixed
Head type	Rotary head
Material	Plastic
Body material	Plastic
Head material	Zamak
Fixing mode	By the body
Movement of operating head	Rotary
Type of operator	Spring return roller lever thermoplastic
Type of approach	Lateral approach, 2 directions
Number of poles	2
Contacts type and composition	1 NC + 1 NO
Contact operation	Snap action

Complementary

Tracks	24/31 mm
Switch actuation	By 30° cam
Electrical connection	Fixed cable
Cable length	2 m
Cable composition	4 x 0.75 mm²
Wire insulation material	PvR
Contacts insulation form	Zb
Positive opening	With

Disclaimer: This documentation is not intended as a substitute for and is not to be used for determining suitability or reliability of these products for specific user applications

Positive opening minimum force	0.5 N
Minimum force for tripping	0.1 N
Maximum actuation speed	1.5 m/s
Contact code designation	B300, AC-15 (Ue = 240 V), Ie = 1.5 A conforming to EN/IEC 60947-5-1 appendix A R300, DC-13 (Ue = 250 V), Ie = 0.1 A conforming to EN/IEC 60947-5-1 appendix A
[Ui] rated insulation voltage	300 V (pollution degree 3) conforming to UL 508 400 V (pollution degree 3) conforming to IEC 60947-5-1 300 V (pollution degree 3) conforming to CSA C22.2 No 14
Maximum resistance across terminals	25 MOhm conforming to IEC 60255-7 category 3
[Uimp] rated impulse withstand voltage	4 kV IEC 60664 4 kV IEC 60947-1
Short-circuit protection	6 A cartridge fuse, type gG
Electrical durability	5000000 cycles, DC-13, 120 V, 1 W, operating rate <60 cyc/mn, load factor: 0.5 conforming to IEC 60947-5-1 appendix C 5000000 cycles, DC-13, 24 V, 3 W, operating rate <60 cyc/mn, load factor: 0.5 conforming to IEC 60947-5-1 appendix C 5000000 cycles, DC-13, 48 V, 2 W, operating rate <60 cyc/mn, load factor: 0.5 conforming to IEC 60947-5-1 appendix C
Mechanical durability	5000000 cycles
Width	30 mm
Height	94 mm
Depth	16 mm
Net weight	0.1 kg

Environment

Shock resistance	25 gn for 18 ms conforming to IEC 60068-2-27
Vibration resistance	5 gn (f= 10…500 Hz) conforming to IEC 60068-2-6
IP degree of protection	IP65 conforming to IEC 60529
IK degree of protection	IK04 conforming to EN 50102
Electrical shock protection class	Class II conforming to IEC 61140 Class II conforming to NF C 20-030
Ambient air temperature for operation	-25…70 °C
Ambient air temperature for storage	-40…70 °C
Protective treatment	TC
Product certifications	CCC CSA UL
Standards	EN/IEC 60947-5-1 EN/IEC 60204-1 CSA C22.2 No 14 UL 508

Offer Sustainability

Sustainable offer status	Green Premium product
REACh Regulation	REACh Declaration
EU RoHS Directive	Pro-active compliance (Product out of EU RoHS legal scope) EU RoHS Declaration
Mercury free	Yes
RoHS exemption information	Yes
Environmental Disclosure	Product Environmental Profile
Circularity Profile	End of Life Information

Contractual warranty

Warranty	18 months

Dimensions

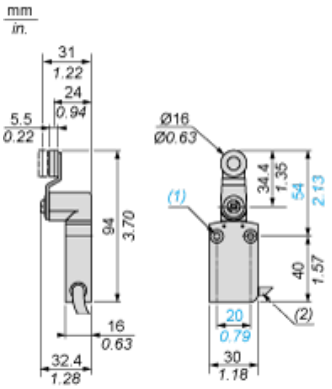

(1) 2 fixing holes Ø 4.2 mm, counterbored Ø 8 mm by 4 mm deep.
(2) External diameter 7.5 mm.

Mounting

Sweep of Connecting Cable

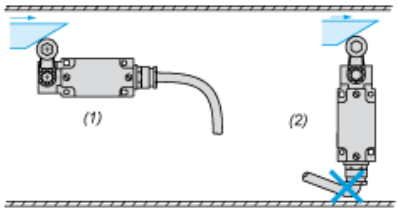

(1) Recommended
(2) To be avoided

Mounting with Rotary Heads and Levers

Type of Cam

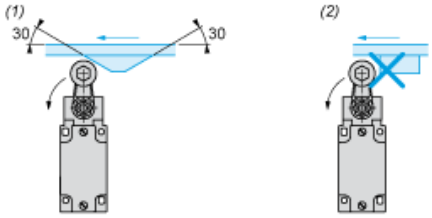

(1) Recommended
(2) To be avoided

Setting-up with Head ZCE01 and ZCE09

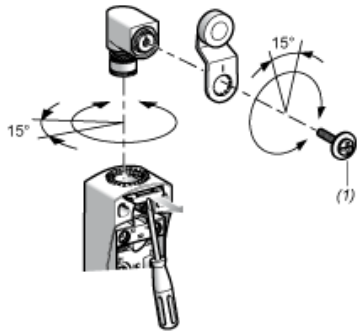

(1) Tightening torque (Min : 1) (Max : 1.5)

Wiring diagram

2-pole NC + NO Snap Action

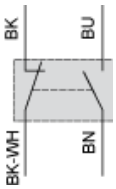

(BK) Black
(BK-WH) Black White
(BN) Brown
(BU) Blue

Characteristics of Actuation

Switch Actuation by 30° Cam

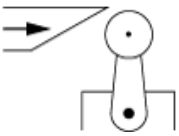

Functionnal Diagram

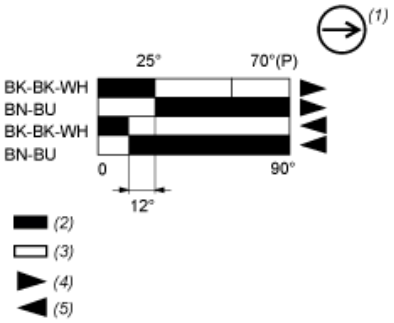

(P)	Positive opening point
(1)	NC contact with positive opening operation
(2)	Closed
(3)	Open
(4)	Tripping
(5)	Resetting
(BK)	Black
(BK-WH)	Black White
(BN)	Brown
(BU)	Blue