MURR ELEKTRONIK
stay connected

M12 female recept. A-cod. front

PP-wires 4x0.34 0.2m

Flange female
M12, 4-pole
Front mounting
with multi-strand wire

Link to Product

Illustration





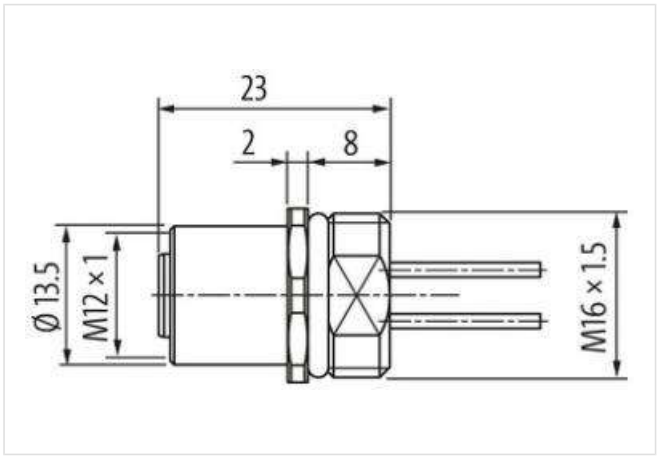

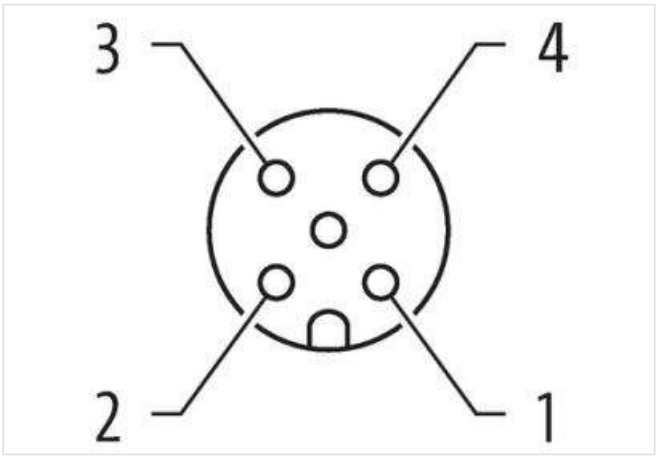

The information in this Product-PDF has been compiled with the utmost care.
Liability for the correctness completeness and topicality of the information is restricted to gross negligence. Version: 2024-01-31

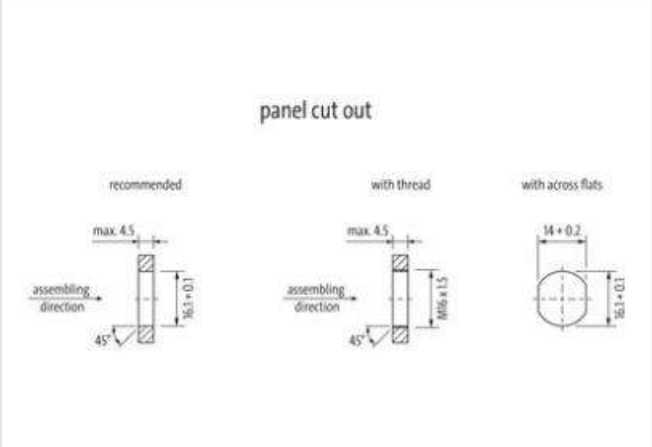

Product may differ from Image

Cable length	0,2 m
Side 1	
Tightening torque	0,6 Nm
Mounting method	inserted, screwed
Coating contact	gold plated
Family construction form	M12
Thread	M12 x 1
Coding	A
Material contact	Copper alloy
Material	Zinc die-casting
No. of poles	4
Degree of protection (EN IEC 60529)	IP67
Side 2	
Coating contact	gold plated
Commercial data	
ECLASS-6.0	27279220
ECLASS-7.0	27440103
ECLASS-8.0	27440103
ECLASS-9.0	27440103
ECLASS-10.1	27440103
ECLASS-11.1	27440103
ECLASS-12.0	27440103
ETIM-5.0	EC001855
customs tariff number	85444290
GTIN	4048879198707
Packaging unit	1
Electrical data | Supply	
Operating voltage AC max.	250 V
Operating voltage DC max.	250 V
Current operating per contact max.	4 A
Diagnostics	
Status indication LED	no

The information in this Product-PDF has been compiled with the utmost care.
Liability for the correctness completeness and topicality of the information is restricted to gross negligence. Version: 2024-01-31

MURR ELEKTRONIK
stay connected

Installation | Connection	
Mounting set	M16 x 1.5
Device protection | Electrical	
Protection NEMA	3, 4, 6P
Additional condition protection degree	inserted, screwed
Pollution Degree	3
Rated surge voltage	2,5 kV
Material group (IEC 60664-1)	I
Mechanical data	
Contour for corrugated hose	without
Mechanical data | Material data	
Coating housing	nickel plated
Coating locking	vermessingt
Coating of fitting	nickel plated
Material gasket	FKM
Locking material	Zinc die-casting
Material screw connection	Zinc die-casting
Mechanical data | Mounting data	
Mounting method	Schraubgewinde
Looking techniques	Schraubgewinde
Environmental characteristics | Climatic	
Operating temperature min.	-25 °C
Operating temperature max.	85 °C
Additional condition temperature range	depending on cable quality
Conformities, approvals	
Product standard	DIN EN 61076-2-101 (M12)
UL 50E	yes
Cable	
No./diameter of wires	4× 0.34 mm²
Wire isolation	PUR
Outer Ø	1.3 mm ±5%
Cable number	971
Temperature range (fixed)	-40...+90 °C
Temperature range (mobile)	-25...+90 °C
Bend radius (fixed)	5× outer Ø

The information in this Product-PDF has been compiled with the utmost care.
Liability for the correctness completeness and topicality of the information is restricted to gross negligence. Version: 2024-01-31