EXPERT 1000 Volt insulated screwdrivers for Phillips® head screws



Description:

- CEI 60900
- ISO 2380-1
- ISO 2380-2
- trimaterial ergonomic handle for comfortable and reliable screwing.
- Screw head color code: yellow.
- Each product is tested under 10,000 Volts.
- Round hardened blade with orange PVC insulation.

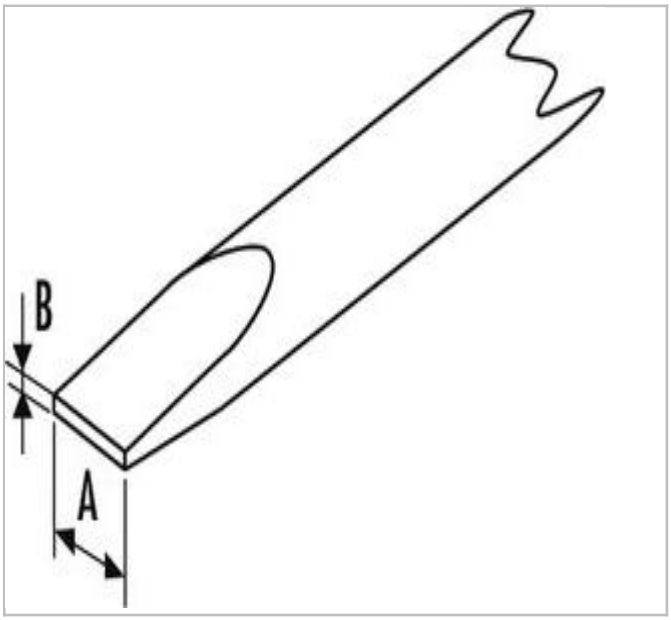

© FACOM 2020

	Diameter [mm]	Length L [mm]	Length [mm]	Weight [g]	Tip Size [mm]
E165414	27	177	177	40	Phillips
E165415	32	205	205	68	Phillips
E165416	32	230	125	89	Phillips
E165421	40	355	150	123	

© FACOM 2020