PS510-100-01-LI2UPN8-H1141/X
Pressure sensor – Relative Pressure: 0…100 Bar

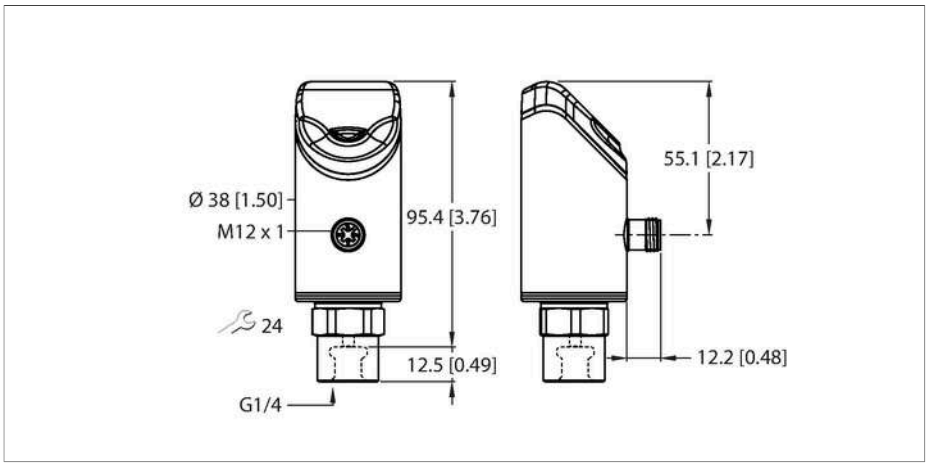



Technical data

Type	PS510-100-01-LI2UPN8-H1141/X
ID no.	100008073
Medium temperature	-30…+80 °C
Application area	Liquids and gases
Pressure range	
Relative pressure bar	0…100 bar rel.
	0…1450.38 psi
	0…10 MPa
Admissible overpressure	≤ 300 bar
Burst pressure	≥ 400 bar
Response time	≤ 3 ms
Electrical data	
Operating voltage	18…33 VDC
Short-circuit/reverse polarity protection	yes, cyclic / yes (voltage supply)
Capacitive load	100 nF
Insulation class	III
Outputs	
Output 1	Switching output or IO-Link mode
Output 2	Analog output (current/voltage) or switching output
Switching output	
Communication protocol	IO-Link
Output function	NO/NC, PNP/NPN
Accuracy	± 0.25 % of final value BSL
Rated operational current	0.25 A
Switching frequency	≤ 300 Hz
Switching point distance	≥ 0.5 %

Features

- 4-digit, two-colored, 14-segment display, rotatable by 180°
- Housing is rotatable after plugging the process connection
- Metal measuring cell
- Peak pressure aperture
- 18…33 VDC
- NO/NC contact, PNP/NPN output, analog output (current/voltage), IO-Link
- Process connection G1/4" female thread
- Plug-in device, M12 × 1

Wiring diagram

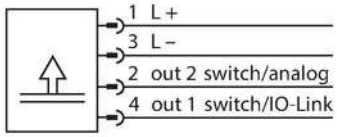

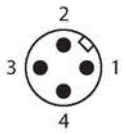

Functional principle

The pressure sensors from the P510 product series operate with fully welded metal measuring cells. As a result of the pressure acting on the metal substrate, a signal that is proportional to the pressure is generated and processed electronically. The processed signal is available either as a switching or an analog output with an accuracy of 0.25% of full scale. The rotatable sensor body and a variety of process connections guarantee flexible process integration.

PS510-100-01-LI2UPN8-H1141/X| 27-04-2021 18-15 | Technical modifications reserved

Technical data

Switch point:	(min. + 0.005 x range) up to 100 % of full scale
Release point(s)	min. up to (SP - 0.005 × range)
Switching cycles	≥ 100 mil.
Analog output	
Current output	4…20 mA
High level signal current	20.5 mA
Low level signal current	3.8 mA
Load resistance, current output	≤ 0.5 kΩ
Voltage output	0…10 V
Load resistance voltage output	≥ 8 kΩ
Accuracy LHR	± 0.25 % FS BSL
IO-Link	
IO-Link specification	V 1.1
IO-Link port type	Class A
Transmission physics	corresponds to 3-wire physics (PHY2)
Frame type	2.2
Transmission rate	COM 2/38.4 kbps
Process data width	16 bit
Measured value information	14 bit
Switchpoint information	2 bit
Programming	FDT/DTM
Accuracy	± 0.25 % of full scale BSL
Included in the SIDI GSDML	Yes
Programming	
Programming options	start/end value analog output; switch/release points; PNP/NPN; NO/NC contact; hysteresis/window function; damping; pressure unit; peak pressure memory
Mechanical data	
Housing material	Stainless-steel/Plastic, 1.4404 (AISI 316L)/Grilamid TR90 UV
Materials (contact with media)	Stainless steel 1.4404 (AISI 316L)/1.4542 (AISI 630)
Process connection	G 1/4" female thread
Wrench size pressure connection / coupling nut	24
Max. tightening torque of housing nut	35 Nm
Electrical connection	Connectors, M12 × 1
Protection class	IP6K6K / 6K7 / 6K9K
Environmental conditions	
Ambient temperature	-40…+80 °C
Storage temperature	-40…+100 °C
Shock resistance	50 g (11 ms) , DIN EN 60068-2-27

PS510-100-01-LI2UPN8-H1141/X| 27-04-2021 18-15 | Technical modifications reserved

Technical data

EMV	EN 61000-4-2 ESD:4 kV CD / 8 kV AD EN 61000-4-3 HF radiated: 15 V/m EN 61000-4-4 Burst: 2 kV EN 61000-4-6 HF cable bound: 10 V EN 61000-6-2 0.5 kV, 42 Ω EN 61326-2-3
Reference conditions acc. to IEC 61298-1	
Temperature	15…+25 °C
Atmospheric pressure	860…1030 hPa abs.
Humidity	45…75 % rel.
Auxiliary power	24 VDC
Display functions	
Display	4-digit 12-segment display, rotatable by 180°, red or green
Switching state	2 × LEDs, Yellow
Unit display	5 x LEDs green (bar, psi, kPa, MPa, misc)
Temperature behaviour	
Temperature coefficient span T_{kS}	± 0.1 % of full scale/10 K
Temperature coefficient zero point Tk0	± 0.1 % of full scale/10 K
MTTF	100 years acc. to SN 29500 (Ed. 99) 40 °C

Accessories

FAM-30-PA66	100018384
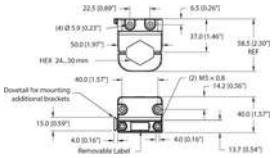	Mounting bracket; variable wrench size 24–30 mm; removable labeling plate 20 × 9 mm

PS510-100-01-LI2UPN8-H1141/X| 27-04-2021 18-15 | Technical modifications reserved

Accessories

Dimension drawing	Type	ID no.	
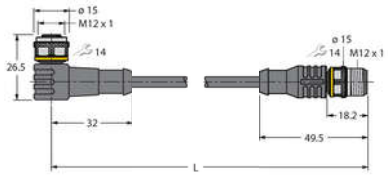	WKC4.4T-2-RSC4.4T/TXL	6625640	Extension cable, M12 female, angled, 4-pin to M12 male, straight, 4-pin, cable length: 2 m, jacket material: PUR, black; cULus approval; other cable lengths and qualities available, see www.turck.com
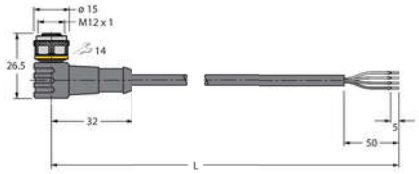	WKC4.4T-2/TXL	6625515	Connection cable, female M12, angled, 4-pin, cable length: 2 m, sheath material: PUR, black; cULus approval; other cable lengths and qualities available, see www.turck.com

Accessories

Dimension drawing	Type	ID no.	
	USB-2-IOL-0002	6825482	IO-Link Master with integrated USB port

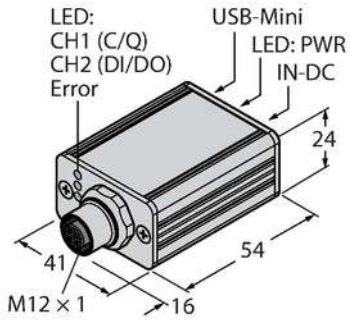

PS510-100-01-LI2UPN8-H1141/X| 27-04-2021 18-15 | Technical modifications reserved