14575-267 COMPACPRO DESKTOP CASE, UNSHIELDED, 4 U, 84 HP, 391 MM



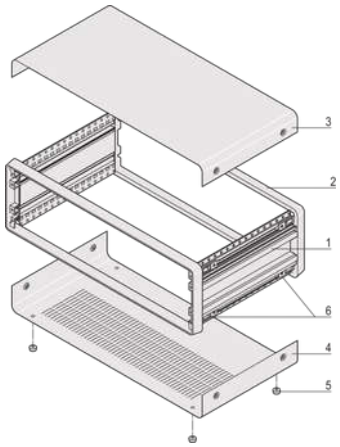

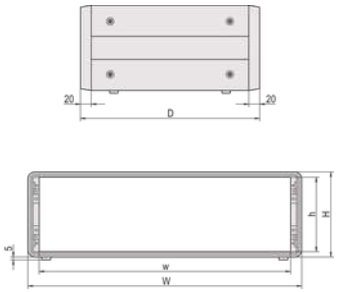

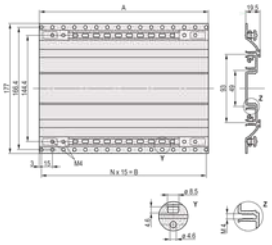

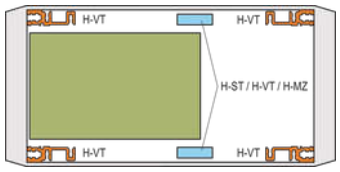

KEY FEATURES

- Desktop case for individual assembly
- Aluminum construction ensures robust solution
- International dimensions in accordance with IEC 6297-3-101
- Side panel with integrated handle function
- Front and rear identical, depth-symmetrical construction
- Ventilation slots in base plate
- IP 20 in accordance with IEC 60529

PRODUCT ATTRIBUTES

- Product Type: Case
- Product Family: CompacPRO
- Type: Case for Individual Electronic Components

Rack Height: 4 U

Height: 191.6 mm

Usable Height: 173.8 mm

Rack Width: 84 HP

Width: 471 mm

Usable Width: 432 mm

Depth: 391 mm

EMC Shielding: No

Static Load: 30 kg

Protection Rating: IP20

Front Frame Construction: Single Piece

Cooling Option: No

Complies With: IEC 60297-3-103

Package Quantity: 1

ADDITIONAL PRODUCT DETAILS

The nVent SCHROFF CompacPRO case provides electronics protection for 19" and individual electronic assemblies. The aluminum die cast frame and profile sidepanels guarantee a robust solution. In addition an extensive accessory range is available.

GND / earthing connections in accordance with

CERTIFICATIONS

RoHS COMPLIANT

North America
All locations
+1.763.422.2661
Chat with us:
schroff.nvent.com

Europe
Straubenhardt, Germany
+49.7082.794.0
Betschdorf, France
+33.3.88.90.64.90
Warsaw, Poland
+48.22.209.98.35
Assago, Italy
+39.02.932.7141
Chat with us:
schroff.nvent.com

Asia
Shanghai, China
+86.21.2412.6943
Qingdao, China
+86.532.8771.6101
Singapore
+65.6768.5800
Shin-Yokohama, Japan
+81.45.476.0271
Chat with us:
schroff.nvent.com

Middle East & India
Dubai, United Arab Emirates
+971.4.378.1700
Bangalore, India
+91.80.6715.2001
Istanbul, Turkey
+90.216.250.7374
Chat with us:
schroff.nvent.com

nVent

Our powerful portfolio of brands:
nVent.com **CADDY ERICO HOFFMAN RAYCHEM SCHROFF TRACER**

© 2023 nVent. All nVent marks and logos are owned or licensed by nVent Services GmbH or its affiliates. All other trademarks are the property of their respective owners.

nVent reserves the right to change specifications without notice.