Technical data sheet
Diffuse sensor with background suppression
Part no.: 50129385
HT3C.XL/4P-200-M12



For Illustration purposes only

Contents

- Technical data
- Dimensioned drawings
- Electrical connection
- Diagrams
- Operation and display
- Part number code
- Notes
- Further information
- Accessories

Technical data

Basic data

Series	3C
Operating principle	Diffuse reflection principle with background suppression
Application	Detection of highly transparent bottles
	Detection of objects with openings
	Detection of transparent films

Special version

Special version	Extra long light spot (XL)

Optical data

Black-white error	< 10% up to 60 mm
Operating range	Guaranteed operating range
Operating range, white 90%	0.005 ... 0.05 m
Operating range, gray 18%	0.005 ... 0.045 m
Operating range, black 6%	0.005 ... 0.04 m
Operating range limit, white 90%	0.005 ... 0.1 m
Operating range limit, gray 18%	0.005 ... 0.09 m
Operating range limit, black 6%	0.005 ... 0.08 m
Operating range limit	Typical operating range
Adjustment range	20 ... 100 mm
Beam path	Divergent
Light source	LED, Red
Wavelength	633 nm
Transmitted-signal shape	Pulsed
LED group	Exempt group (in acc. with EN 62471)
Light spot size [at sensor distance]	3 mm x 40 mm [50 mm]
Type of light spot geometry	Rectangular

Electrical data

Protective circuit	Polarity reversal protection
	Short circuit protected

Performance data

Supply voltage U_B	10 ... 30 V, DC, Incl. residual ripple
Residual ripple	0 ... 15 %, From U_B
Open-circuit current	0 ... 15 mA

Outputs

Number of digital switching outputs	2 Piece(s)

Switching outputs

Type	Digital switching output
Voltage type	DC
Switching current, max.	100 mA
Switching voltage	high: ≥(U_B-2V)
	low: ≤ 2 V

Switching output 1

Assignment	Connection 1, pin 4
Switching element	Transistor, PNP
Switching principle	Light switching

Switching output 2

Assignment	Connection 1, pin 2
Switching element	Transistor, PNP
Switching principle	Dark switching

Time behavior

Switching frequency	1,000 Hz
Response time	0.5 ms
Readiness delay	300 ms
Response jitter	166 µs

Connection

Number of connections	1 Piece(s)

Connection 1

Function	Signal OUT
	Voltage supply
Type of connection	Cable with connector
Cable length	200 mm
Sheathing material	PUR
Cable color	Black
Wire cross section	0.2 mm²
Thread size	M12
Type	Male
Material	Metal
No. of pins	4 -pin
Encoding	A-coded

Mechanical data

Dimension (W x H x L)	11.4 mm x 34.2 mm x 18.3 mm
Housing material	Plastic
Plastic housing	PC-ABS
Lens cover material	Plastic / PMMA
Net weight	20 g
Housing color	Red
Type of fastening	Through-hole mounting
	Via optional mounting device
Recommended tightening torque for M3 fastening	0.9 N·m
Compatibility of materials	ECOLAB

Operation and display

Type of display	LED
Number of LEDs	2 Piece(s)
Operational controls	Multiturn potentiometer
Function of the operational control	Range adjustment

Environmental data

Ambient temperature, operation	-40 ... 60 °C
Ambient temperature, storage	-40 ... 70 °C

Certifications

Degree of protection	IP 67
	IP 69K
Protection class	III
Approvals	c UL US
Standards applied	IEC 60947-5-2

Technical data

Customs tariff number	85365019
ECLASS 5.1.4	27270904
ECLASS 8.0	27270904
ECLASS 9.0	27270904
ECLASS 10.0	27270904
ECLASS 11.0	27270904
ECLASS 12.0	27270903
ECLASS 13.0	27270903
ECLASS 14.0	27270903
ECLASS 15.0	27270903
ETIM 5.0	EC002719
ETIM 6.0	EC002719
ETIM 7.0	EC002719
ETIM 8.0	EC002719
ETIM 9.0	EC002719
ETIM 10.0	EC002719

Dimensioned drawings

All dimensions in millimeters

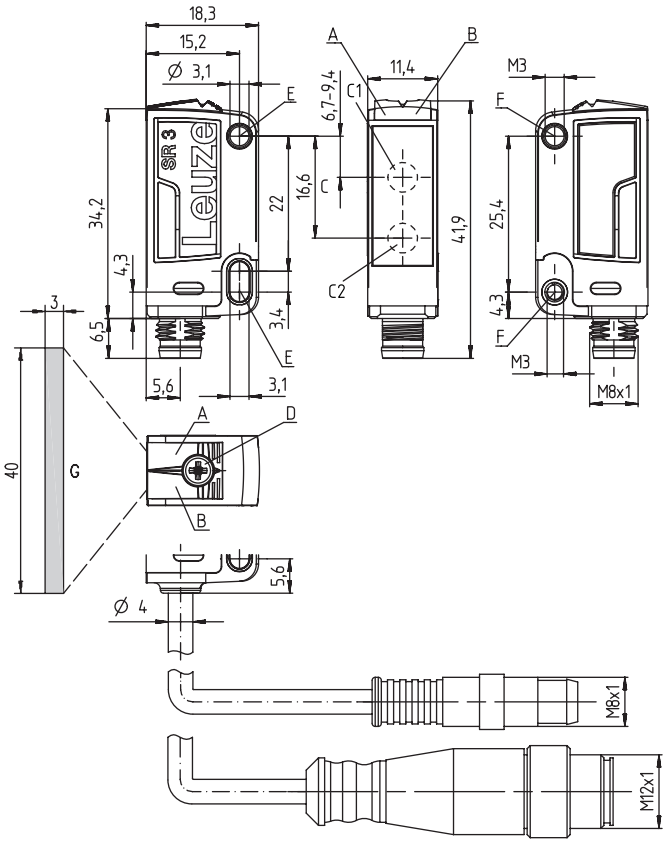

A Green LED
B Yellow LED
C Optical axis
C1 Receiver
C2 Transmitter
D Multiturn potentiometer
E Mounting sleeve (standard)
F Threaded sleeve (3C.B series)
G Light spot 3 mm x 40 mm at a range of 50 mm

Electrical connection

Connection 1

Function	Signal OUT
	Voltage supply
Type of connection	Cable with connector
Cable length	200 mm
Sheathing material	PUR
Cable color	Black
Wire cross section	0.2 mm²
Thread size	M12
Type	Male
Material	Metal
No. of pins	4 -pin
Encoding	A-coded

Pin	Pin assignment
1	V+
2	OUT 2
3	GND
4	OUT 1

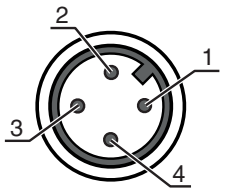

Diagrams

Typ. response behavior (white 90 %)

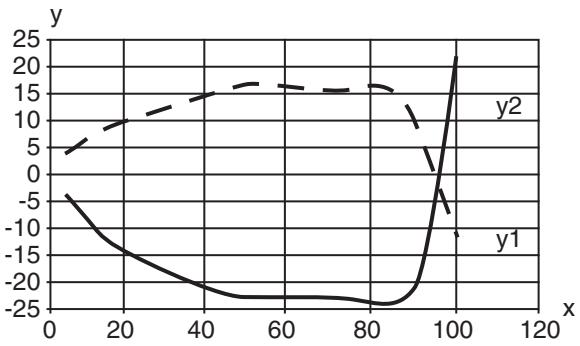

x Distance [mm]
y Misalignment [mm]

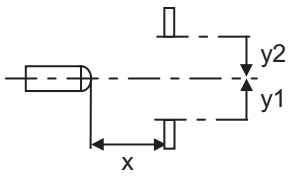

Diagrams

Typ. black/white behavior

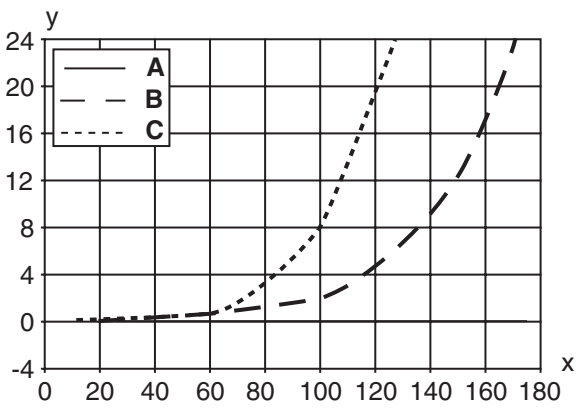

x Range [mm]
y Reduction of range [mm]

A White 90%
B Gray 18%
C Black 6%

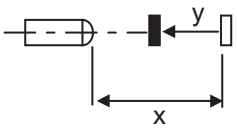

Operation and display

LED	Display	Meaning
1	Green, continuous light	Operational readiness
2	Yellow, continuous light	Object detected

Part number code

Part designation: **AAA 3C d EE-f.GG H/i J-K**

AAA3C	**Operating principle / construction** HT3C: Diffuse reflection sensor with background suppression LS3C: Throughbeam photoelectric sensor transmitter LE3C: Throughbeam photoelectric sensor receiver PRK3C: Retro-reflective photoelectric sensor with polarization filter ODT3C: Distance diffuse sensor with background suppression
d	**Light type** n/a: red light I: infrared light
EE	**Light source** n/a: LED L1: laser class 1 L2: laser class 2 PP: Power PinPoint® LED
f	**Preset range (optional)** n/a: operating range acc. to data sheet xxxF: Preset range [mm] 2M: operating range of 2 meters
GG	**Equipment** n/a: standard A: Autocollimation principle (single lens) for positioning tasks B: Housing model with two M3 threaded sleeves, brass F: Permanently set range L: Long light spot S: small light spot T: autocollimation principle (single lens) for highly transparent bottles without tracking TT: autocollimation principle (single lens) for highly transparent bottles with tracking V: V-optics XL: Extra long light spot X: extended model HF: Suppression of HF illumination (LED)

Part number code

H	**Operating range adjustment** n/a with HT: range adjustable via 8-turn potentiometer n/a with retro-reflective photoelectric sensors (PRK): operating range not adjustable 1: 270° potentiometer 3: teach-in via button 6: auto-teach
i	**Switching output/function OUT 1/IN: Pin 4 or black conductor** 2: NPN transistor output, light switching N: NPN transistor output, dark switching 4: PNP transistor output, light switching P: PNP transistor output, dark switching 6: push-pull switching output, PNP light switching, NPN dark switching G: Push-pull switching output, PNP dark switching, NPN light switching L: IO-Link interface (SIO mode: PNP light switching, NPN dark switching) 8: activation input (activation with high signal) X: pin not used 1: IO-Link / light switching (NPN) / dark switching (PNP)
J	**Switching output / function OUT 2/IN: pin 2 or white conductor** 2: NPN transistor output, light switching N: NPN transistor output, dark switching 4: PNP transistor output, light switching P: PNP transistor output, dark switching 6: push-pull switching output, PNP light switching, NPN dark switching G: Push-pull switching output, PNP dark switching, NPN light switching W: warning output X: pin not used 8: activation input (activation with high signal) 9: deactivation input (deactivation with high signal) T: teach-in via cable
K	**Electrical connection** n/a: cable, standard length 2000 mm, 4-wire 5000: cable, standard length 5000 mm, 4-wire M8: M8 connector, 4-pin (plug) M8.3: M8 connector, 3-pin (plug) 200-M8: cable, length 200 mm with M8 connector, 4-pin, axial (plug) 200-M8.3: cable, length 200 mm with M8 connector, 3-pin, axial (plug) 200-M12: cable, length 200 mm with M12 connector, 4-pin, axial (plug)

Note

- A list with all available device types can be found on the Leuze website at www.leuze.com.

Notes

Observe intended use!

- This product is not a safety sensor and is not intended as personnel protection.
- The product may only be put into operation by competent persons.
- Only use the product in accordance with its intended use.

For UL applications:

- For UL applications, use is only permitted in Class 2 circuits in accordance with the NEC (National Electric Code).
- These proximity switches shall be used with UL Listed Cable assemblies rated 30V, 0.5A min, in the field installation, or equivalent (categories: CYJV/CYJV7 or PVVA/PVVA7)

Further information

- Light source: Average life expectancy 100,000 h at an ambient temperature of 25 °C
- Response time: For short decay times, an ohmic load of approx. 5 kOhm is recommended
- Sum of the output currents for both outputs, 50 mA for ambient temperatures > 40 °C

Accessories

Connection technology - Connection cables

	Part no.	Designation	Article	Description
	50130652	KD U-M12-4A-V1-050	Connection cable	Application: Chemical resistant Connection 1: Connector, M12, Axial, Female, A-coded, 4 -pin Connector, LED: No Connection 2: Open end Shielded: No Cable length: 5,000 mm Sheathing material: PVC
	50130690	KD U-M12-4W-V1-050	Connection cable	Application: Chemical resistant Connection 1: Connector, M12, Angled, Female, A-coded, 4 -pin Connector, LED: No Connection 2: Open end Shielded: No Cable length: 5,000 mm Sheathing material: PVC

Mounting technology - Mounting brackets

	Part no.	Designation	Article	Description
	50060511	BT 3	Mounting device	Design of mounting device: Angle, L-shape Fastening, at system: Through-hole mounting Mounting bracket, at device: Screw type Type of mounting device: Rigid Material: Metal

Mounting technology - Rod mounts

	Part no.	Designation	Article	Description
	50117255	BTU 200M-D12	Mounting system	Contains: 2x M3 x 16 screw, 2 M3 x 20 screws, 2x position washers Design of mounting device: Mounting system Fastening, at system: For 12 mm rod, Sheet-metal mounting Mounting bracket, at device: Screw type, Suited for M3 screws Type of mounting device: Clampable, Adjustable, Turning, 360° Material: Metal

Note
↳ A list with all available accessories can be found on the Leuze website in the Download tab of the article detailed page.