Product Data Sheet

9692300186
VWC0060AUEBS
632/2HPU

ebmpapst
The engineer's choice



GREEN TECH

632/2HPU

INDEX

1 General 3
2 Mechanics 3
2.1 General 3
2.2 Connections 3
3 Operating Data 4
3.1 Electrical Interface - Input 4
3.2 Electrical Operating Data 5
3.3 Electrical Interface - Output 6
3.4 Electrical Features 7
3.5 Aerodynamics 8
3.6 Sound Data 9
4 Environment 9
4.1 General 9
4.2 Climatic Requirements 10
5 Safety 11
5.1 Electrical Safety 11
5.2 Approval Tests 11
6 Reliability 11
6.1 General 11

1 General

Fan type	Fan	
Rotating direction looking at rotor	Clockwise	
Airflow direction	Air outlet over struts	
Bearing system	Stainless steel bearing	
Mounting position - shaft	Any	

2 Mechanics

2.1 General

Width	60,0 mm	
Height	60,0 mm	
Depth	25,4 mm	
Mass	0,070 kg	
Housing material	Plastic	
Impeller material	Plastic	
Max. torque when mounted across both mounting flanges Screw size	Wire outlet corner: 30 Ncm Remaining corners: 70 Ncm ISO 4762 - M4 degreased, without an additional brace and without washer	

2.2 Connections

Electrical connection	Wires	
Lead wire length Tolerance	L = 310 mm +- 10,0 mm	

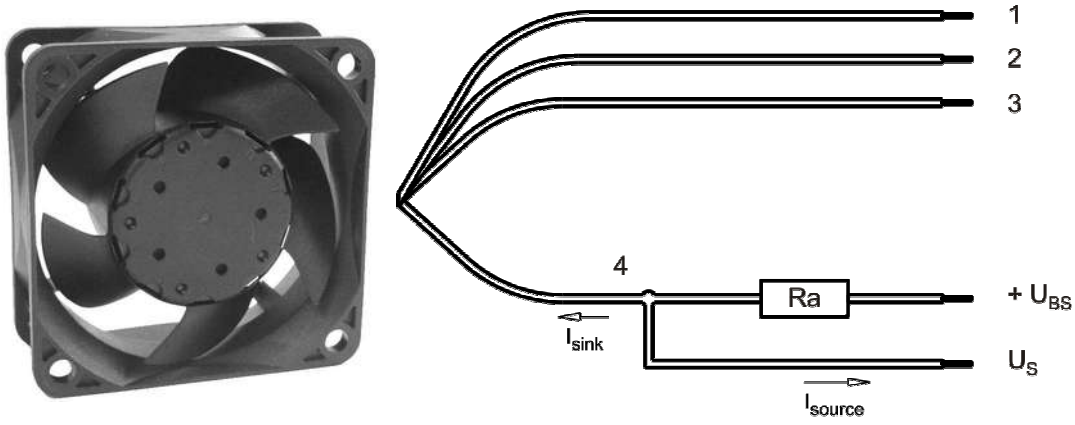

Wire	Color	Operation	Wire size	Insulation diameter
1	red	+ UB	AWG 24	1,10 mm
2	blue	- GND	AWG 24	1,10 mm
3	violet	PWM	AWG 24	1,10 mm
4	white	Tacho		

The auxilliaries shown on the schematic diagram (which are required for the intended use) are not part of our delivery.

3 Operating Data

3.1 Electrical Interface - Input

Control input	PWM

Features

Inpute type	Open collector	
PWM - Frequency		1 kHz - 30 kHz

Characteristics

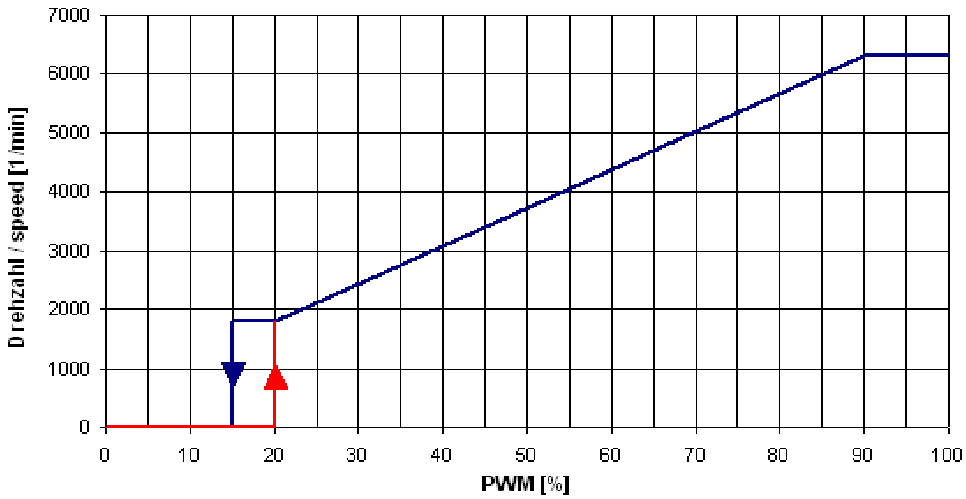

Schematics

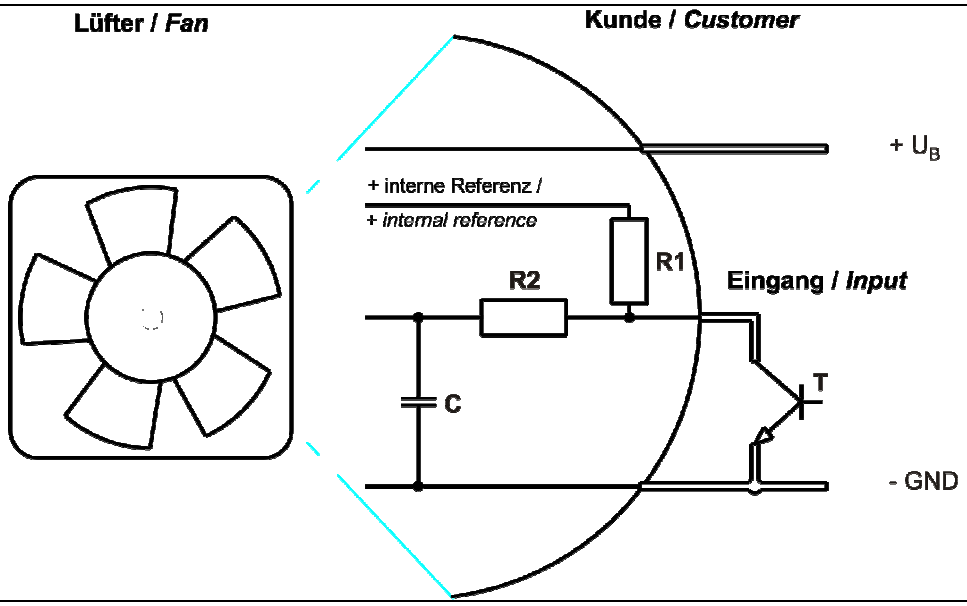

3.2 Electrical Operating Data

Measurement conditions: Normal air density = 1,2 kg/m3; Temperature 23℃ +/ - 3℃; Motor axis horizontal; warm-up time before measuring 5 minutes (unless otherwise specified). In the intake and outlet area should not be any solid obstruction within 0,5 m.

Δp = 0: corresp. to free air flow (see chapter aerodynamics)
I: corresp. to arithm. mean current value

Name	Condition		
PWM 0001	PWM: 100 %;		

Startup peakpulse current: Ipmax = 1.300mA
Startup peakpulse duration: tp = 2 x 500us

Features	Condition	Symbol	Values		
Voltage range		U	10,8 V		13,2 V
Nominal voltage		U_N		12 V	
Power consumption Tolerance	Δp = 0 PWM 0010	P	1,35 W +- 25 %	1,6 W +- 17,5 %	1,5 W +- 17,5 %
Current consumption Tolerance	Δp = 0 PWM 0010	I	125 mA +- 25 %	130 mA +- 17,5 %	115 mA +- 17,5 %
Speed Tolerance	Δp = 0 PWM 0010	n	6.200 1/min +- 12,5 %	6.300 1/min +- 5 %	6.300 1/min +- 5 %
Starting current consumption				<= 520 mA	

****) *Vario Pro:*** Unless otherwise specified in the table a general fan speed tolerance applies, relating to the maximum value of the required characteristic curve. Tolerance:+- 5,0 %

3.3 Electrical Interface - Output

Tacho type	/2 (open collector)

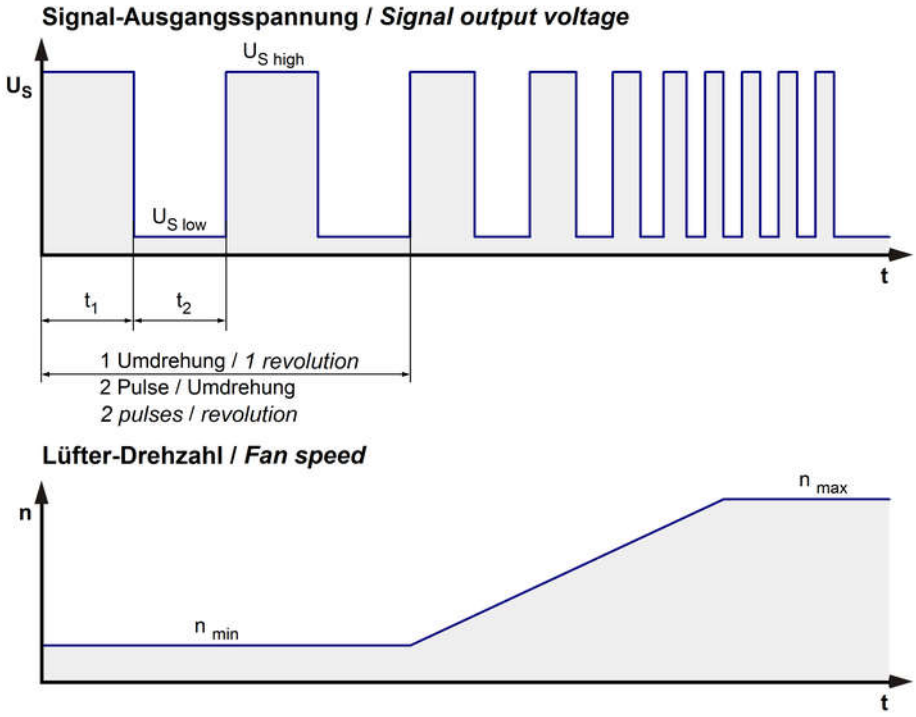

$$Ra = \frac{U_{BS} - U_{S\,low}}{I_{sink}}$$

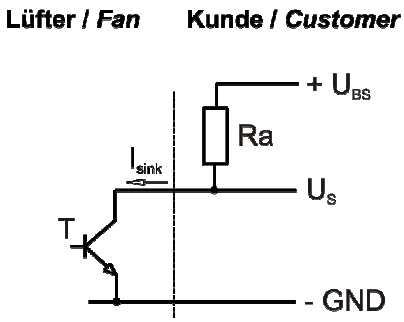

Features		Note	Values
Tacho operating voltage	U_{BS}		<= 60 V
Tacho signal Low	$U_{S\,low}$	I sink: 2 mA	<= 0,4 V
Tacho signal High	$U_{S\,high}$	I source: 0 mA	<=60 V
Maximum sink current	I_{sink}		4 mA
External resistor		External resistor Ra from UBS to US required. All voltages measured to GND.	
Tacho frequency		(2 x n) / 60	210 Hz
Tacho isolated from motor		No	
Slew rate			=> 0,5 V/us

n = revolutions per minute (1/min)

3.4 Electrical Features

Electronic function	Speed-Controlled	
Reversed polarity protection Max. residual current at U_N	Rectifying diode I_F < 1 mA	
Locked rotor protection	Auto restart	
Locked rotor current at U_N	I_{block} approx. 520 mA	
Clock signal at locked rotor	t_3 / t_4 typical: 0,12 s / 20,7 s	

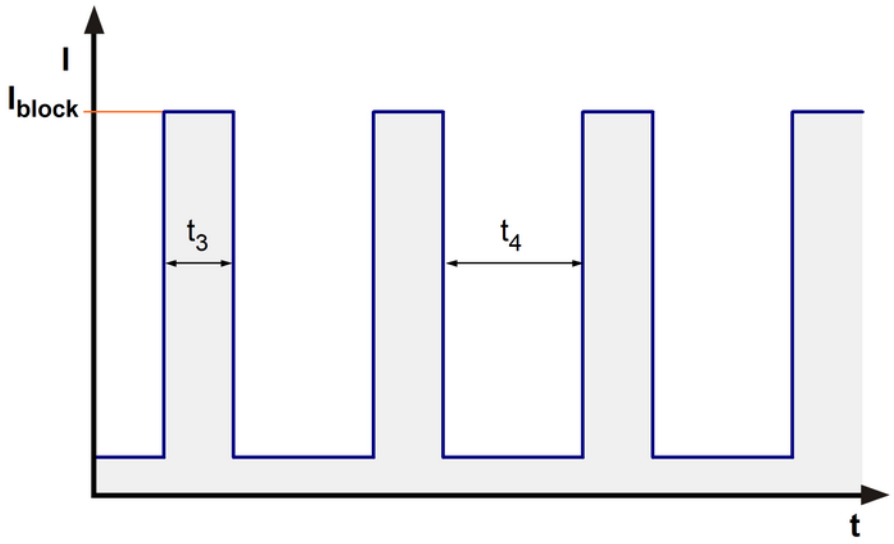

3.5 Aerodynamics

Measurement conditions:	Measured with a double chamber intake rig acc. to DIN EN ISO 5801. Normal air density = 1,2 kg/m3; Temperature 23℃ +/ - 3℃; In the intake and outlet area should not be any solid obstruction within 0,5 m. Motor shaft horizontal. The information is only valid under the specified test conditions and may be changed by the installation conditions. If there are deviations from the standard test conditions, the characteristic values must be checked under the installed conditions.

a.) Operation condition:

6.300 1/min at free air flow	PWM 100 %;		

Max. free-air flow (Δp = 0 / $\dot{V}$ = max.)	44,0 m3/h	
Max. static pressure (Δp = max. / $\dot{V}$ =0)	125 Pa	

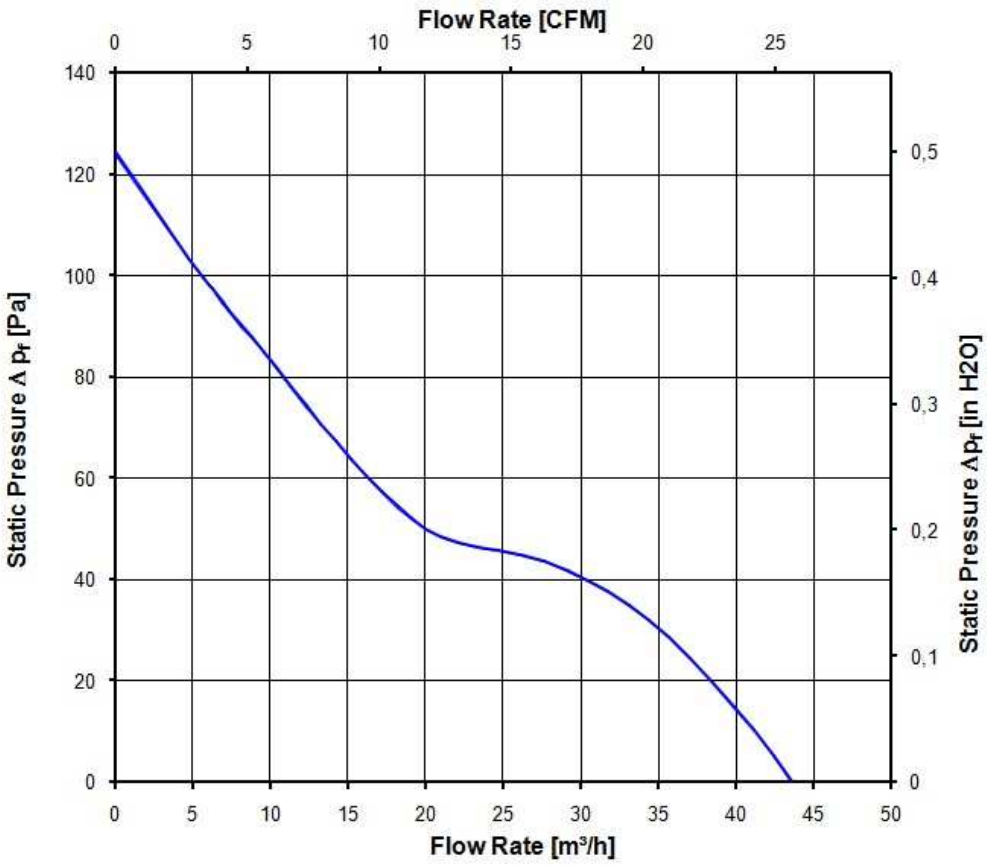

3.6 Sound Data

Measurement conditions:	Sound pressure level: 1 meter distance between microphone and the air intake. Sound power level: Acc. to DIN 45635 part 38 (ISO 10302) Measured in a semianchoic chamber with a background noise level of Lp(A) < 5 dB(A) For further measurement conditions see chapter aerodynamics.

a.) Operation condition:

6.300 1/min at free air flow	PWM 100 %;		

Optimal operating point	41,0 m3/h @ 10 Pa	
Sound power level at the optimal operating point	5,4 bel(A)	
Sound pressure level at free air flow, measured in rubber bands	35,0 dB(A)	

4 Environment

4.1 General

Min. permitted ambient temperature TU min.	-20 ℃	
Max. permitted ambient temperature TU max.	70 ℃	
Min. permitted storage temperature TL min.	-40 ℃	
Max. permitted storage temperature TL max.	80 ℃	

4.2 Climatic Requirements

IP-protection type (certified)	IP 68 (for fan only, not for connector if applicable) **)	
Humidity requirements	humid temperature, cyclic; according to DIN EN 60068-2-38, 10 cycle and condensation water check; according to DIN EN ISO 6270-2, 14 days	
Salt fog requirements	Salt fog, constant, (Bellcore II); according to DIN EN 60068-2-22, 30 days, operation at nominal speed	

Permitted application area:
The product is for the use in open and unsheltered areas. Direct exposure to water as well as saline ambient conditions are allowed provided that this does not prevent the normal operation.

Pollution degree 4 (according DIN EN 60664-1)
It occurs permanent conductivity caused by conductive dust, rain or moisture.

**) The specification of the IP protection refers to the conditions mentioned in certification of the fan. The above mentioned short description of the protection scope is not final. For detailed information of the respective protection scope and definitions, see certification as well as DIN EN 60529 (protection by housings) and ISO 20653 (for vehicles) with the letter K.

Short description of the IP-protection type:
Solid particle Protection: Dust tight.
Protection against deliberate contact: Protected against contact to hazardous parts with a wire.
Protection against water: The fan test according to IP68 (Based on IEC 60529), is conducted in non-operating mode. The fan is tested by a complete immersion in water for a period of 2h at a water-level of 1,2m. Electrical connections are not immersed since they are customer specific.

Please require severity levels and specification parameters from the responsible development departments.

5 Safety

5.1 Electrical Safety

Dielectric strength DIN EN 60950 (VDE 0805) and DIN EN 60335 (VDE 0700) A.) Type test Measuring conditions: After 48h of storage at 95% R.H. and 25℃. No arcing or breakdown is allowed! All connections together to ground. B.) Routine test Measuring conditions: At indoor climate. No arcing or breakdown is allowed! All connections together to ground.	500 VAC / 1 Min. 850 VDC / 1 Sec.	
Isolation resistance Measuring conditions: After 48h of storage at 95% R.H. and 25℃ measured with U=500 VDC for 1 min.	RI > 10 MOhm	
Clearance / creepage distance	1,0 mm / 1,2 mm	
Protection class	III	

5.2 Approval Tests

CE	EC Declaration of Conformity	Yes
EAC	Eurasian Conformity	Yes
UL	Underwriters Laboratories	Yes / UL507, Electric Fans E38324
VDE	Association for Electrical, Electronic and Information Technologies	Yes / Approval acc. to EN 60950 (VDE 0805) - Information technology equipment
CSA	Canadian Standards Association	Yes / C22.2 No. 113 Fans and Ventilators
CCC	China Compulsory Certification	Not applicable

6 Reliability

6.1 General

Life expectancy L10 at TU = 40 ℃	85.000 h	
Life expectancy L10 at TU max.	42.500 h	
Life expectancy L10 acc. to IPC 9591 at TU = 40 ℃	142. 500 h	

Copying of this document, and giving it others and the use or communication of the contents thereof, are forbidden without express authority. Offenders are liable to the payment of damages. All rights are reserved in the event of the grant of a patent or the registration of a utility model or design.

Schutzvermerk nach DIN ISO 16016 beachten !
Refer to protection notice DIN ISO 16016 !

Anzahl und Länge der Litzen siehe BV - Blatt 1
length and number of wires see design specifikation page 1

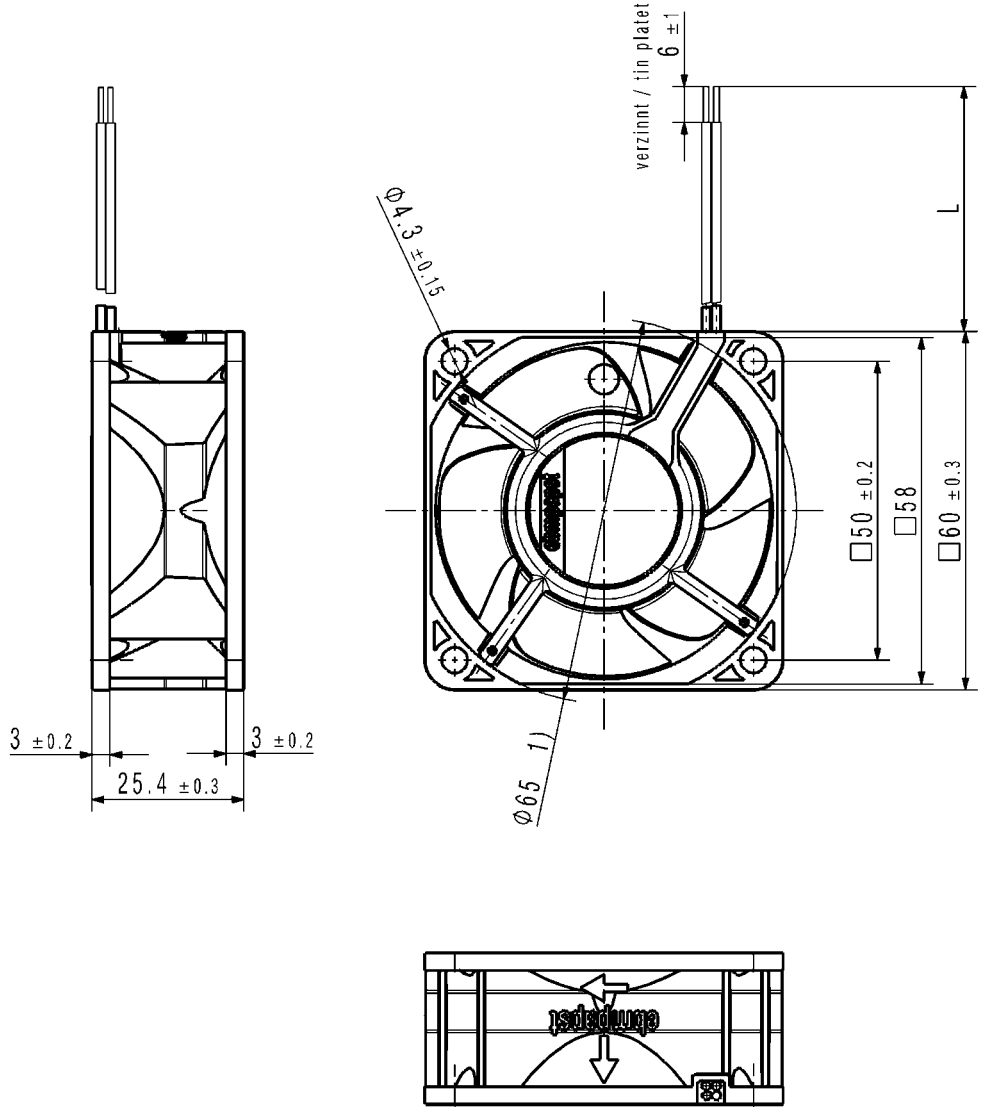

1) Maße fuer Montagewand / measures for mounting plate
Axialspiel bei Kugellagerung (K): 0 (mit Federausgleich) /
by ballbearing (K): 0 (by pre-loaded spring)

SAP-Status/State	Aend.-Nr./ Change-No.	CATIA-System-Version/ CATIA-System-Version	CAD-Umgebung/ CAD-Environment	Werkstoff / Material:	Volumen / Volume (mm^3):
					Gewicht / Mass (g):
		9292308001 CPR000 -		Artikel / Title:	
		3D-Referenzmodell / 3D-Referencemodel			
Tolerierung / Tolerances:		Datum	Name		
	Bearb./ Drawn				
Allgemeintoleranzen / Gen. Tolerances:	Gepr./ Checked			Zchg.-Nr./ Drawing No:	Ers.f.Zchg. / Replaces:
	Freig./ Releas.				

ebmpapst
ebm-papst St.Georgen GmbH & Co KG

Dokumenttyp / Type of Document	Teildokument (Blatt/Page)	Index / Index	Format / Size:	Massstab/Scale