

Illuminated pushbutton actuators, Flat Front, flush, momentary, white, blank

Part no. M30C-FDL-W
Catalog No. 182925
Eaton Catalog No. M30C-FDL-W

Delivery program

Product range			RMQ-Titan
Basic function			Illuminated pushbutton actuators
Single unit/Complete unit			Single unit
Design			Flat
			momentary
Button plate			
button plate			White
Button plate			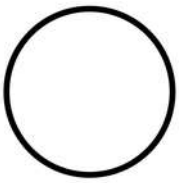
			Blank
Degree of Protection			IP67, IP69K
Front ring			Metal bezel
Connection to SmartWire-DT			Yes, with SWD-RMQ connections
Actuator travel and actuation force as per DIN EN 60947-5-1, K.5.4.1			
Minimum force for positive opening	N		0
Front dimensions			Ø 36 mm

Technical data

General

Standards			IEC/EN 60947 VDE 0660
Lifespan, mechanical	Operations	x 10^6	> 5
Operating frequency	Operations/h		3600
Actuating force		n	5
Climatic proofing			Damp heat, constant, to IEC 60068-2-78 Damp heat, cyclic, to IEC 60068-2-30
Degree of Protection			IP67, IP69K
Ambient temperature			
Open		°C	-25 - +70
Mounting position			As required
Mechanical shock resistance		g	15 Shock duration 11 ms Sinusoidal according to IEC 60068-2-27

Design verification as per IEC/EN 61439

Technical data for design verification			
Operating ambient temperature min.		°C	-25
Operating ambient temperature max.		°C	70

Technical data ETIM 6.0

Low-voltage industrial components (EG000017) / Front element for push button (EC000221)

Electric engineering, automation, process control engineering / Low-voltage switch technology / Command and alarm device / Front element for push-button actuators (ecl@ss8.1-27-37-12-10 [AKF028011])

Colour button		White
Number of command positions		1
Construction type lens		Round
Hole diameter	mm	30
Width opening	mm	0
Height meter opening	mm	0
Degree of protection (IP), front side		IP67
Type of button		Flat
Suitable for illumination		Yes
With protection cover		No
Labelled		No
Switching function latching		No
Spring-return		Yes
With front ring		Yes
Material front ring		Metal
Colour front ring		Chrome

Dimensions

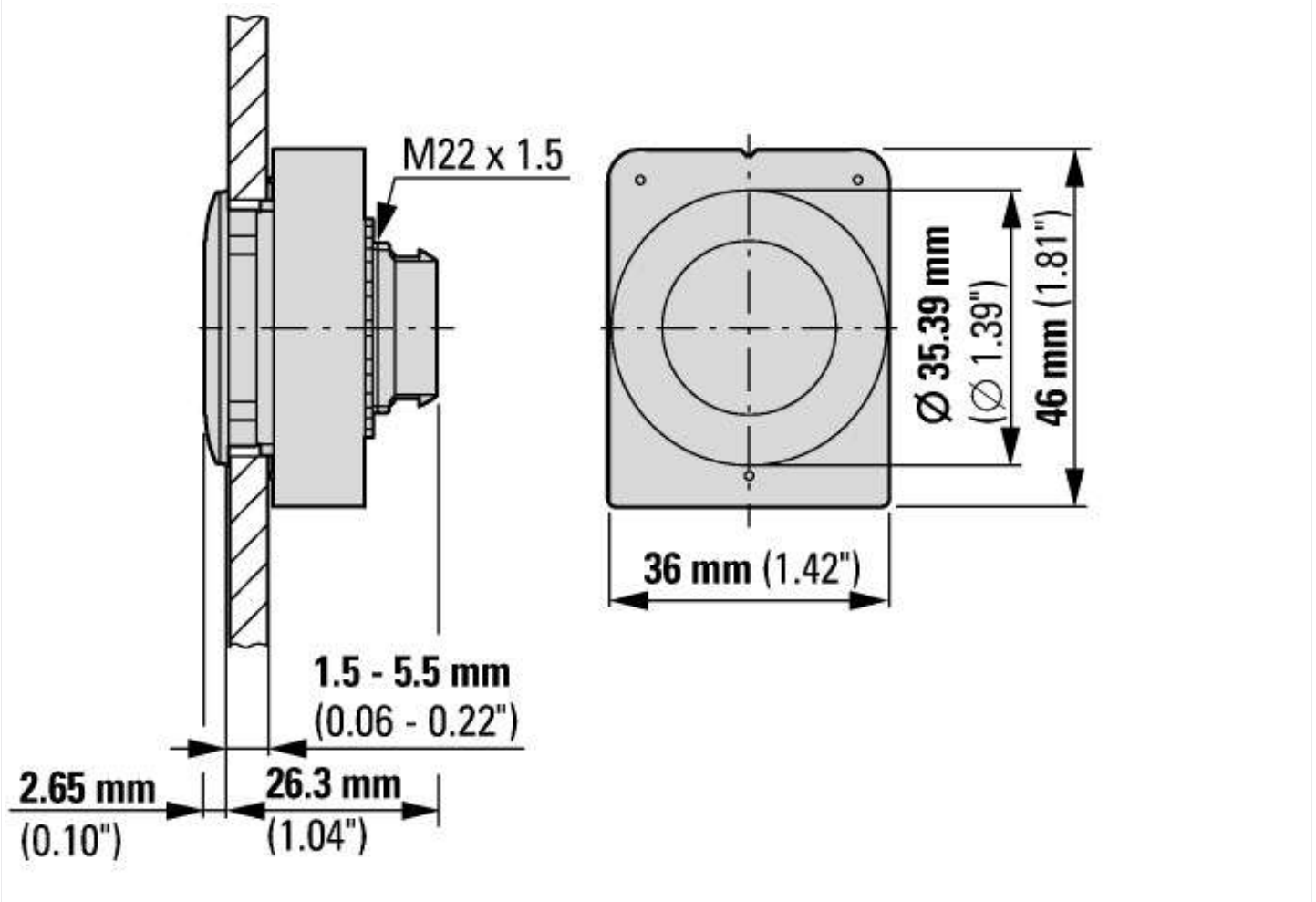

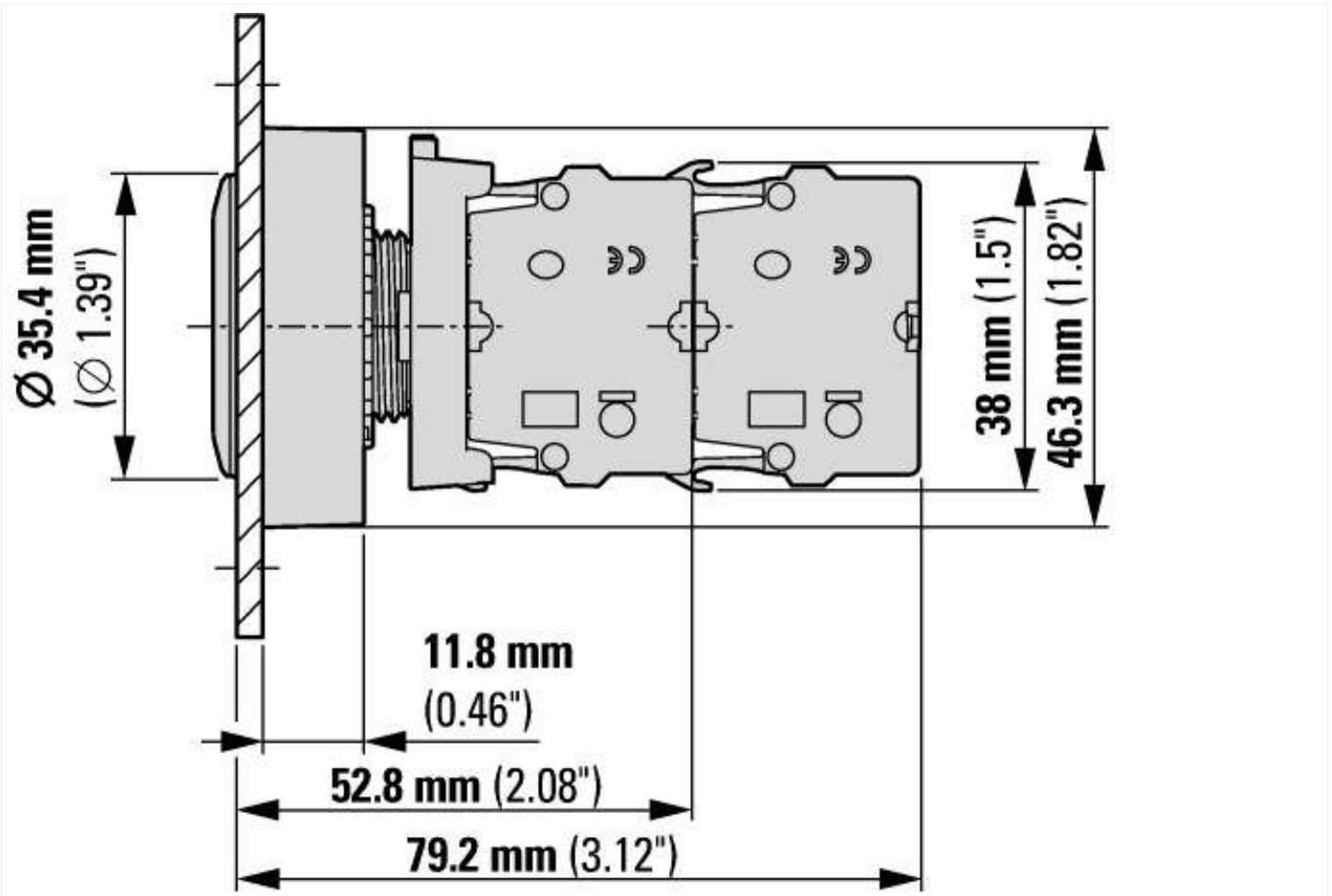

with 2 M22-K… standard contact elements

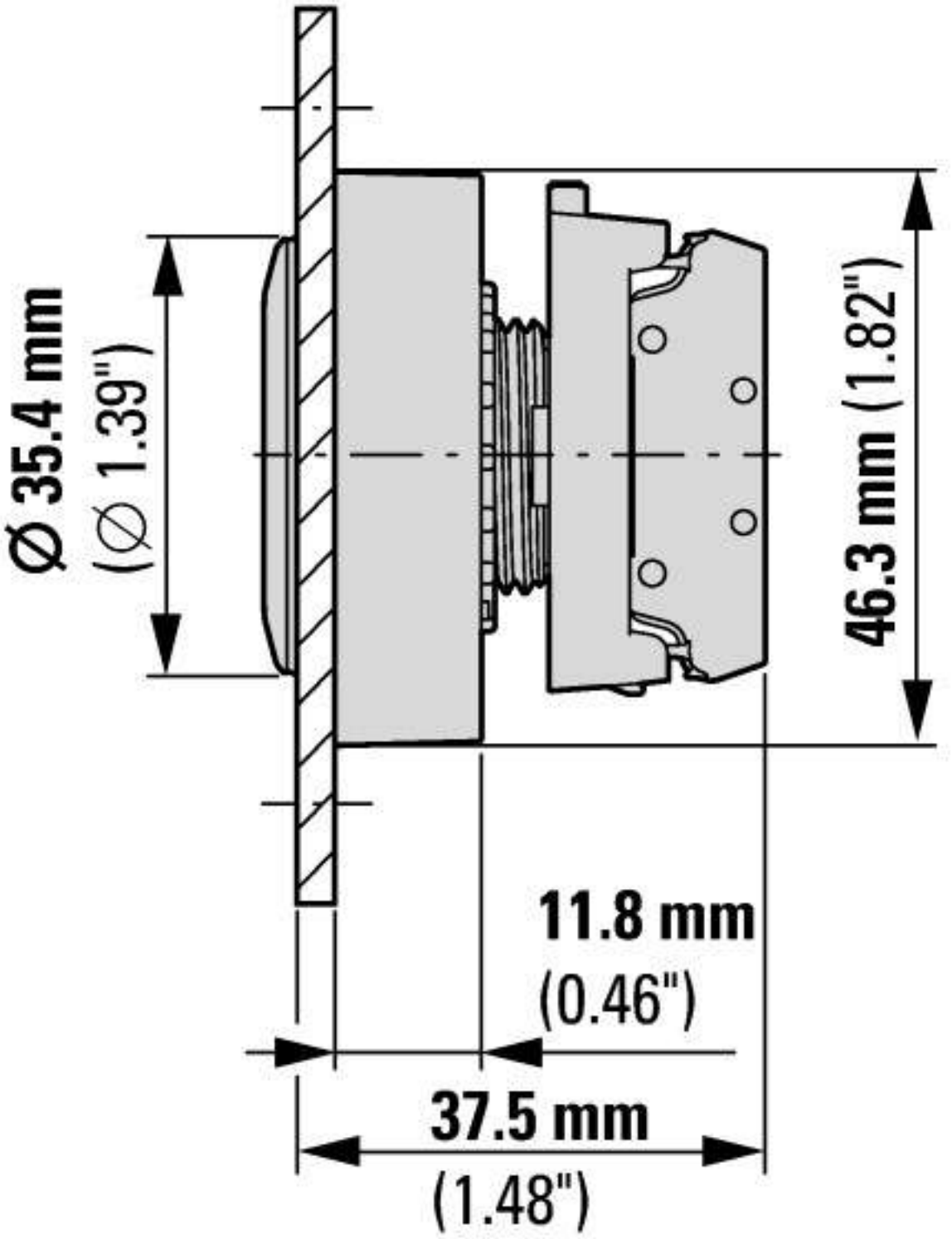

with M22-FK… flat rear contact elements

Additional product information (links)

IL047019ZU Flat Front	
IL047019ZU Flat Front	ftp://ftp.moeller.net/DOCUMENTATION/AWA_INSTRUCTIONS/IL047019ZU2017_02.pdf

© 07/2017 by Eaton Industries GmbH