SCHAEFFLER

Angular contact ball bearings

3005-B-2RZ-TVH (Series 30..-B-2RZ)

Double row design, non-contact radial seals on both sides, contact angle α = 25°

The datasheet is only an overview of dimensions and basic load ratings of the selected product. Please always observe all the guidelines in these overview pages. Further information is given on many products under the menu item "Description". You can also order comprehensive information via the Catalogue selection system (https://www.schaeffler.de/content.schaeffler.de/en/news_media/index.jsp) or by telephone on +49 (91 32) 82 - 28 97.

d	25	mm	
D	47	mm	
B	16	mm	
a	23,4	mm	
D_2	41,8	mm	
d_2	30,3	mm	
$D_{a\ max}$	43,8	mm	
$d_{a\ min}$	28,2	mm	
$r_{a\ max}$	0,6	mm	
r_{min}	0,6	mm	
α	25	°	Contact angle

m	0,1 kg	Mass
C_r	15200 N	Basic dynamic load rating, radial
C_{0r}	10900 N	Basic static load rating, radial
C_{ur}	570 N	Fatigue limit load, radial
n_G	11900 1/min	Limiting speed
$n_{\vartheta r}$	11100 1/min	Reference speed

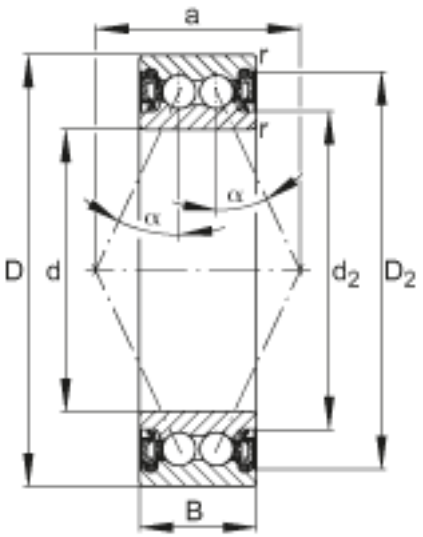

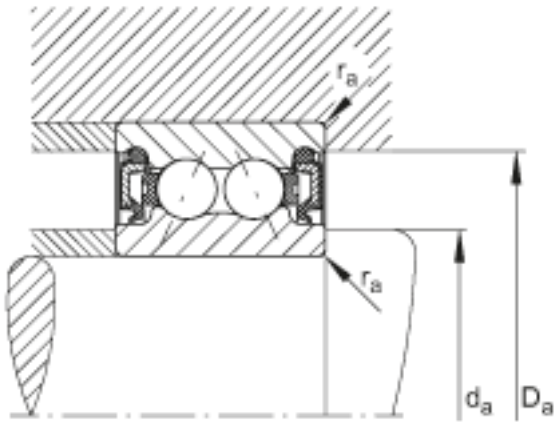
r_a
r_a
d_a
D_a