1400N series

Momentary pushbutton switches - snap-in mounting - square plunger

Distinctive features and specifications

UG1410A



- **Butt action contacts, double break**
- **Solder lug, straight PC and quick-connect terminals**

B2

ELECTRICAL SPECIFICATIONS

- Max. current/voltage rating with resistive load :
  - silver contacts (A) : 6A 12VDC
  - silver plated copper contacts (C) : 3A 12VDC
- Initial contact resistance : 10 mΩ
- Insulation resistance : 1.000 MΩ min. at 500VDC
- Dielectric strength :
  1.500 Vrms 50 Hz min. between terminals
  2.000 Vrms 50 Hz min. between terminals and metal panel
- Electrical life : 10.000 cycles at full load

MATERIALS

- Case : polyamide
- Plunger : polyamide
- Contacts :
  A : silver
  C : copper, silver plated

GENERAL SPECIFICATIONS

- Panel thickness : 2 mm (.078) max.
- Operating temperature : -20°C to +55°C

Dimensions : first dimensions are in mm while inches are shown as bracketed numbers.

Packaging unit : 60 pieces.

The company reserves the right to change specifications without notice.

MODEL STRUCTURE

1400N series

Momentary pushbutton switches - snap-in mounting - square plunger

Solder lug, straight PC or quick-connect terminals

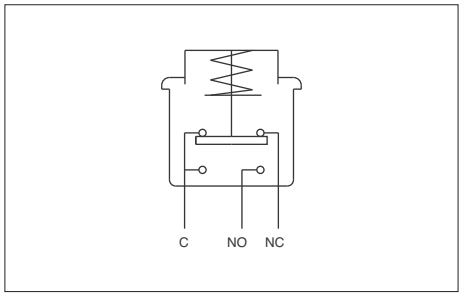

- Single pole configurations

141.N

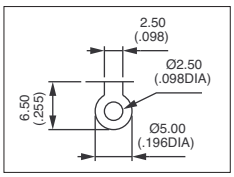

144.N

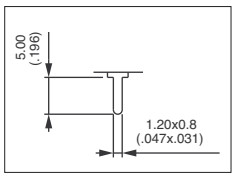

141.N/8

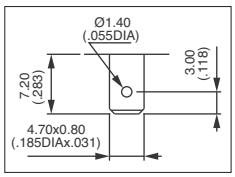

MODEL STRUCTURE

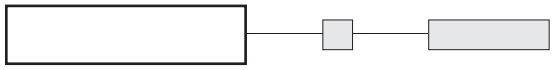

B2

Solder lug terminals



1412N		Normally Closed
1413N		Normally Open
1415N		Changeover

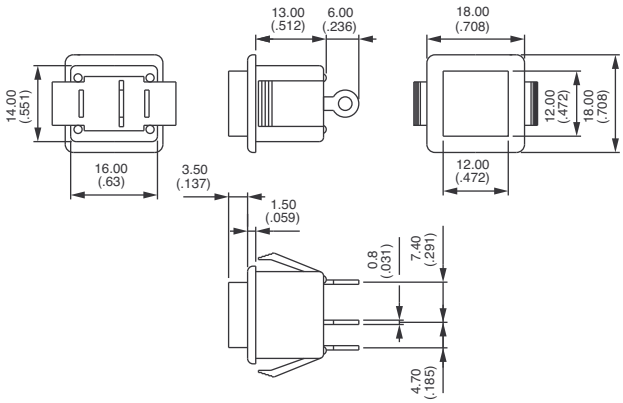

Straight PC terminals



1442N		Normally Closed
1443N		Normally Open
1445N		Changeover

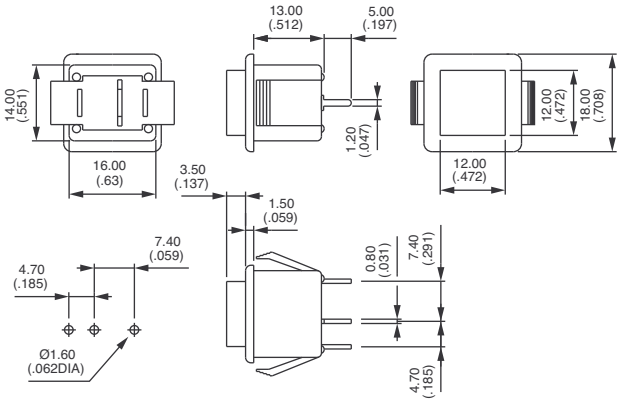

Quick-connect terminals 4,7 x 0,8 (.185 x .031)



1412N/8		Normally Closed
1413N/8		Normally Open
1415N/8		Changeover

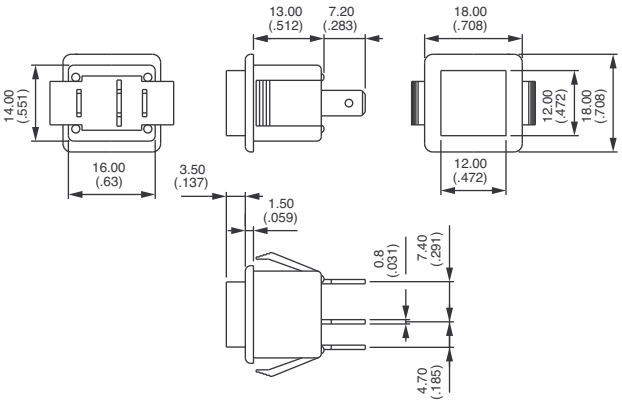

1400N series

Momentary pushbutton switches - snap-in mounting - square plunger

OPTIONS

PANEL CUT-OUT

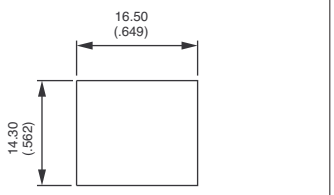

B2

CONTACT MATERIALS

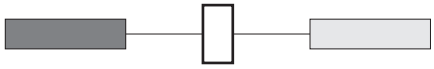

A	Silver
C	Copper, silver plated

PLUNGER COLOURS

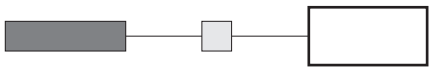

2	Black (standard)
3	Green
6	Red
7	Ivory

Switch frame supplied in black.