Brand of NTN corporation

Technical data

S6200EEFD

Single row deep groove ball bearings



Stainless steel deep groove ball bearing, with pressed stainless steel cage, seals with stainless steel frame on both sides, food grease lubrication.

VISUAL (S)

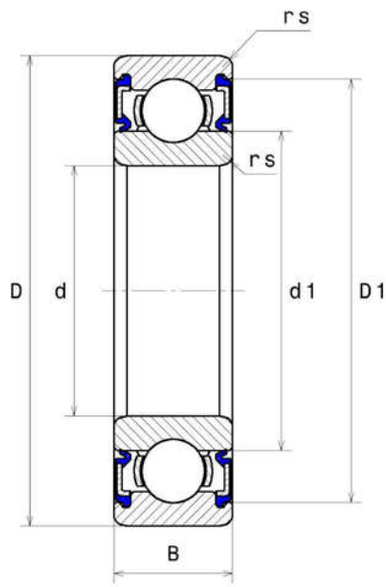

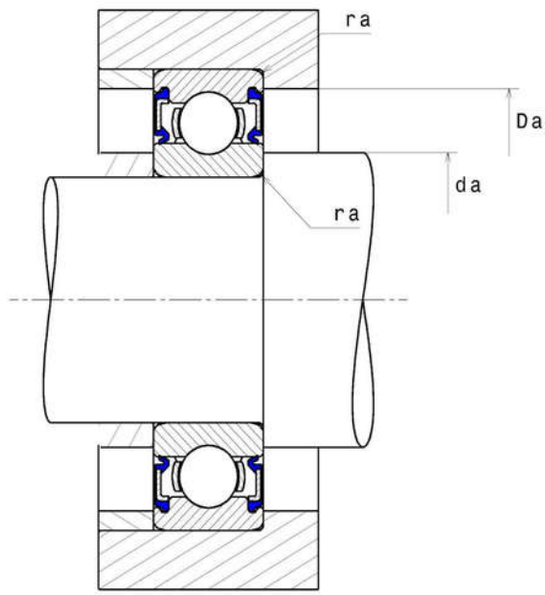

NTN Europe
1 rue des Usines · BP 2017 · 74010 Annecy Cedex · France · Tel. +33 (0)4 50 65 30 00
S.A. au capital de 322 639 919 € · RCS ANNECY B 325 821 072 · Id. Fiscale : FR 48 325 821 072
SIRET 325 821 072 00015 · Code APE 2815 Z · Code NACE 28.15

S6200EEFD
Single row deep groove ball bearings

PRODUCT DEFINITION	
Brand	SNR
d - Internal diameter	10 mm
D - External diameter	30 mm
B - Bearing/Inner ring width	9 mm
d1 - External diameter inner ring	17,4 mm
D1 - Inner diameter outer ring	25,1 mm
rs - Min fillet radius	0,6 mm
Radial clearance class	CN
Mass	0,032 kg

PRODUCT PERFORMANCE	
C - Dynamic load	3,93 kN
C0 - Static load	2,39 kN
Cu - Fatigue limit load	0,11 kN
f0 - Coefficient	13.15
Nlim - Mechanical Limit Speed	17000 tr/min
Tmin - Min operating temperature	-30 °C
Tmax - Max operating temperature	120 °C

BEARING FREQUENCIES	
BPFO - Characteristic outer ring frequency (60 rpm)	3.071 Hz
BPFI - Characteristic inner ring frequency (60 rpm)	4.929 Hz
FTF - Characteristic cage frequency (60 rpm)	0.384 Hz
BSF - Characteristic rolling element frequency (60 rpm)	4.072 Hz

S6200EEFD
Single row deep groove ball bearings

ABUTMENT

da min - Min shoulder diameter IR	14 mm
da max - Max shoulder diameter IR	17,4 mm
Da max - Max shoulder diameter OR	26 mm
ra max - Max shaft & housing fillet radius	0,6 mm

INDUSTRY CALCUL FACTORS

Equivalent dynamic radial load

P = X.Fr + Y.Fa

$\frac{f_0 F_a}{C_0}$	e	Fa / Fr ≤ e		Fa / Fr > e	
		X	Y	X	Y
0.172	0.19	1	0	0.56	2.3
0.345	0.22				1.99
0.689	0.26				1.71
1.03	0.28				1.55
1.38	0.3				1.45
2.07	0.34				1.31
3.45	0.38				1.15
5.17	0.42				1.04
6.89	0.44				1

Equivalent static radial load

Po = Xo.Fr + Yo.Fa

X_0	Y_0
0.6	0.5

For single or DT bearing arrangement :

If Po <Fr, then use Po = Fr