60 series, 2/2 or 3/2 Ball valve



- Port size: Rp1/8 ... 2, G1/8 ... 1
- Ideally suited for most general purpose applications
- Easy installation, simple operation and maintenance free
- Full bore passage giving minimum flow resistance
- 3-way ball valves with actuator interface conforming to ISO 5211 for rotary actuators
- Wide pressure and temperature range

Technical features

Medium:
Compressed air, water, inert gases and any other fluid compatible with the valve materials

Port size:
Mini G1/8 ... 1/2
Standard Rp1/8 ... 2
3-way Rp1/4 ... 3/4
Exhausting Rp1/4 ... 1 1/2
Lockable G1/4 ... 1
Heavy duty Rp1/4 ... 1

Operating pressure:
See individual details

Ambient/Media temperature:
-20 ... +200°C (-4 ... +392°F)
see table on page 2
Air supply must be dry enough to avoid ice formation at temperatures below +2°C (+35°F).

Materials:
Body, seats and seals:
see table on page 2
Handle with PVC grip:
zinc plated steel
(plastic handle on mini ball range)

Our policy is one of continued research and development. We therefore reserve the right to amend, without notice, the specifications given in this document. (2003 - 5208h) © 2024 Norgren Ltd.

Technical data

Symbol	Port size	Series #	Type	Material Body/Body finish	Seats/seals	Operating pressure (bar)	Tempera-ture (°C)	Thread standard	Drawing No.	Model
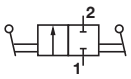	G1/8	6011	Mini	Brass/Nickel plated	PTFE (virgin)/NBR	-0,4 ... 10	-10 ... +90	ISO 228/1	1	601112118
	G1/4	6011	Mini	Brass/Nickel plated	PTFE (virgin)/NBR	-0,4 ... 10	-10 ... +90	ISO 228/1	1	601112128
	G3/8	6011	Mini	Brass/Nickel plated	PTFE (virgin)/NBR	-0,4 ... 10	-10 ... +90	ISO 228/1	1	601112138
	G1/2	6011	Mini	Brass/Nickel plated	PTFE (virgin)/NBR	-0,4 ... 10	-10 ... +90	ISO 228/1	1	601112148
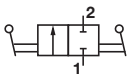	G1/8	6011	Mini *1)	Brass/Nickel plated	PTFE (virgin)/NBR	-0,4 ... 10	-10 ... +90	ISO 228/1	2	601112218
	G1/4	6011	Mini *1)	Brass/Nickel plated	PTFE (virgin)/NBR	-0,4 ... 10	-10 ... +90	ISO 228/1	2	601112228
	G3/8	6011	Mini *1)	Brass/Nickel plated	PTFE (virgin)/NBR	-0,4 ... 10	-10 ... +90	ISO 228/1	2	601112238
	G1/2	6011	Mini *1)	Brass/Nickel plated	PTFE (virgin)/NBR	-0,4 ... 10	-10 ... +90	ISO 228/1	2	601112248
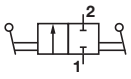	Rp1/4	6021	Standard	Brass/Nickel plated	PTFE (virgin)/ EPDM + HNBR	-0,4 ... 40	-15 ... +90	ISO 7/1	3	602112128
	Rp3/8	6021	Standard	Brass/Nickel plated	PTFE (virgin)/NBR	-0,4 ... 40	-20 ... +60	ISO 7/1	3	602112138
	Rp1/2	6021	Standard	Brass/Nickel plated	PTFE (virgin)/ EPDM + HNBR	-0,4 ... 40	-15 ... +90	ISO 7/1	3	602112148
	Rp3/4	6021	Standard	Brass/Nickel plated	PTFE (virgin)/ EPDM + HNBR	-0,4 ... 40	-15 ... +90	ISO 7/1	3	602112168
	Rp1	6021	Standard	Brass/Nickel plated	PTFE (virgin)/ EPDM + HNBR	-0,4 ... 40	-15 ... +90	ISO 7/1	3	602112188
	Rp1 1/4	6021	Standard	Brass/Nickel plated	PTFE (virgin)/ EPDM + HNBR	-0,4 ... 40	-15 ... +90	ISO 7/1	3	6021121A8
	Rp1 1/2	6021	Standard	Brass/Nickel plated	PTFE (virgin)/ EPDM + HNBR	-0,4 ... 40	-15 ... +90	ISO 7/1	3	6021121B8
	Rp2	6021	Standard	Brass/Nickel plated	PTFE (virgin)/ EPDM + HNBR	-0,4 ... 40	-15 ... +90	ISO 7/1	3	6021121C8
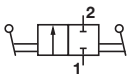	Rp1/4 (R)	6021	Standard *1)	Brass/Nickel plated	PTFE (virgin)/ EPDM + HNBR	-0,4 ... 40	-15 ... +90	ISO 7/1	4	602112228
	Rp3/8 (R)	6021	Standard *1)	Brass/Nickel plated	PTFE (virgin)/NBR	-0,4 ... 40	-20 ... +60	ISO 7/1	4	602112238
	Rp1/2 (R)	6021	Standard *1)	Brass/Nickel plated	PTFE (virgin)/ EPDM + HNBR	-0,4 ... 40	-15 ... +90	ISO 7/1	4	602112248
	Rp3/4 (R)	6021	Standard *1)	Brass/Nickel plated	PTFE (virgin)/ EPDM + HNBR	-0,4 ... 40	-15 ... +90	ISO 7/1	4	602112268
	Rp1 (R)	6021	Standard *1)	Brass/Nickel plated	PTFE (virgin)/ EPDM + HNBR	-0,4 ... 40	-15 ... +90	ISO 7/1	4	602112288
	Rp1 1/4 (R)	6021	Standard *1)	Brass/Nickel plated	PTFE (virgin)/ EPDM + HNBR	-0,4 ... 40	-15 ... +90	ISO 7/1	4	6021122A8
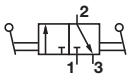	Rp1/4	6021	Three way	Brass/Nickel plated	PTFE/PTFE FKM	0 ... 25	-15 ... +120	ISO 7/1	5	602114428
	Rp3/8	6021	Three way	Brass/Nickel plated	PTFE/PTFE FKM	0 ... 25	-15 ... +120	ISO 7/1	5	602114438
	Rp1/2	6021	Three way	Brass/Nickel plated	PTFE/PTFE FKM	0 ... 25	-15 ... +120	ISO 7/1	5	602114448
	Rp3/4	6021	Three way	Brass/Nickel plated	PTFE/PTFE FKM	0 ... 16	-15 ... +120	ISO 7/1	5	602114468
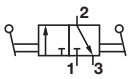	Rp1/4	6021	Exhausting	Brass/Nickel plated	PTFE (virgin)/PTFE	0,5 ... 12	0 ... +60	ISO 7/1	6	602113128EX
	Rp3/8	6021	Exhausting	Brass/Nickel plated	PTFE (virgin)/PTFE	0,5 ... 12	0 ... +60	ISO 7/1	6	602113138EX
	Rp1/2	6021	Exhausting	Brass/Nickel plated	PTFE (virgin)/PTFE	0,5 ... 12	0 ... +60	ISO 7/1	6	602113148EX
	Rp3/4	6021	Exhausting	Brass/Nickel plated	PTFE (virgin)/PTFE	0,5 ... 12	0 ... +60	ISO 7/1	6	602113168EX
	Rp1	6021	Exhausting	Brass/Nickel plated	PTFE (virgin)/PTFE	0,5 ... 12	0 ... +60	ISO 7/1	6	602113188EX
	Rp1 1/2	6021	Exhausting	Brass/Nickel plated	PTFE (virgin)/PTFE	0,5 ... 12	0 ... +60	ISO 7/1	6	6021131B8EX
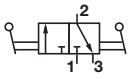	G1/4	6018	Lockable exhausting	Brass/Nickel plated	PTFE glass filled/PTFE carbon filled	0 ... 14	-10 ... +100	ISO 228/1	7	601812128
	G3/8	6018	Lockable exhausting	Brass/Nickel plated	PTFE glass filled/PTFE carbon filled	0 ... 14	-10 ... +100	ISO 228/1	7	601812138
	G1/2	6018	Lockable exhausting	Brass/Nickel plated	PTFE glass filled/PTFE carbon filled	0 ... 14	-10 ... +100	ISO 228/1	7	601812148
	G3/4	6018	Lockable exhausting	Brass/Nickel plated	PTFE glass filled/PTFE carbon filled	0 ... 14	-10 ... +100	ISO 228/1	7	601812168
	G1	6018	Lockable exhausting	Brass/Nickel plated	PTFE glass filled/PTFE carbon filled	0 ... 14	-10 ... +100	ISO 228/1	7	601812188
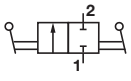	Rp1/4	6051	Heavy Duty	Carbon steel/Zinc plated	PTFE + Carbographite	0 ... 160	-20 ... +200	ISO 7/1	8	605112128
	Rp3/8	6051	Heavy Duty	Carbon steel/Zinc plated	PTFE + Carbographite	0 ... 160	-20 ... +200	ISO 7/1	8	605112138
	Rp1/2	6051	Heavy Duty	Carbon steel/Zinc plated	PTFE + Carbographite	0 ... 160	-20 ... +200	ISO 7/1	8	605112148
	Rp3/4	6051	Heavy Duty	Carbon steel/Zinc plated	PTFE + Carbographite	0 ... 160	-20 ... +200	ISO 7/1	8	605112168
	Rp1	6051	Heavy Duty	Carbon steel/Zinc plated	PTFE + Carbographite	0 ... 160	-20 ... +200	ISO 7/1	8	605112188

Typical applications
6011: Light duty in-line brass ball valves suitable for a wide variety of low pressure industrial uses.
6018: Medium duty in-line brass exhausting ball valves. Venting action & lockout design adds safety feature to valve.
6021: Medium duty in-line brass ball valves for most applications. Available as a standard valve, a three way diverting valve or with a downstream exhaust option.
6051: Heavy duty ball valve, two piece construction
*1) Male/female thread

Our policy is one of continued research and development. We therefore reserve the right to amend, without notice, the specifications given in this document. (2003 - 5208h) © 2024 Norgren Ltd.

Drawings
6011 series, mini ball

Dimensions in mm
Projection/First angle

1

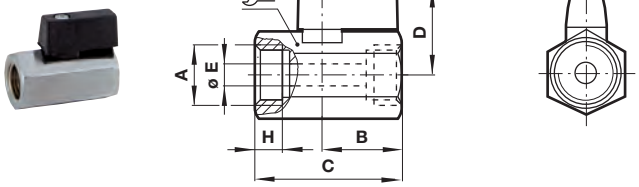

2

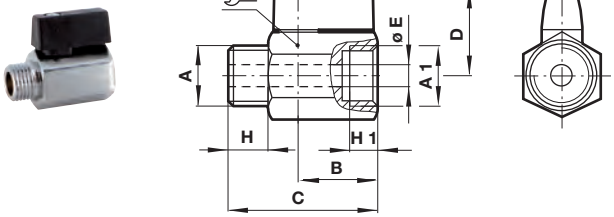

Reduced bore, female/female

A	B	C	D	ø E	G	H	⌀	Weight (kg)	Model
G1/8	18	36	22	5,5	19	9	19	0,08	601112118
G1/4	18	36	22	5,5	19	9	19	0,07	601112128
G3/8	21	41	24	8	19	9	21	0,09	601112138
G1/2	25	48	30	10	22	10	25	0,14	601112148

Reduced bore, male/female

A	A1	B	C	D	ø E	G	H	H1	⌀	Weight (kg)	Model
G1/8	G1/8	20	37	22	5,5	19	9	9	19	0,6	601112218
G1/4	G1/4	20	37	22	5,5	19	9	9	19	0,6	601112228
G3/8	G3/8	21	41	24	8	19	9	9	21	0,8	601112238
G1/2	G1/2	25	48	30	10	22	11	11	25	0,13	601112248

6021 series, Standard ball valves

3



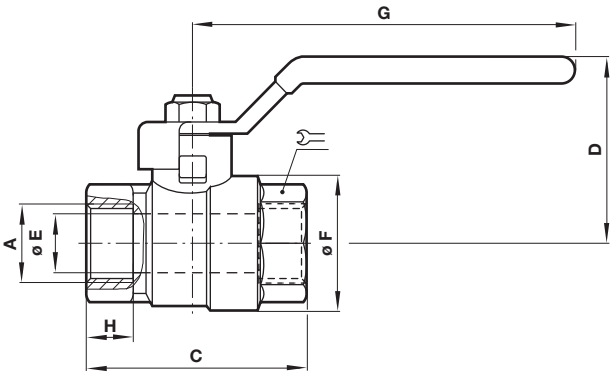

Full bore, female/female

A	C	D	ø E	ø F	Rp	H	⌀	Weight (kg)	Model
Rp1/4	48	36	8	23	85	12	18	0,13	602112128
Rp3/8	49	36	10	24	85	12	21	0,15	602112138
Rp1/2	60	40	15	30	85	15	25	0,20	602112148
Rp3/4	69	47	20	38	105	16,3	31	0,34	602112168
Rp1	83	51	25	46	105	19,1	38	0,47	602112188
Rp1 1/4	96	63	32	58	130	21,4	47	0,80	6021121A8
Rp1 1/2	106	69	40	70	130	22	54	1,14	6021121B8
Rp2	129	83	50	86	165	25,7	66	2,03	6021121C8

Pressure/temperature diagram

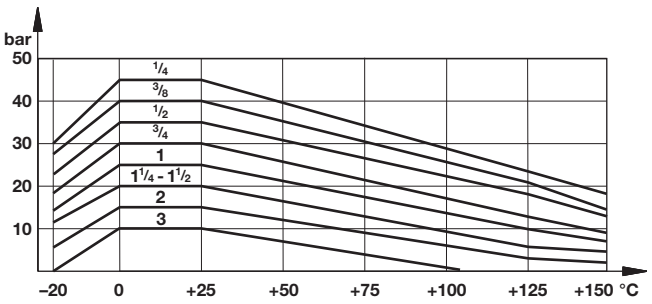

Our policy is one of continued research and development. We therefore reserve the right to amend, without notice, the specifications given in this document. (2003 - 5208h) © 2024 Norgren Ltd.

6021 series, Standard ball valves

Dimensions in mm
Projection/First angle

4



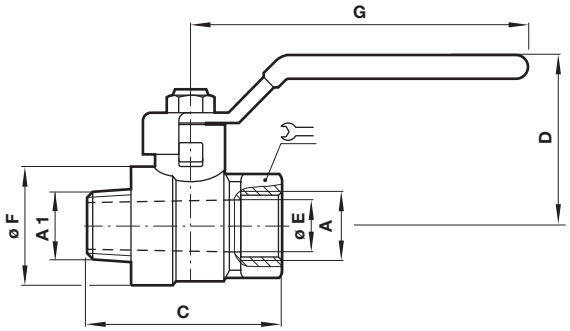

Full bore, male/female

A	A1	C	D	ø E	ø F	G	⌯	Weight (kg)	Model
Rp1/4	R1/4	50	36	8	23	85	18	0,13	602112228
Rp3/8	R3/8	54	36	10	24	85	21	0,16	602112238
Rp1/2	R1/2	65	40	15	30	85	25	0,22	602112248
Rp3/4	R3/4	75	47	20	38	105	31	0,37	602112268
Rp1	R1	86	51	25	46	105	38	0,51	602112288
Rp1 1/4	R1 1/4	99	63	32	58	130	47	0,87	6021122A8

Pressure/temperature diagram

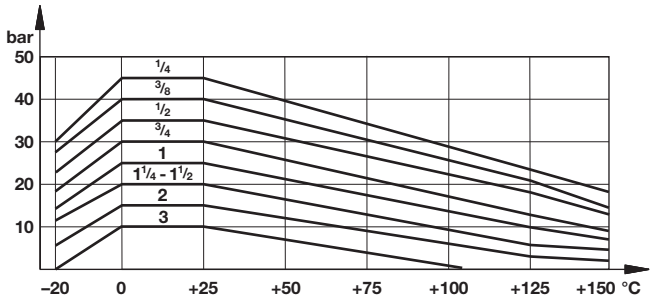

6021 series, 3-way ball valve conforms to ISO 5211

5



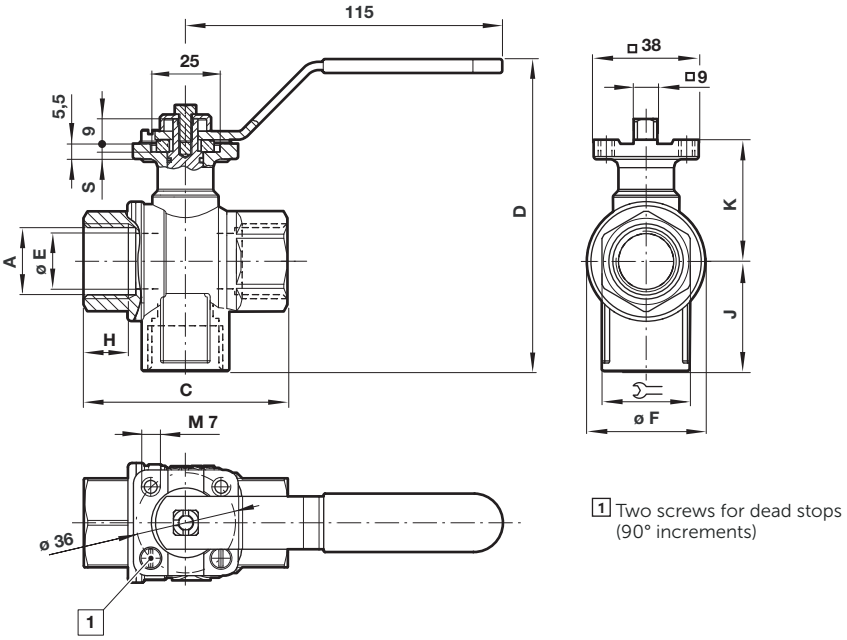

1 Two screws for dead stops (90° increments)

3-way full bore

A	C	D	øF	H	J	K	⌯	Weight (kg)	Model
Rp1/4	52	60	28	11	26	29	22	0,33	602114428
Rp3/8	52	60	28	11,5	26	29	22	0,31	602114438
Rp1/2	64	62	34,5	15	33,5	32	27	0,43	602114448
Rp3/4	74	43	43	16	39,5	42	32	0,57	602114468

Pressure/temperature diagram

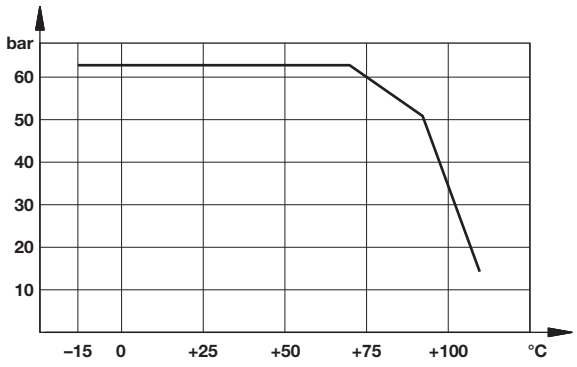

Our policy is one of continued research and development. We therefore reserve the right to amend, without notice, the specifications given in this document. (2003 - 5208h) © 2024 Norgren Ltd.

6021 series, Exhausting ball valve

6



Dimensions in mm
Projection/First angle

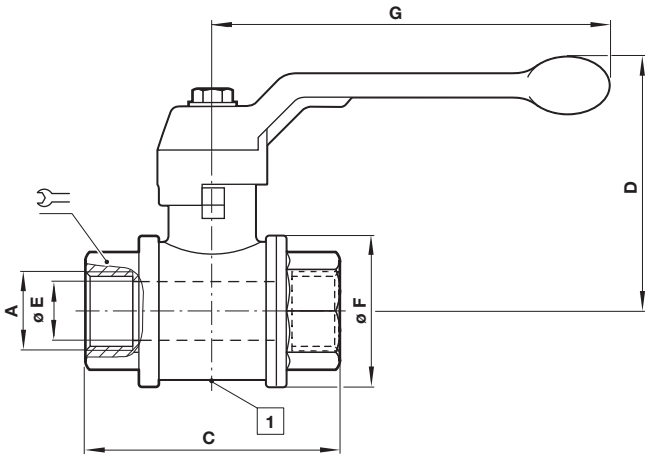

1 Ø 2,5 mm exhaust port

Full bore, female/female

A	C	D	ø E	ø F	Rp		Weight (kg)	Model
Rp1/4	52	61	8	29	100	22	0,26	602113128EX
Rp3/8	54	61	10	29	100	22	0,23	602113138EX
Rp1/2	69	64	15	36	100	27	0,37	602113148EX
Rp3/4	77	76	20	45	120	33	0,63	602113168EX
Rp1	89	80	25	54	120	40	0,91	602113188EX
Rp1 1/2	114	104	40	79	150	-	2,30	6021131B8EX

6018 series, Lockable exhausting ball valve

7



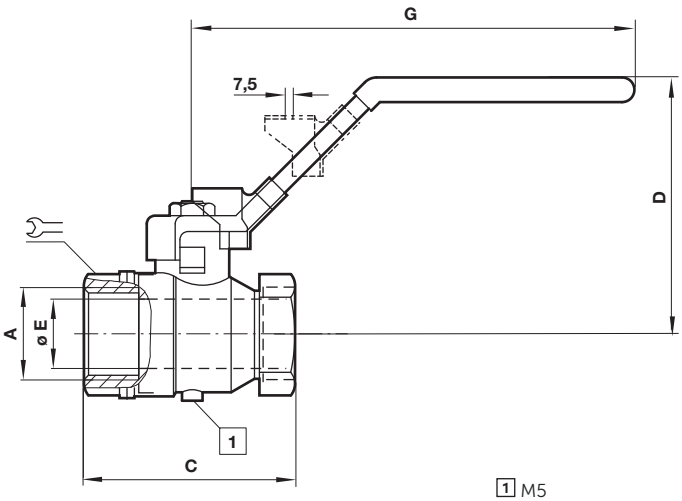

1 M5

Full bore, female/female

A	C	D	ø E	G		Weight (kg)	Model
G1/4	44	45	8	93	20	0,17	601812128
G3/8	44	45	9	93	20	0,16	601812138
G1/2	58	50	14	93	24	0,24	601812148
G3/4	64	57	19	114	30	0,37	601812168
G1	81	61	24	114	40	0,62	601812188

Lever lockable only in closed position. Standard handle accepts Ø 7 mm shackle.
Test specification differs from standard. Please consult our Technical Service for futher details.

Our policy is one of continued research and development. We therefore reserve the right to amend, without notice, the specifications given in this document. (2003 - 5208h) © 2024 Norgren Ltd.

6051 series, Carbon steel ball valve

8

Dimensions in mm
Projection/First angle



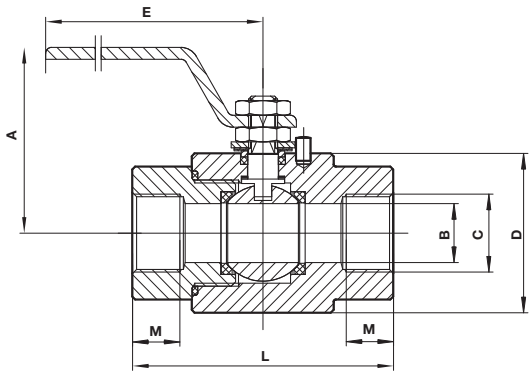

Full bore, female/female

Size	A	B	D	E	L	M	Weight (kg)	Model
1/4"	72	10	42	148	67	11	0.61	605112128
3/8"	72	10	42	148	67	11,4	0.62	605112138
1/2"	75	15	50	148	75	15	0.93	605112148
3/4"	85	20	60	180	90	16,3	1.56	605112168
1"	95	25	68	180	105	19,1	2.27	605112188

Pressure/temperature diagram

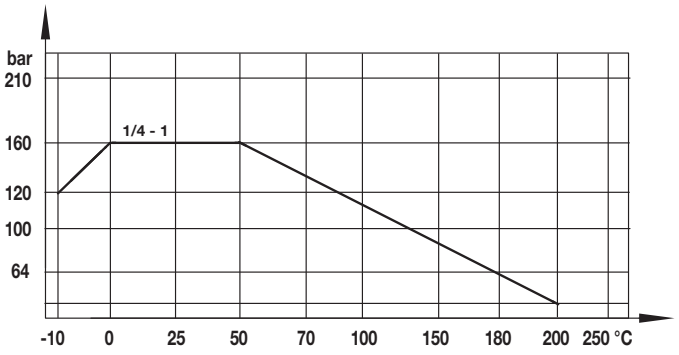

Warning

These products are intended for use in industrial compressed air systems only. Do not use these products where pressures and temperatures can exceed those listed under **»Technical features/ data«**.
Before using these products with fluids other than those specified, for non-industrial applications, life-support systems or other applications not within published specifications,
consult Norgren.
Through misuse, age, or malfunction, components used in fluid power systems can fail in various modes.

The system designer is warned to consider the failure modes of all component parts used in fluid power systems and to provide adequate safeguards to prevent personal injury or damage to equipment in the event of such failure.
System designers must provide a warning to end users in the system instructional manual if protection against a failure mode cannot be adequately provided.
System designers and end users are cautioned to review specific warnings found in instruction sheets packed and shipped with these products.

Our policy is one of continued research and development. We therefore reserve the right to amend, without notice, the specifications given in this document. (2003 - 5208h) © 2024 Norgren Ltd.