BF0910D220

THREE-POLE CONTACTOR, IEC OPERATING CURRENT IE (AC3) = 9A, DC COIL, 220VDC, 1NO AUXILIARY CONTACT



Product designation			Power contactor
Product type designation			BF09
Contact characteristics			
Number of poles		Nr.	3
Rated insulation voltage Ui IEC/EN		V	690
Rated impulse withstand voltage Uimp		kV	6
Operational frequency			
	min	Hz	25
	max	Hz	400
IEC Conventional free air thermal current Ith		A	25
Operational current Ie			
	AC-1 (≤40°C)	A	25
	AC-1 (≤55°C)	A	20
	AC-1 (≤70°C)	A	18
	AC-3 (≤440V ≤55°C)	A	9
	AC-4 (400V)	A	4.9
Rated operational power AC-3 (T≤55°C)			
	230V	kW	2.2
	400V	kW	4.2
	415V	kW	4.5
	440V	kW	4.8
	500V	kW	5.5
	690V	kW	7.5
Rated operational power AC-1 (T≤40°C)			
	230V	kW	9.5
	400V	kW	16
	500V	kW	21
	690V	kW	27
IEC max current Ie in DC1 with L/R ≤ 1ms with 1 poles in series			
	≤24V	A	15
	48V	A	13
	75V	A	12
	110V	A	6
	220V	A	–
IEC max current Ie in DC1 with L/R ≤ 1ms with 2 poles in series			
	≤24V	A	18
	48V	A	18
	75V	A	17
	110V	A	12
	220V	A	1
IEC max current Ie in DC1 with L/R ≤ 1ms with 3 poles in series			
	≤24V	A	20
	48V	A	20
	75V	A	20
	110V	A	15

The characteristics described in this document are subject to updates or modifications at any time. The descriptions, technical and functional information, illustrations and instructions in this brochure are purely illustrative, and are consequently not contractually binding

	220V	A	10
IEC max current Ie in DC1 with L/R ≤ 1ms with 4 poles in series			
	≤24V	A	20
	48V	A	20
	75V	A	20
	110V	A	16
	220V	A	12
IEC max current Ie in DC3-DC5 with L/R ≤ 15ms with 1 poles in series			
	≤24V	A	10
	48V	A	9
	75V	A	8
	110V	A	2
	220V	A	–
IEC max current Ie in DC3-DC5 with L/R ≤ 15ms with 2 poles in series			
	≤24V	A	13
	48V	A	11
	75V	A	10
	110V	A	7
	220V	A	2
IEC max current Ie in DC3-DC5 with L/R ≤ 15ms with 3 poles in series			
	≤24V	A	15
	48V	A	15
	75V	A	13
	110V	A	11
	220V	A	6
IEC max current Ie in DC3-DC5 with L/R ≤ 15ms with 4 poles in series			
	≤24V	A	15
	48V	A	15
	75V	A	15
	110V	A	12
	220V	A	7
Short-time allowable current for 10s (IEC/EN60947-1)		A	150
Protection fuse			
	gG (IEC)	A	25
	aM (IEC)	A	10
Making capacity (RMS value)		A	90
Breaking capacity at voltage			
	440V	A	72
	500V	A	72
	690V	A	71
Resistance per pole (average value)		mΩ	2.5
Power dissipation per pole (average value)			
	Ith	W	1.6
	AC3	W	0.2
Tightening torque for terminals			
	min	Nm	1.5
	max	Nm	1.8
	min	lbin	1.1
	max	lbin	1.5
Tightening torque for coil terminal			
	min	Nm	0.8
	max	Nm	1
	min	lbin	0.8

The characteristics described in this document are subject to updates or modifications at any time. The descriptions, technical and functional information, illustrations and instructions in this brochure are purely illustrative, and are consequently not contractually binding

		max	Ibin	0.74
Max number of wires simultaneously connectable			Nr.	2
Conductor section				
	AWG/Kcmil			
		max		10
	Flexible w/o lug conductor section			
		min	mm²	1
		max	mm²	6
	Flexible c/w lug conductor section			
		min	mm²	1
		max	mm²	4
	Flexible with insulated spade lug conductor section			
		min	mm²	1
		max	mm²	4
Power terminal protection according to IEC/EN 60529				IP20 when properly wired
Mechanical features				
Operating position				
		normal		Vertical plan
		allowable		±30°
Fixing				Screw / DIN rail 35mm
Weight			g	500
Conductor section				
	AWG/kcmil conductor section			
		max		10
Auxiliary contact characteristics				
Thermal current Ith			A	10
IEC/EN 60947-5-1 designation				A600 - P600
Operating current AC15				
		230V	A	3
		400V	A	1.9
		500V	A	1.4
Operating current DC12				
		110V	A	5.7
Operating current DC13				
		24V	A	5.7
		48V	A	2.9
		60V	A	2.3
		110V	A	1.25
		125V	A	1.1
		220V	A	0.55
		600V	A	0.2
Operations				
Mechanical life			cycles	20000000
Electrical life			cycles	2000000
Safety related data				
Performance level B10d according to EN/ISO 13489-1				
		rated load	cycles	2000000
		mechanical load	cycles	20000000
Mirror contats according to IEC/EN 609474-4-1				yes
EMC compatibility				yes
DC coil operating				

The characteristics described in this document are subject to updates or modifications at any time. The descriptions, technical and functional information, illustrations and instructions in this brochure are purely illustrative, and are consequently not contractually binding

DC rated control voltage				V	220
DC operating voltage					
	pick-up				
			min	%Us	70
			max	%Us	125
	drop-out				
			min	%Us	10
			max	%Us	40
Average coil consumption ≤20°C					
			in-rush	W	5.4
			holding	W	5.4
Max cycles frequency					
Mechanical operation				cycles/h	3600
Operating times					
Average time for Us control					
	in AC				
		Closing NO			
			min	ms	8
			max	ms	24
		Opening NO			
			min	ms	10
			max	ms	20
		Closing NC			
			min	ms	14
			max	ms	28
		Opening NC			
			min	ms	7
			max	ms	18
	in DC				
		Closing NO			
			min	ms	54
			max	ms	66
		Opening NO			
			min	ms	14
			max	ms	17
UL technical data					
Full-load current (FLA) for three-phase AC motor					
			at 480V	A	7.6
			at 600V	A	0.375
Yielded mechanical performance					
	for single-phase AC motor				
			110/120V	HP	0.75
			230V	HP	2
	for three-phase AC motor				
			200/208V	HP	3
			220/230V	HP	3
			460/480V	HP	5
			575/600V	HP	7.5
General USE					
	Contactor				
			AC current	A	25
	Auxiliary contacts				
			AC voltage	V	600
			AC current	A	10

The characteristics described in this document are subject to updates or modifications at any time. The descriptions, technical and functional information, illustrations and instructions in this brochure are purely illustrative, and are consequently not contractually binding

		DC voltage	V	250
		DC current	A	1
Short-circuit protection fuse, 600V				
	High fault			
		Short circuit current	kA	100
		Fuse rating	A	30
		Fuse class		J
	Standard fault			
		Short circuit current	kA	5
		Fuse rating	A	60
Contact rating of auxiliary contacts according to UL				A600 - P600

Ambient conditions

Temperature				
	Operating temperature			
		min	°C	-50
		max	°C	70
	Storage temperature			
		min	°C	-60
		max	°C	80
Max altitude			m	3000

Resistance & Protection

Pollution degree				3

Dimensions

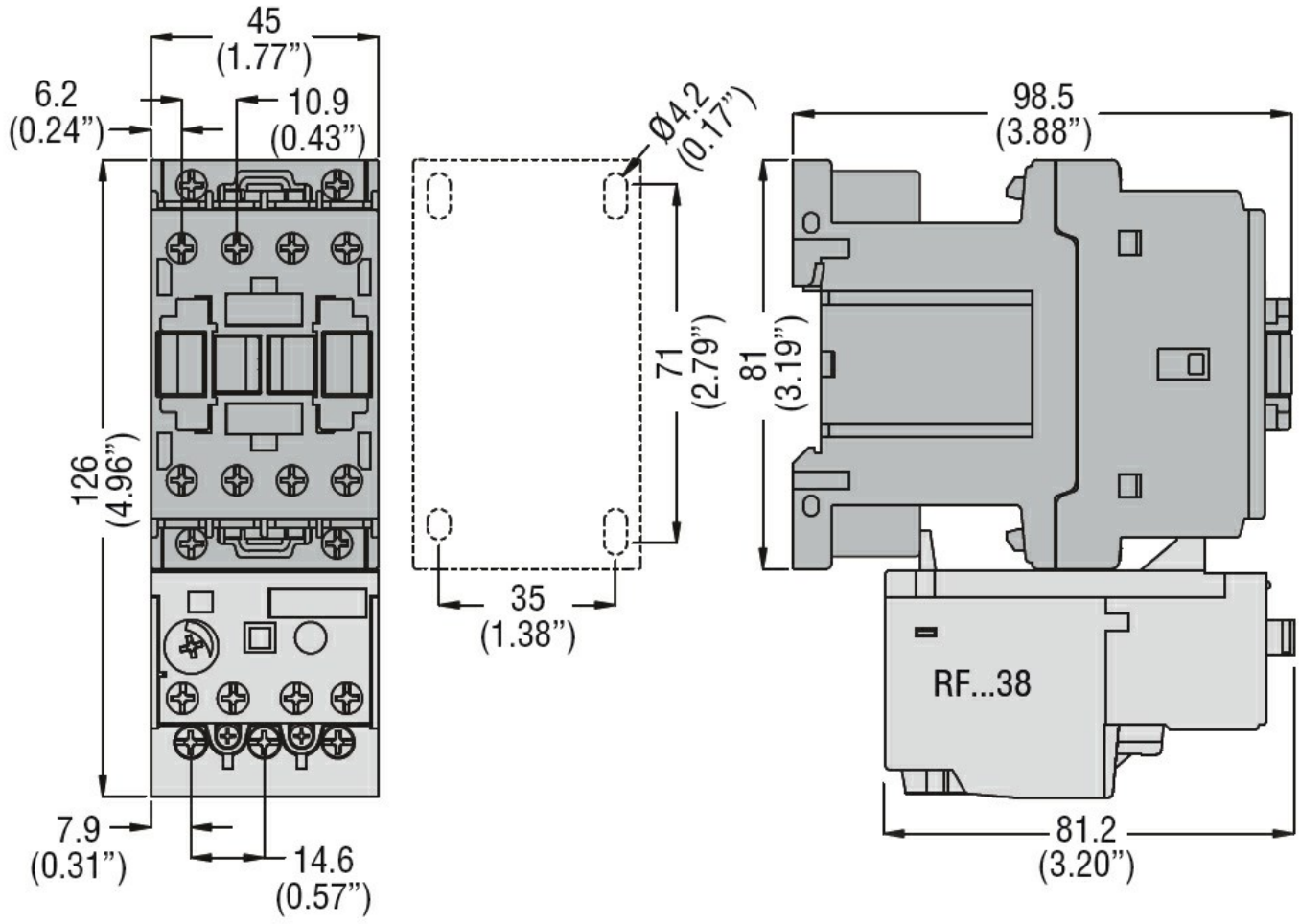

Wiring diagrams

The characteristics described in this document are subject to updates or modifications at any time. The descriptions, technical and functional information, illustrations and instructions in this brochure are purely illustrative, and are consequently not contractually binding

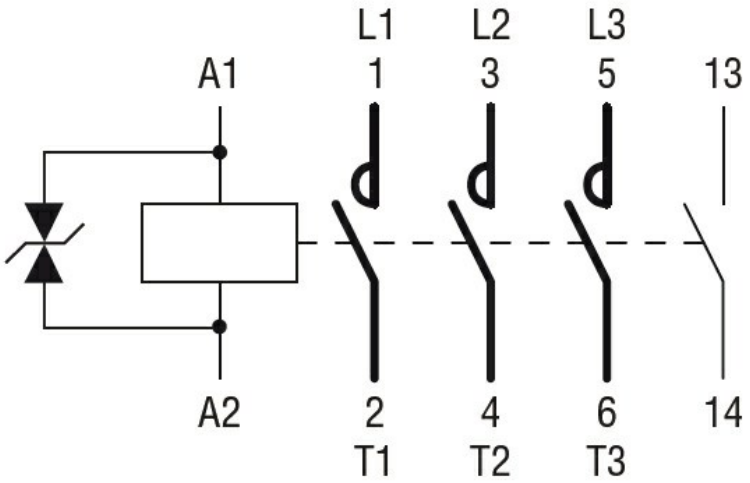

Certifications and compliance

Compliance

CSA C22.2 n° 60947-1
CSA C22.2 n° 60947-4-1
IEC/EN/BS 60947-1
IEC/EN/BS 60947-4-1
UL 60947-1
UL 60947-4-1

Certificates

CCC
cULus
EAC

ETIM classification

ETIM 8.0	EC000066 - Power contactor, AC switching

The characteristics described in this document are subject to updates or modifications at any time. The descriptions, technical and functional information, illustrations and instructions in this brochure are purely illustrative, and are consequently not contractually binding