PATROL FLASHING SOUNDERS 105/107 dB(A) / 5/10 J
PA X 1-05 / PA X 5-05 / PA X 5-10





PATROL – the new generation of sounder/flashing light combinations.Three dimensional innovation.

- Safe – an incorrect installation is virtually impossible.
- Easy – significantly shorter assembly and installation times.
- Economical – extremely high efficiency and good penetration of acoustical obstacles significantly reduce the required number of sounders.
- Pre-wired sounder and light ex works.
- Various light intensities available to support best match of audible and visual coverage.

IP 66	IK08	+55 °C / –40 °C		EN 54-3	EN 54-23	VdS	UL	10 Years	EAC	M12
protection system	impact-proof housing	operating temperature	acoustic penetration	external tone selection	PA X 1-05 24 V DC	PA X 1-05 24 V DC	PA X 1-05 24 V DC		warranty		connector (option)

PRODUCT		PA X 1-05					
DATA							
Operating range		187–255 V	90–135 V	18–30 V	40–60 V	18–30 V	12–15 V
		AC 50 I 60 Hz			DC		
Nominal current consumption [1]		65–70 mA @ 230 V	110–130 mA	315–365 mA @ 24 V	190–150 mA	315–365 mA	610–625 mA

PRODUCT		PA X 5					
DATA							
Operating range		187–255 V	90–135 V	18–30 V	40–60 V	18–30 V	12–15 V
		AC 50 I 60 Hz			DC		
Nominal current consumption [1]	5 J	65–70 mA @ 230 V	110–130 mA	315–365 mA @ 24 V	190–150 mA	315–365 mA	610–625 mA
	10 J	150–155 mA	250–260 mA	1460–1520 mA	320–380 mA	565–620 mA	1200–1220 mA

PRODUCT		PA X 1-05	PA X 5-05	PA X 5-10
Sound pressure level		105 dB(A)	107 dB(A)	107 dB(A)
Sound pressure level @DIN-tone		104 dB(A)	105 dB(A)	105 dB(A)
Sound level reduction		max. –12 dB via potentiometer		
Alarm tones		80 / 4 tones are externally selectable		
Flash energy and flash rate		5 J @ 1 Hz = 60 flashes/min	5 J @ 1 Hz = 60 flashes/min	10 J @ 1 Hz = 60 flashes/min
Light intensity (DIN 5037) [2]		50 cd	56 cd	149 cd
Max. viewing distance		164 m	173 m	283 m
Operating temperature		–40 °C ... +55 °C		
Relative humidity		90 %		
Protection system (EN 60529)		IP 66		
Protection class		II		
Service life of the light source		light emission still 70 % after 8,000,000 flashes		
Material	sounder	PC / ABS blend similar to RAL 3000 (flame red) / RAL 7035 (light grey) / RAL 9003 (signal white)		
	lens flashing light	polycarbonate (PC)		
Cable entry		3x M20 knock-outs prepared (on side), 1 knock-out on back		
Integrated seal with cable entry		6–13 mm (feed-through grommet)		
Connecting terminals		2.5 mm² fine wire with cable end sleeve, AWG 16		
Weight	AC	725 g	983 g	
	DC	560 g	800 g	

[1] power consumption dependent on operating voltage
[2] with a clear lens

DIMENSIONS

PA X 1-05

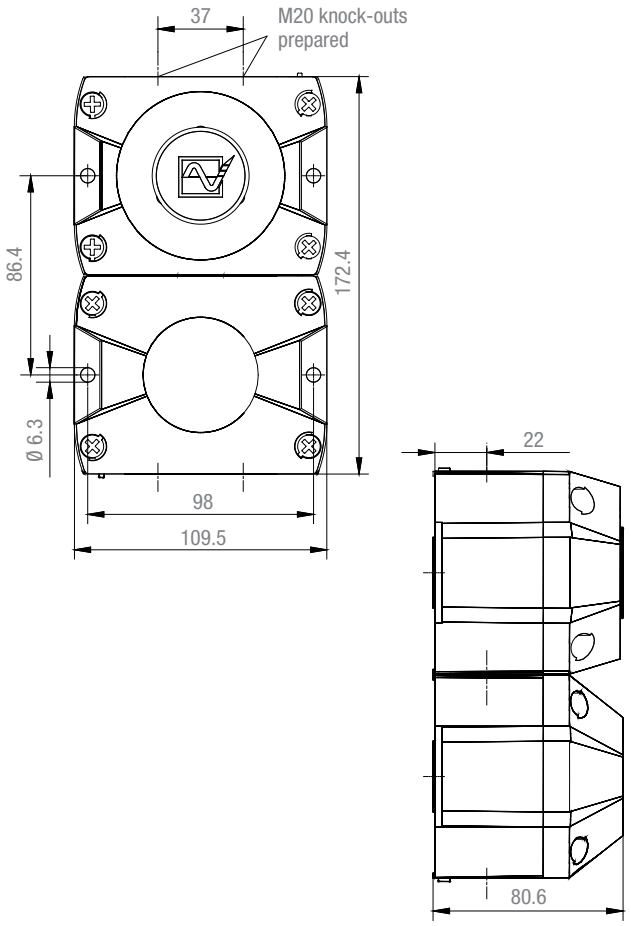

PA X 5-05

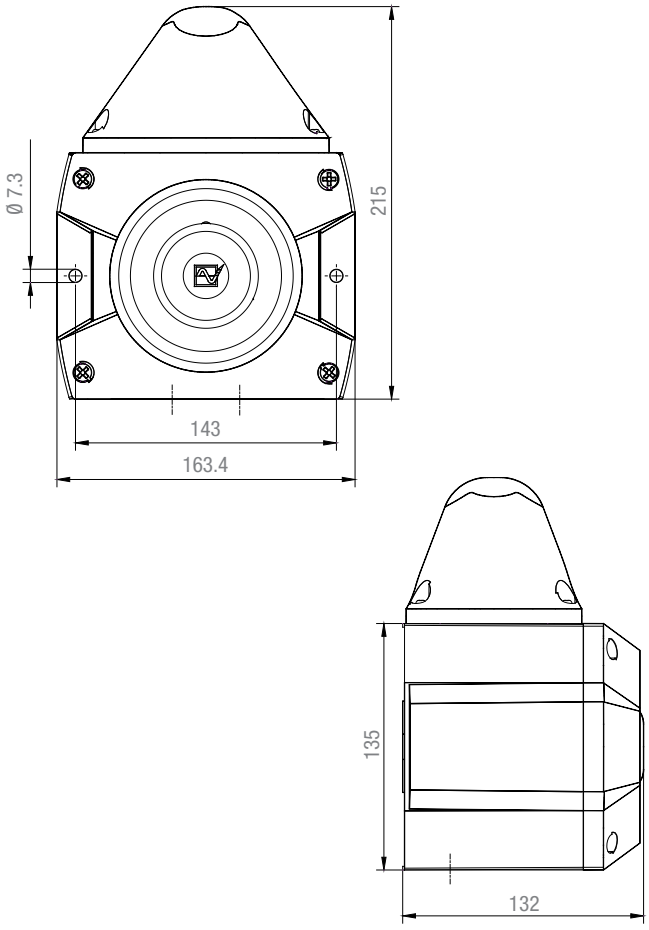

OPTIONS/ACCESSORIES

DNV

PA X 1-05

SSM, 24 V DC

Enclo-sure fitting

Surface gasket

Tamper-proof sealing

ARTICLE NO.		PA X 1-05			PA X 5-05		
HOUSING COLOUR	LENS COLOUR	230 V AC	115 V AC	24 V DC	230 V AC	115 V AC	24 V DC
red	transparent	23311101000	23311151000	23311801000 [1]	23351101000	23351151000	23351801000
red	yellow	23311103000	23311153000	23311803000	23351103000	23351153000	23351803000
red	orange	23311104000	23311154000	23311804000	23351104000	23351154000	23351804000
red	red	23311105000	23311155000	23311805000 [1]	23351105000	23351155000	23351805000
grey	transparent	23311101055	23311151055	23311801055 [1]	23351101055	23351151055	23351801055
grey	yellow	23311103055	23311153055	23311803055	23351103055	23351153055	23351803055
grey	orange	23311104055	23311154055	23311804055	23351104055	23351154055	23351804055
grey	red	23311105055	23311155055	23311805055 [1]	23351105055	23351155055	23351805055

Article numbers for other voltages and versions on request.

[1] **Version with EN 54-23 approval.**

ARTICLE NO.		PA X 1-05	PA X 5-05
Enclosure fitting	For connection (daisy-chaining) of several sounders of the PATROL series.	28300000003	
Surface gasket	Sealing of the sounder installation surface when, e.g. cable entry is executed from the back.	28300000004	28300000005
Tamper-proof sealing (pack of 4)	Anti-tamper sealing for fasteners of the PATROL devices after installation in order to prevent manipulation of the devices.		28300000002

TONE TABLE

NO.	DESCRIPTION
1	no tone
2	Sawtooth, DIN tone 33404-3 Germany (emergency signal), PFEER PTAP
9	Slow whoop, fire alarm, UK BS5839-1
11	Interrupted tone (fast)
13	Interrupted tone
15	Slow whoop, evacuation alarm Netherlands NEN 2575
16	Slow whoop, evacuation alarm Australia AS2220
18	Slow whoop, NFPA
22	Pulsating tone, Australien alert AS1670, ISO8201
23	Siren
24	Siren
25	Siren
26	Siren, industrial alarm Germany
27	Sweeping
29	Sweeping (fast)
30	Sweeping
31	Sweeping, France NFC48-265
33	Sweeping (medium), UK BS5839-1
34	Sweeping (fast)
35	Sweeping (fast), UK BS5839-1
36	Sweeping
43	Sweeping
44	Sweeping, IMO 3d, Germany KTA3901 evacuation alarm
45	Sweeping
46	Sweeping, general alarm Finland
52	Continuous tone
53	Continuous tone
54	Continuous tone, Finland (all-clear signal)
55	Continuous tone, PFEER gas alarm
56	Continuous tone
57	Continuous tone, UK BS5839-1
59	Continuous tone
60	Continuous tone
61	Continuous tone
63	Continuous tone
65	Continuous tone, Sweden SS031711 (all-clear signal)
66	Continuous tone
67	Continuous tone, Germany KTA3901 (all-clear signal)
68	Continuous tone
69	Continuous tone
71	Continuous tone
77	Interrupted tone
82	Interrupted tone, PFEER (general alarm), UK BS5839-1 (back-up alarm)
83	Interrupted tone, PFEER (general alarm)
88	Interrupted tone
90	Interrupted tone
91	Interrupted tone
92	Interrupted tone
93	Interrupted tone (fast), Horn
97	Interrupted tone
98	Interrupted tone, Sweden SS031711 (emergency signal)
100	Interrupted tone, industrial alarm Germany
101	Interrupted tone, Sweden SS031711 (important message (pre-mess))
102	Interrupted tone, Sweden SS031711 (local warning)
103	Interrupted tone, Sweden SS031711 (air raid warning)
104	Interrupted tone, Sweden SS031711 (emergency signal)
107	Interrupted tone, Germany KTA3901 (evacuation alarm)
109	Interrupted tone, Australia AS2220, AS1610, AS1670
110	Interrupted tone, (fast variable), bell
111	Interrupted tone, ISO8201 (emergency evacuation signal), USA (evacuation alarm)
112	Interrupted tone, ISO8201 (emergency evacuation signal)
113	Interrupted tone, ISO8201 (emergency evacuation signal), sweeping

TONE TABLE

NO.	DESCRIPTION	
115	Interrupted tone, IMO (telephone call)	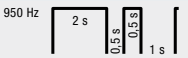
116	Interrupted tone, IMO (leave ship)	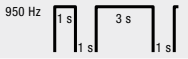
117	Interrupted tone, IMO SOLAS III/50 + SOLAS III/6.4 (general alarm)	
122	Alternating tone	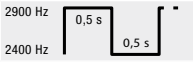
123	Alternating tone	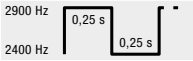
124	Alternating tone, Singapore	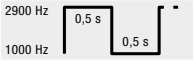
125	Alternating tone	
128	Alternating tone	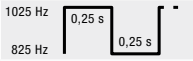
130	Alternating tone, UK BS5839-1 (fire alarm)	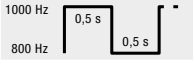

NO.	DESCRIPTION	
131	Alternating tone, UK BS5839-1 (fire alarm, railway crossing)	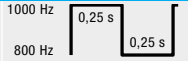
135	Alternating tone, UK BS5839-1 (fire alarm, increased urgency – railway crossing)	
142	Alternating tone	
143	Alternating tone, industrial alarm Germany	
144	Alternating tone	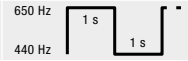
146	Alternating tone, France NFS 32-001 (fire alarm)	
147	Alternating tone, Sweden SS031711	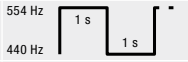
148	Alternating tone, Sweden SS031711	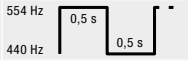
152	Alternating tone (two tone chime)	

CONTROL OF THE TONES

DIP-SWITCH (SETTING OF BASIC TONE)						EXTERNAL TONE SELECTION		
						C1	C2	C1+C2
1	2	3	4	5	6	BASIC TONE	TONE NO.	
						1	2	88	57
ON						2 *	128	112	57
	ON					2	26	100	93
ON	ON					2	61	131	112
		ON				9	57	11	82
ON		ON				15	131	52	112
	ON	ON				16	109	52	56
ON	ON	ON				18	111	57	68
			ON			22	16	109	68
ON			ON			23	131	52	112
	ON		ON			24	131	52	131
ON	ON		ON			25	131	52	92
		ON	ON			26	2	100	93
ON		ON	ON			27	123	52	92
	ON	ON				29	35	52	61
ON	ON	ON				30	27	52	77
				ON		31	131	52	57
ON				ON		33	30	52	35
	ON			ON		34	35	52	93
ON	ON			ON		35	27	52	110
		ON		ON		36	146	67	57
ON		ON		ON		43	131	52	91
	ON	ON		ON		45	2	57	93
ON	ON	ON		ON		52	15	65	82
			ON	ON		54	46	54	131
ON			ON	ON		55	131	52	128
	ON		ON	ON		56	82	35	33
ON	ON		ON	ON		59	143	59	101
		ON	ON	ON		60	131	52	125
ON		ON	ON	ON		65	131	52	93
	ON	ON	ON	ON		66	110	52	107
ON	ON	ON	ON	ON		69	131	52	110

DIP-SWITCH (SETTING OF BASIC TONE)						EXTERNAL TONE SELECTION		
						C1	C2	C1+C2
1	2	3	4	5	6	BASIC TONE	TONE NO.	
					ON	71	131	52	93
ON					ON	77	61	52	122
	ON				ON	82	131	52	83
ON	ON				ON	83	56	2	82
		ON			ON	88	2	57	128
ON		ON			ON	90	131	52	125
	ON	ON			ON	91	30	52	110
ON	ON	ON			ON	92	33	52	57
			ON		ON	93	2	128	57
ON			ON		ON	97	2	63	93
	ON		ON		ON	100	131	52	125
ON	ON		ON		ON	101	98	102	65
		ON	ON		ON	103	131	65	147
ON		ON	ON		ON	104	103	65	101
	ON	ON	ON		ON	109	16	52	22
ON	ON	ON	ON		ON	110	131	61	91
				ON	ON	112	2	57	128
ON				ON	ON	113	52	123	104
	ON			ON	ON	115	117	116	44
ON	ON			ON	ON	116	117	93	125
		ON		ON	ON	117	93	116	125
ON		ON		ON	ON	123	27	52	77
	ON	ON		ON	ON	124	53	83	2
ON	ON	ON		ON	ON	130	2	107	67
			ON	ON	ON	131	2	112	57
ON			ON	ON	ON	135	16	56	109
	ON		ON	ON	ON	142	2	54	88
ON	ON		ON	ON	ON	143	59	93	33
		ON	ON	ON	ON	144	110	61	2
ON		ON	ON	ON	ON	146	31	67	57
	ON	ON	ON	ON	ON	148	131	52	92
ON	ON	ON	ON	ON	ON	152	110	61	13

* factory setting

CONNECTION DIAGRAM

PA X 1-05 | PA X 5-05 light

Common connection of flashing light and sounder
(delivery condition)

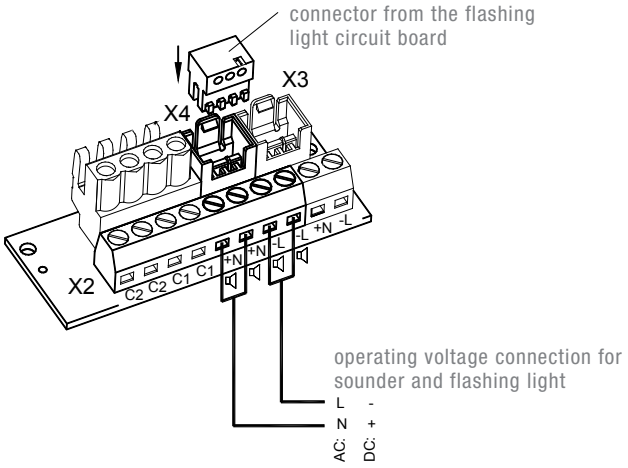

Separated connection of flashing light and sounder

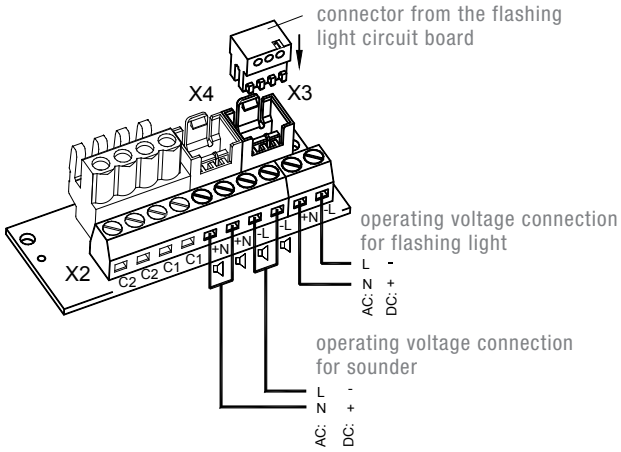

PA X 1-05 | PA X 5-05 sounder

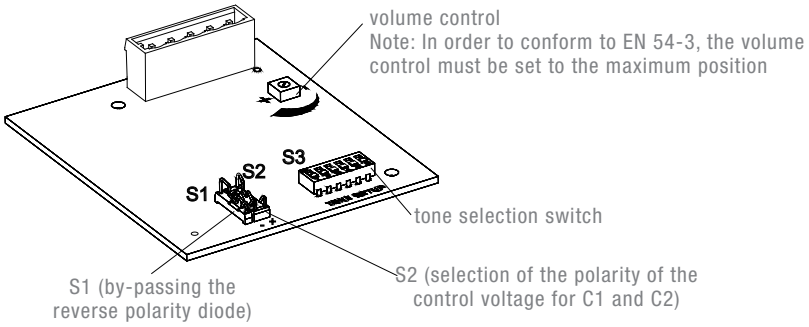

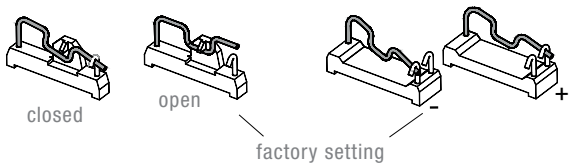

CONFORMITY TO STANDARDS

The acoustic parameters conform to the European standard DIN EN ISO 7731:
“Ergonomic – alarms for public areas and workplaces – acoustic alarms“.

The requirement for an acoustic alarm signal can be found in the harmonised standards:

EN 60204-1	Electrical equipment of machines
EN 60825-1	Radiation safety of laser devices, identical to IEC 825 and DIN-VDE 0837