GEFRAN

GRS-H 15/25/30/40/50/60/75/90/120A

ULTRA-COMPACT STATIC POWER UNITS WITH DC / AC LOGIC CONTROL

MAIN APPLICATIONS

- Extrusion, injection, blow moulding, thermoforming of plastics
- Vulcanization of rubber
- Synthetic fibre production and polymerisation
- Packing and packaging
- Dryers for ceramics and building elements
- Industrial electric ovens
- Food processing plants
- Chemical and pharmaceutical industry



MAIN FEATURES

- Ultra-compact dimensions from 15A to 120A
- DIN rail and panel mounting
- Switching at zero voltage changeover
- Input command from DC/AC logic signal with push-in connectors; signalling leds
- Cage clamps for power cables
- Load voltage 480V, 600V AC
- SCCR 100 kA
- Thermal alarm option with led and alarm output
- Interrupted load option with led and alarm output
- Internal overvoltage protection

PROFILE

Correct management of electrical heating elements for industrial heating applications
requires robust, safe, interference-free, fast and diagnostically capable static contactors.
The range of static contactors with GRS-H heatsink meets all these requirements, with current ratings from 15 to 120 Amperes and voltages up to 600 V AC, with extremely compact size in every single current level.
The thermal design of all models guarantees the continuous supply of the rated current at an ambient temperature of 40°C through high efficiency heat sinks, assisted by fans for the 90A and 120A models.
The derating curves show how higher current values can also be achieved, at lower temperatures, and illustrates the possibility of mounting various devices packed together on the DIN rail.

GRS COMMAND SIGNAL CONNECTION

The GRS-H series can be controlled by DC and AC logical signals managed through push-in connectors for a faster and easier connection, even without tools.
The ON / OFF status of the static LED on the front panel, for an immediate view of its operation.

POWER CONNECTIONS

Both the line voltage terminal available on the upper part of the device and the load terminal on the lower part are of the “cage” type, which offers the best and safest seal even for cables of different cross-sections, whether mounted with a cable lug or simply stripped.

DIAGNOSTICS AND ALARMS

It is increasingly vital for operators and maintainers to recognize possible anomalies in the system immediately and solve them quickly in order to ensure the efficiency and profitability of machinery and plants. The GRS-H series offers a series of diagnostic information associated with a physical alarm output with voltage-free or PNP-type isolated contact.
The thermal alarm is triggered if heat dissipation exceeds a critical threshold, signalling it with a yellow led on the front panel, interrupting the power supply and triggering the alarm output (NO or NC). This function is available for all sizes as an option.
The absence of current on the load (for models with DC control) is indicated by a red led on the front panel and by the activation of the alarm output, as well as by the absence of line voltage.
Alarm output status is memorized: in the presence of a 24 V DC auxiliary power supply, the alarm will be memorized even in the event of an OFF command.
The alarm is reset when normal operating conditions are restored, or when the 24 V DC auxiliary power supply is switched off and on again.

TECHNICAL DATA

MAIN FEATURES

Category of use: AC51
Rated working voltage
- 480Vac (max. range 24...530Vac)
- 600Vac (max range 24 ... 660Vac)

Rated frequency: 50/60Hz
Non-repetitive voltage:
- ì1200Vp for model with rated voltage 480Vac
- 1400Vp for model with rated voltage 600Vac

Switching voltage for zero: < 20V
Activation time: = 1/2 cycle
Deactivation time: = 1/2 cycle
Potential drop at rated current:
= < 1,2Vrms
Power factor = 1

CONTROL INPUT

- DC INPUT

Type " D/DD-0 ":
Max. input: < 9mA @32V
Max. reverse voltage: 36Vdc
Control voltage: 5,1...32Vdc
Activation voltage: > 5,1Vdc
Deactivation voltage:< 5Vdc
Input impedance 500 kΩ

Type " D-1/2/3/5 ":
Power supply (range from 6 to 32 Vdc, Imax < 14 mA at 32V)
GRS-H-90..120A-..FAN63: Power supply GRS-H + Fan(Range from 20 to 27 Vdc, Imax <150mA at 24V with Fan active)
Max. reverse voltage: 36Vdc

Maximum control signal current absorption: <3.2mA
@32V
Control voltage: 3...32Vdc
Activation voltage: > 3Vdc
Deactivation voltage:< 1,8Vdc
Input impedance 9,45 kΩ

- AC INPUT (Type "A"):
Control voltage: 20...260 Vac/Vdc
INSTALL FUSE (3A MAX) ON THE CONTROL INPUT CIRCUIT
Activation voltage: > 15Vac/Vdc
Deactivation voltage: < 6Vac/Vdc
Current draw: <= 8 mAac/dc @ 260 Vac/Vdc

ALARM OUTPUT OPTION

(Type "D" Input Version)
A load or line failure or an overtemperature alarm commands:

- Options 1/2/5: one voltage-free contact (solid state N.C or N.O.), max. properties:
- N.O. version 30V-150mA conduction resistance: ≤ 1Ω
- N.C. version 30V-50mA conduction resistance: ≤ 15Ω
- Option 3: two normally inactive (parallelable) PNP digital outputs, one for load failure and the other for overtemperature (properties: Imax =150mA Vout= + V DC power supply -1V).

Maximum interrupted load alarm trip delay < 400ms

ALARM OUTPUT OPTION

(Type "A" Input Version)
The over-temperature alarm commands a voltage-free contact (solid state N.C.), max. properties:
30V-50mA conduction resistance: ≤ 15 Ω

OUTPUTS

GRS-H 15

Rated current: 15 A@40°C in continuous service
Non-repetitive overcurrent t=20 ms: 620A
I2t for blowout: ≤ 1800A2s
dV/dt critical with output deactivated: 1000V/µs

GRS-H 25

Rated current: 25 A@40°C in continuous service
Non-repetitive overcurrent t=20 ms: 620A
I2t for blowout: ≤ 1800A2s
dV/dt critical with output deactivated: 1000V/µs

GRS-H 25I

Rated current: 25 A@40°C in continuous service
Non-repetitive overcurren t=20 ms: 1600A
I2t for blowout: ≤ 12800A2s
dV/dt critical with output deactivated: 1000V/µs

GRS-H 30

Rated current: 30 A@40°C in continuous service
Non-repetitive overcurrent t=20 ms: 620A
I2t for blowout: ≤ 1800A2s
dV/dt critical with output deactivated: 1000V/µs

GRS-H 30I

Rated current: 30 A@40°C in continuous service
Non-repetitive overcurrent t=20 ms: 1600A
I2t for blowout: ≤ 12800A2s
dV/dt critical with output deactivated: 1000V/µs

GRS-H 40

Rated current: 40 A@40°C in continuous service
Non-repetitive overcurrent t=20 ms: 620A
I2t for blowout: ≤ 1800A2s
dV/dt critical with output deactivated: 1000 V/µs

GRS-H 50

Rated current: 50 A@ 40°C in continuous service
Non-repetitive overcurrent t=20 ms: 1600A
I2t for blowout: ≤ 12800A2s
dV/dt critical with output deactivated: 1000V/µs

GRS-H 60

Rated current: 60 A@ 40°C in continuous service
Non-repetitive overcurrent t=20 ms: 1600A
I2t for blowout: ≤ 12800A2s
dV/dt critical with output deactivated: 1000V/µs

GRS-H 75

Rated current: 75 A@ 40°C in continuous service
Non-repetitive overcurrent t=20 ms: 1600A
I2t for blowout: ≤12800A2s
dV/dt critical with output deactivated: 1000V/µs

GRS-H 90

Rated current: 90A@ 40°C in continuous service (complete with specified fan)
Non-repetitive overcurrent t=20 ms: 1500A
I2t for blowout: ≤ 11250A2s
dV/dt critical with output deactivated: 1000V/µs

GRS-H 120

Rated current: 120A@ 40°C in continuous service (complete with specified fan)
Non-repetitive overcurrent t=20 ms: 1500A
I2t for blowout: ≤ 11250A2s
dV/dt critical with output deactivated: 1000V/µS

THERMAL PROTECTION

(Optional, always present in GRS-H with current size ≥ 50A):
The temperature of the SCR module is constantly monitored inside the device.
When the maximum temperature threshold of the internal SCR is exceeded, current conduction to the load is interrupted and the yellow thermal protection LED comes on to signal the condition.

ISOLATION

Rated isolation voltage input/output: 4000VACrms 1min

AMBIENT CONDITIONS

- **Working temperature:** from 0 to 80°C (according with heat sink curves)

- **Max. relative humidity:** 90% non-condensing at 40°C
- **Max. installation altitude:** 6600ft above sea level
- **Pollution level :** 2
- **Storage temperature:** -20..+85°C

Solid State Relay Dissipated Power Calculation

Single-phase relay Pd = 1.2 * IRMS [W]
IRMS = single-phase load current

Installation notes

Use the extra-rapid fuse shown in the catalogue according to the connection example supplied.
Applications with static units must also include a safety circuit breaker for disconnecting the power line from the load.
To obtain high reliability of the device, it is essential to install it correctly inside the panel in order to obtain adequate heat exchange between the heat sink and the surrounding air under conditions of natural convection.
Mount the device vertically (maximum 10° inclination from the vertical axis)

- Vertical distance between a device and the panel wall >50mm
- Horizontal distance between a device and the panel wall at least 20mm
- Vertical distance between one device and another at least 50mm.
- Horizontal distance between one device and another at least 20mm (in the event of installation at shorter distances, see derating curves).

Make sure that the cable ducts do not reduce these distances; in this case, mount the units overhanging the panel, so that the air can flow vertically on the heat sink without hindrance.

Limits of use

- Ambient temperature limits, depending on derating curves.
- Need for air exchange with the outside or an air conditioner to transfer the dissipated power to the outside of the panel.
- Installation limits (distances between devices to ensure dissipation under natural convection conditions)
- Maximum voltage limits and derivative of the transients present on the line, for which the static unit provides internal protection devices (depending on the models).
- Presence of leakage current < 3mA (max. value with nominal voltage and junction temperature of 125°C).

DIMENSIONS AND MOUNTING MEASUREMENTS

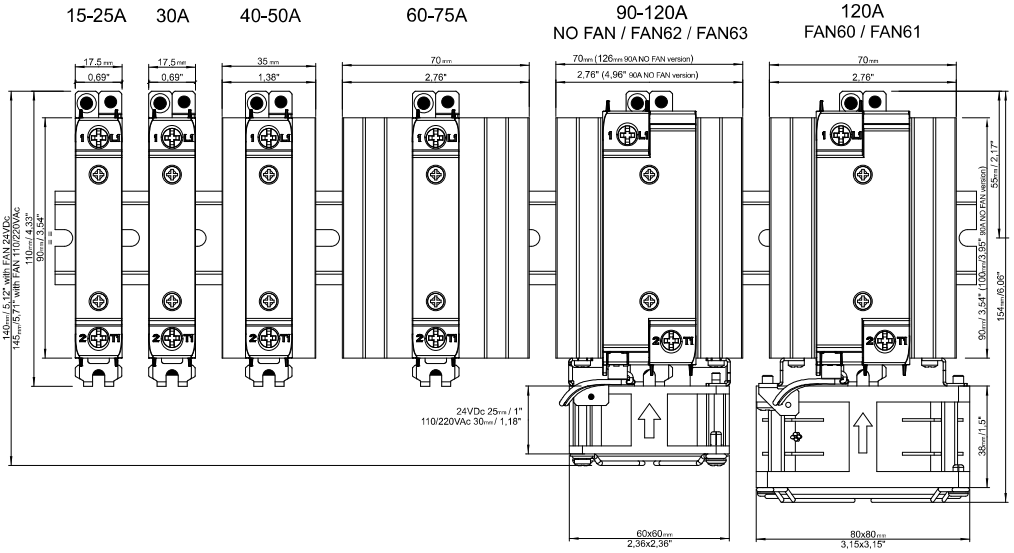

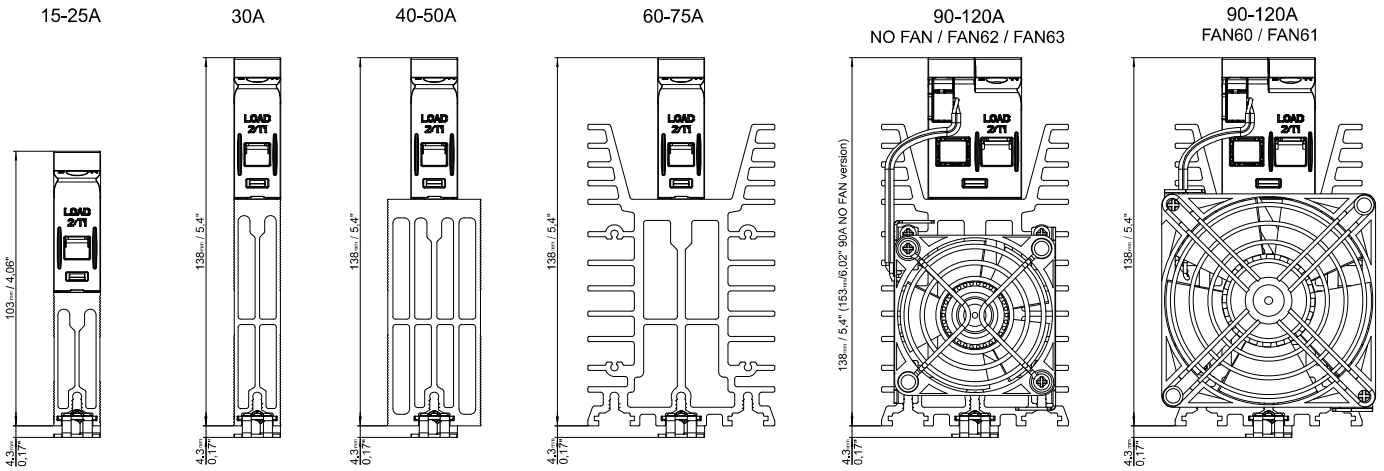

Model	15-25A	30A	40-50A	60-75A	90-120A
Weight [g]	194	227	288	688	706

DIN RAIL FIXING

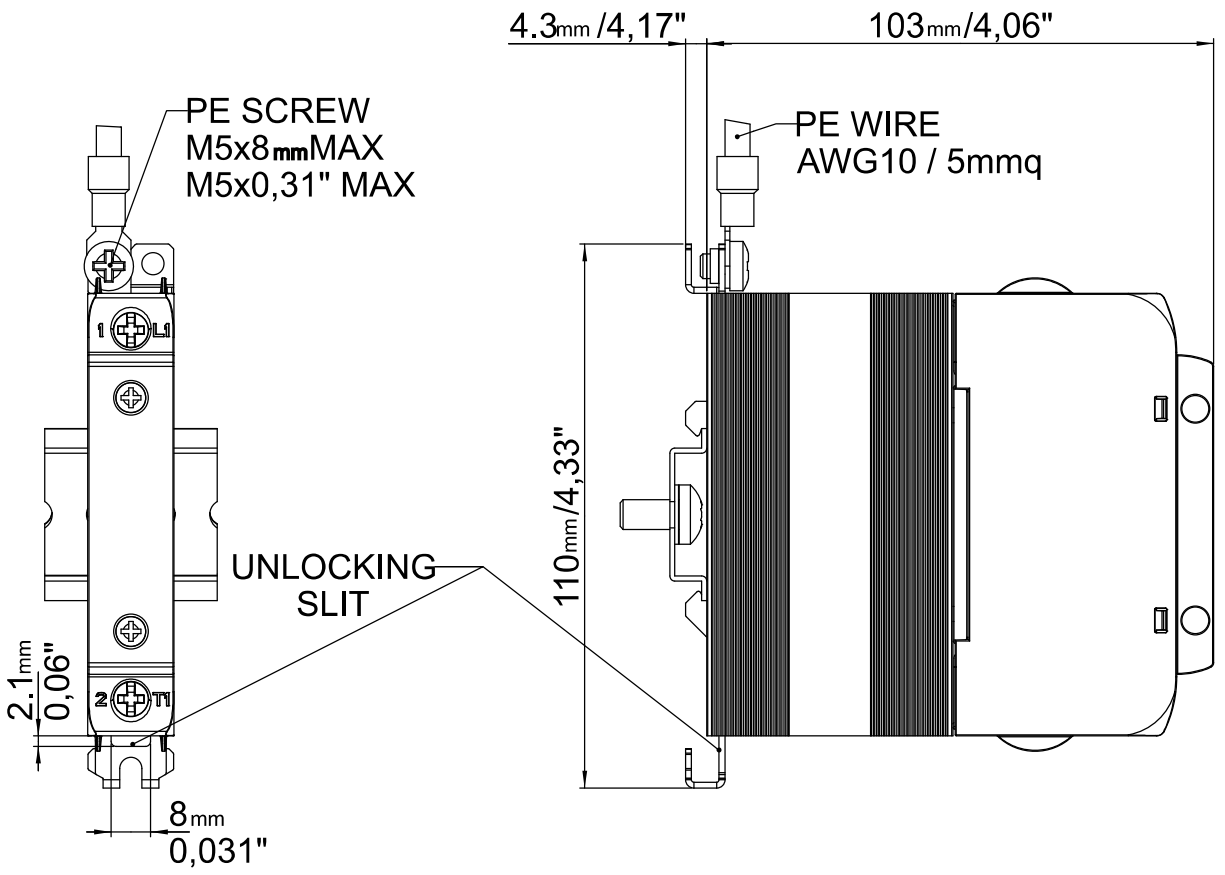

DIN rail coupling sequence

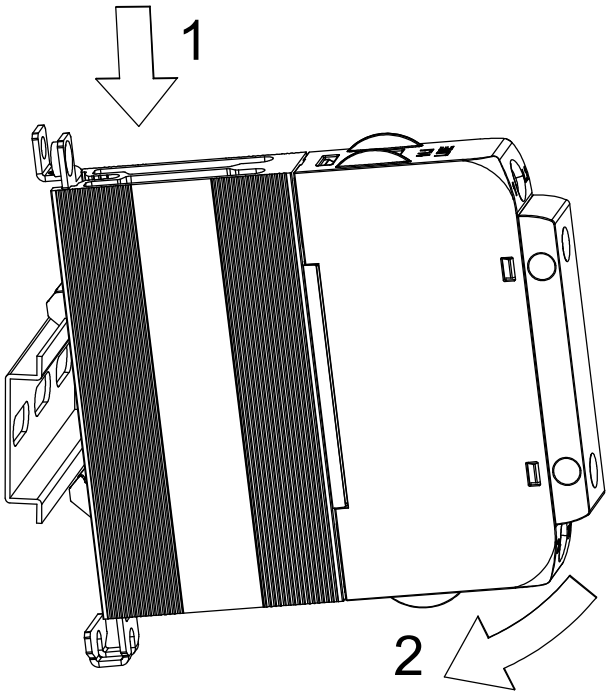

DIN rail release sequence

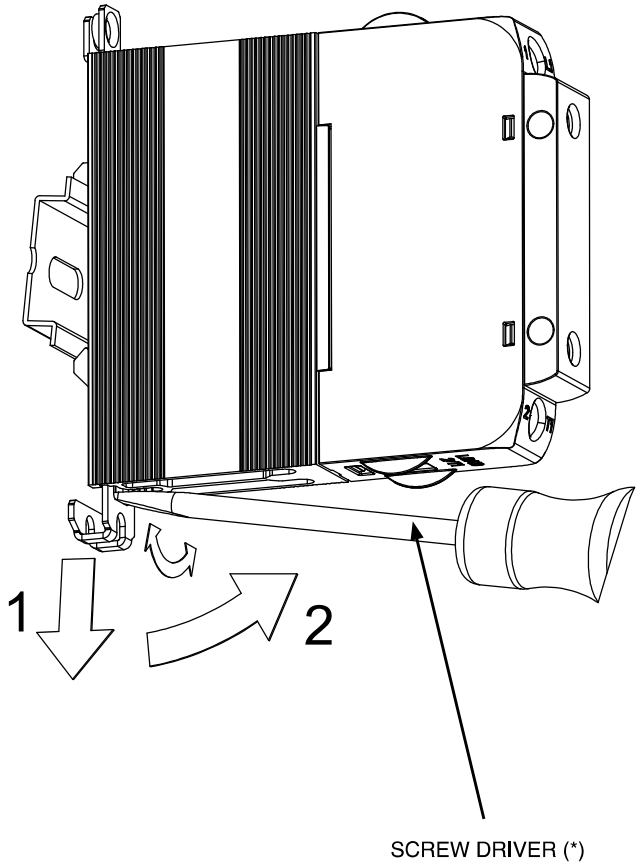

(*) Use of a slotted screwdriver with a max. diameter of 6mm is recommended

PANEL FIXING

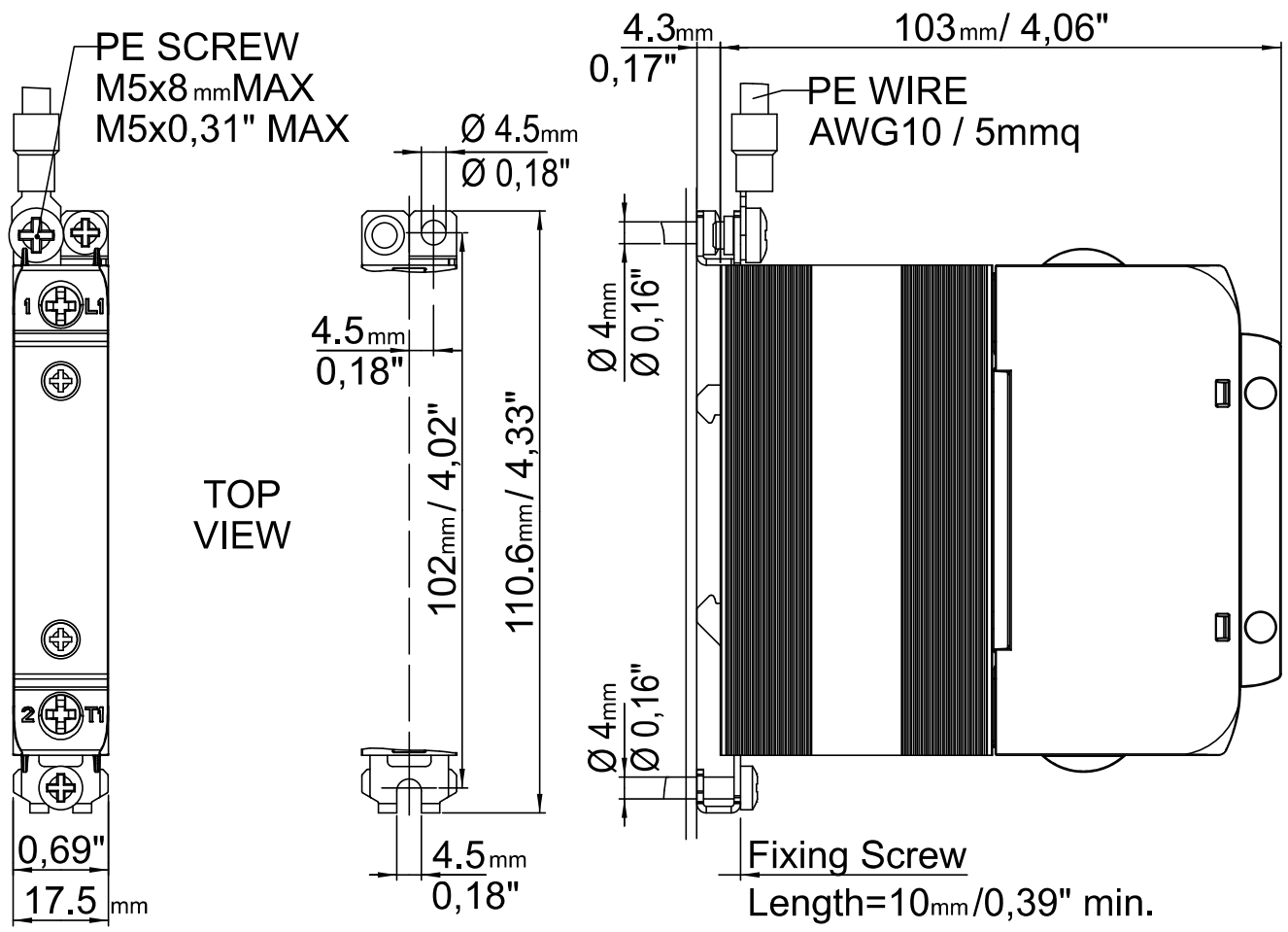

NOTE: For the GRS-H 90A version without a fan, fixing with panel screws is not provided.

DESCRIPTION OF CONNECTIONS

GRS-H...D-0 **GRS-H...DD-0** **GRS-H...D-1** **GRS-H...D-2**

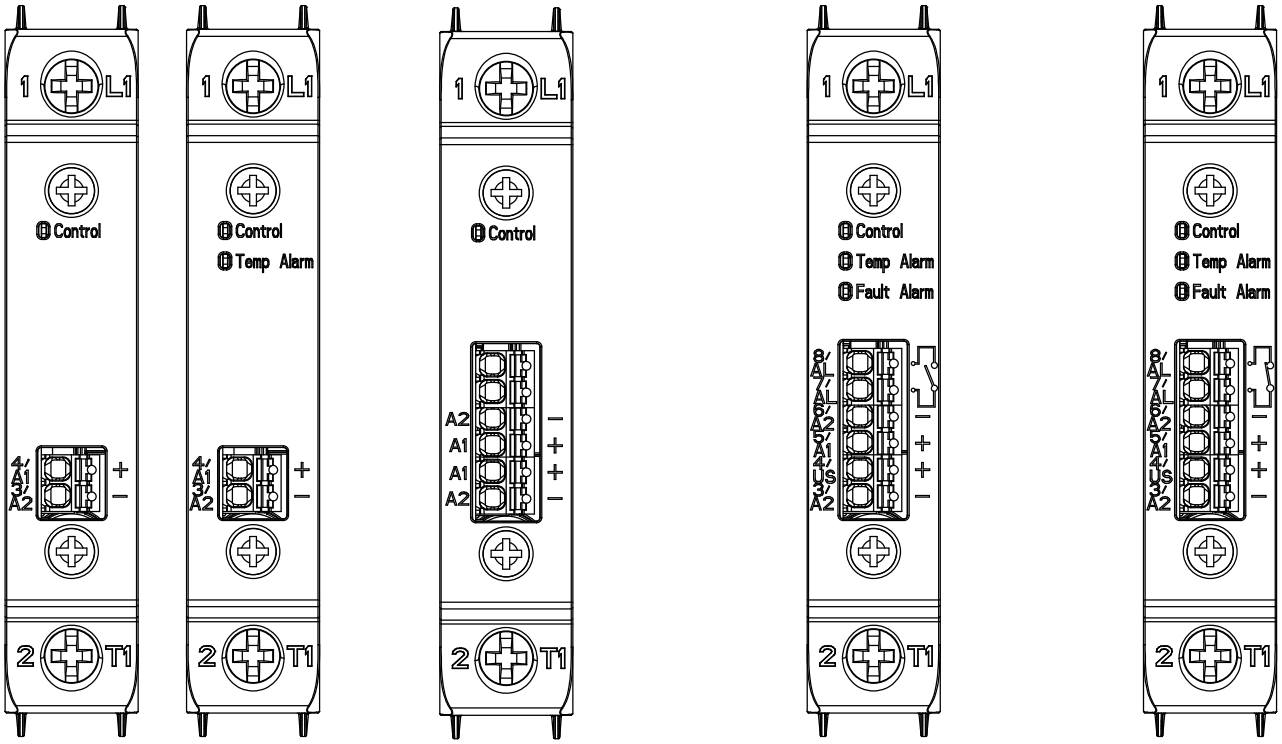

Description of terminal/connector versions with type “D” input			
Power terminals (common to all versions) (Overvoltage Category III)			
Rif.	**Description**	**Notes**	
1/L1	Line Connection		
2/T1	Load Connection		
Signal connector version without options (GRS-H...D-0) (Overvoltage Category II o III)			
3/A2-	GND Control input ON/OFF	Control input ground	
4/A1+	+Vdc control input ON/OFF	Range from 5,1 to 32 Vdc, Imax <9 mA at 32V OFF < 5V Input impedance 500 kΩ	
Signal connector version without options (GRS-H…DD-0) (Overvoltage Category II o III)			
3/A2-	GND Control input ON/OFF	Control input ground	
4/A1+	+Vdc Control input ON/OFF	Range from 5,1 to 32 Vdc, Imax <9 mA at 32V OFF< 5V Input impedance 500 kΩ	
5/A1+			
6/A2-	GND Control inputON/OFF	Control input ground	
Signal connector version with options “1 “ and “2 “ type (GRS-H…D-1/2) (Overvoltage Category II o III)			
3/A2-	GND for power supply and control input ON/OFF	Ground for power supply and control input ON/OFF	
4/Us	+ Vdc power supply	Power supply GRS-H (Range from 6 to 32 V DC, Imax < 14 mA at 32V	
		GRS-H-90..120A-..FAN63: Power supply GRS-H + Fan (Range from 20 to 27 V DC, Imax <150 mA at 24V with Fan active)	
5/A1+	+Vdc control input ON/OFF	Range: ON from 3 to 32Vdc, Imax <0,5 mA at 32V OFF< 1,8V Input impedance 9,45 kΩ	
6/A2-	GND Control input ON/OFF (common to terminal 3/A2-)	Additional connection to be used only as GND for the control signal	
		Version with option 1	Version with option 2
7/AL	Alarm output: - Interrupted load - Line voltage absent - Overtemperature	Solid state N.O. contact Imax =150mA Vmax = 30 V DC/25V AC Z_closed < 1 Ω Z_open > 1 MΩ	Solid state N.C. contact Imax = 50mA Vmax = 30 Vdc/25Vac Z_closed < 15 Ω Z_open > 1 MΩ
8/AL			

Note:
The connections are also representative of 90-120A models

DESCRIPTION OF CONNECTIONS

GRS-H...D-3 **GRS-H...D-5**

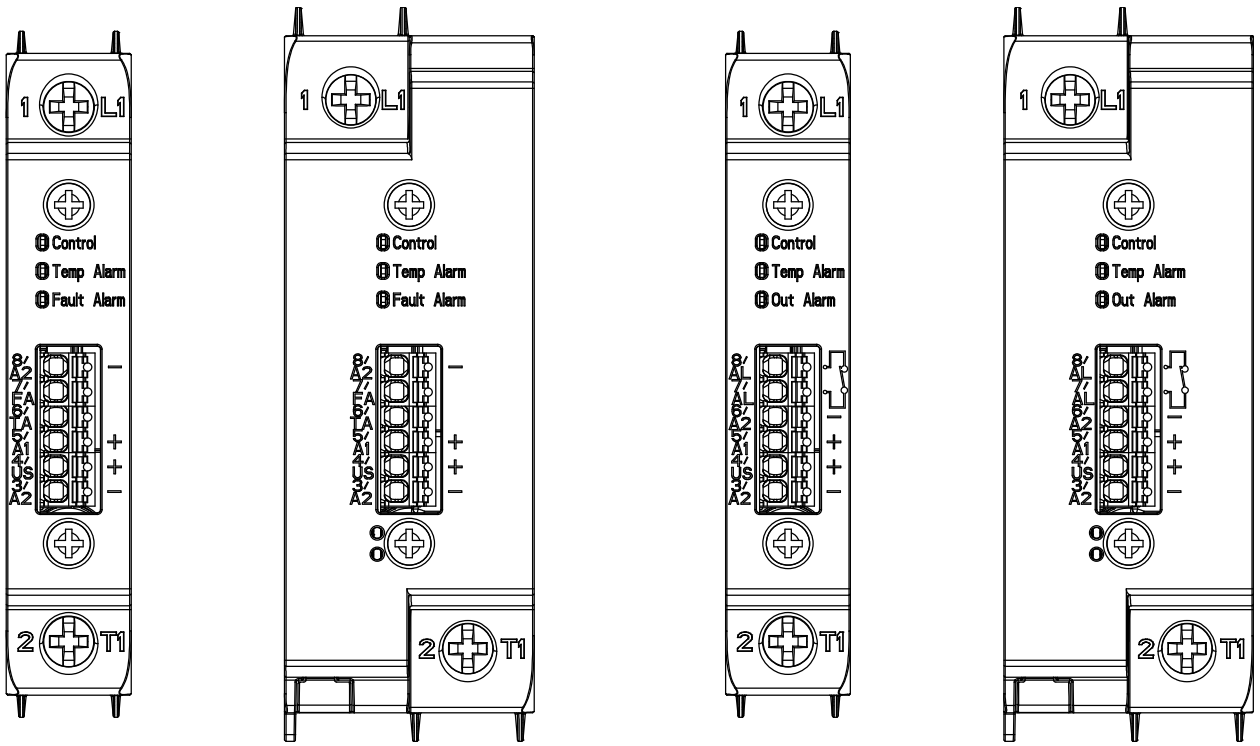

Description of terminal/connector versions with type “D” input		
Signal connector version with option type “3” (GRS-H…D-3) (Overvoltage Category II o III)		
Rif.	**Description**	**Notes**
3/A2-	GND for power supply and control input ON/OFF	Ground for power supply and control input ON/OFF
4/US	+ Vdc power supply	Power supply GRS-H (Range from 10 to 32 Vdc, Imax < 14 mA a 32V)
		GRS-H-90..120A-..FAN63: Power supply GRS-H + Fan (Range from 20 to 27 V DC, Imax <150 mA at 24V with Fan active)
5/A1+	+Vdc control input ON/OFF	Range: ON da 3 a 32Vdc, Imax <0,5 mA a 32V OFF< 1,8V Input impedance 9,45 kΩ
6/TA	Overtemperature alarm output	PNP output normally not active (1) Imax =150mA Vout = + V DC power supply -1V
7/FA	Alarm output: interrupted load or line voltage absent	PNP output normally not active (1) Imax =150mA Vout = + V DC power supply -1V
8/A2-	GND Control input ON/OFF (common to terminal 3/A2-)	Additional connection to be used only as GND for the control signal
Alarm output connector version with type “5” option (GRS-H...A-5) (Overvoltage Category II o III)		
3/A2-	GND for power supply and control input ON/OFF	Ground for power supply and control input ON/OFF
4/Us	+ Vdc power supply	Power supply GRS-H (Range from 6 to 32 V DC, Imax < 14 mA at 32V)
		GRS-H-90..120A-..FAN63: Power supply GRS-H + Fan (Range from 20 to 27 V DC, Imax <150 mA at 24V with Fan active)
5/A1+	+Vdc control input ON/OFF	Range: ON from 3 to 32Vdc, Imax <0,5 mA a 32V OFF< 1,8V Input impedance 9,45 kΩ
6/A2-	GND Control input ON/OFF (common to terminal 3/A2-)	Additional connection to be used only as GND for the control signal
7/AL	Overtemperature alarm output	Solid state N.C. contact Imax = 50mA Vmax = 30 Vdc/25Vac Z_closed < 15 Ω Z_open > 1 MΩ
8/AL		
(1): The normally inactive PNP outputs can be connected to each other and obtain a single alarm output **Note:** The connections are also representative of 90-120A models For terminals and conductors to be used, see the table: “CLAMP AND CONDUCTOR CHARACTERISTICS TABLE” on page 14		

DESCRIPTION OF CONNECTIONS

GRS-H...A-0

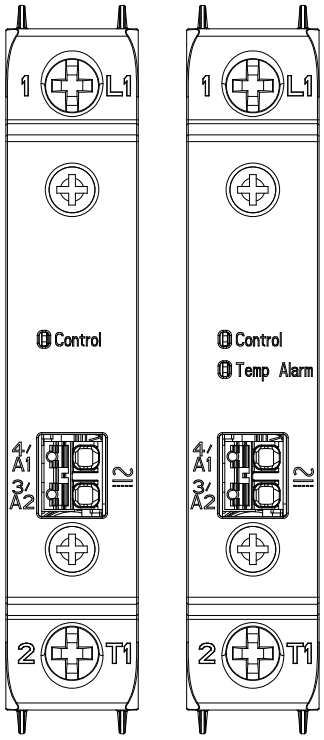

GRS-H...A-5

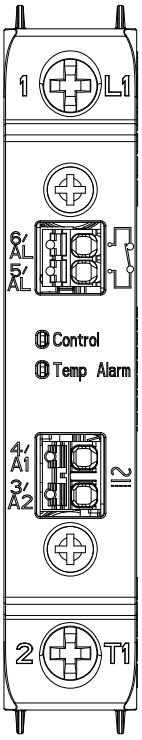

Description of terminal versions with type “A”input		
Power terminals (common to all versions) (Overvoltage Category III)		
Rif.	**Description**	**Notes**
1/L1	Line Connection	
2/T1	Load Connection	
“Control connector” (Overvoltage Category II)		
3/A2	Control input ON/OFF in AC	Vac/Vdc input (Range 20 to 260Vac/Vdc, Imax < 8 mA) Overvoltage Category II
4/A1		
Alarm output connector version with type “5” option (GRS-H...A-5) (Overvoltage Category II o III)		
5/AL	Overtemperature alarm output	Solid state N.C. contact Imax = 150 mA Vmax = 30 Vdc/25Vac Z_closed < 1 Ω Z_open > 1 MΩ)
6AL		
Note: The connections are also representative of 90-120A models For terminals and conductors to be used, see the table: “CLAMP AND CONDUCTOR CHARACTERISTICS TABLE” on page 14		

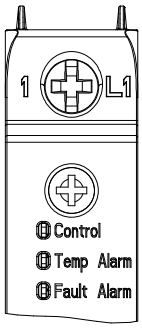

Note:
Control LED is always present,
Temp Alarm and Fault Alarm LEDs are optional

LED STATUS DESCRIPTION

STATUS	LED Control (Green)	LED Temp Alarm (Yellow)	LED Fault Alarm/Out Alarm (Alarm:Red)
SCR OFF, no alarm	OFF	OFF	OFF
SCR ON, no alarm	ON	OFF	OFF
SCR ON, Alarm output active	ON	OFF	ON
Control signal active, SCR forced off for overtemperature protection	OFF	ON	OFF
Control signal active, SCR forced off for overtemperature protection, Alarm output active	OFF	ON	ON
SCR off, Alarm output active for interrupted load (alarm is stored, Status only possible with GRS-H with Type D input and options 1/2/3)	OFF	OFF	ON

TYPE OF OPERATION

Logic voltage output command

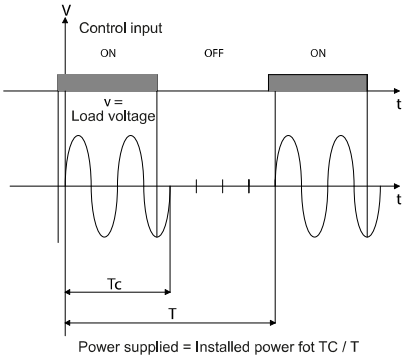

GRS-H thermal protection

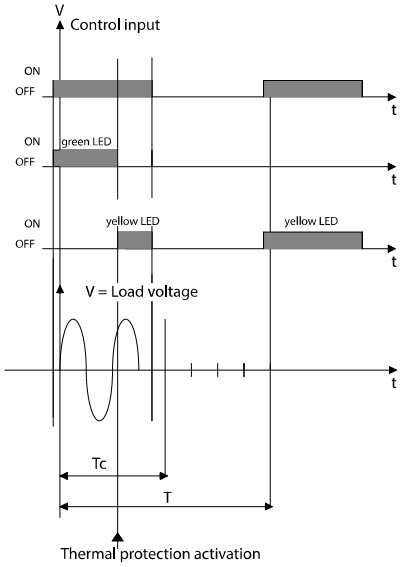

THERMAL ALARM

Models with thermal alarm

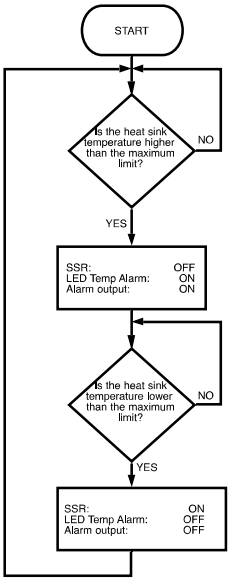

Models with thermal alarm and FAN63 option

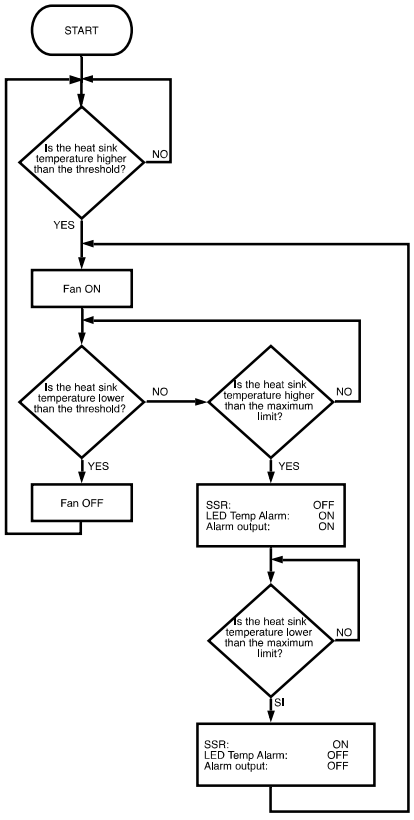

ALARM LOAD INTERRUPTED

GRS-H with V DC command (Control type “D” with options)

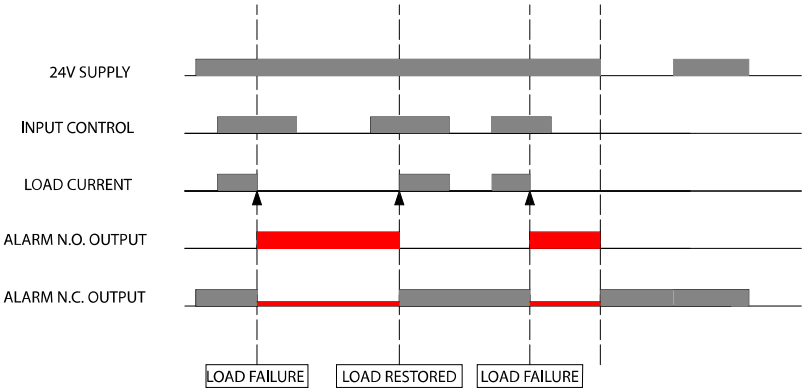

CONNECTION EXAMPLES

Single-phase connection

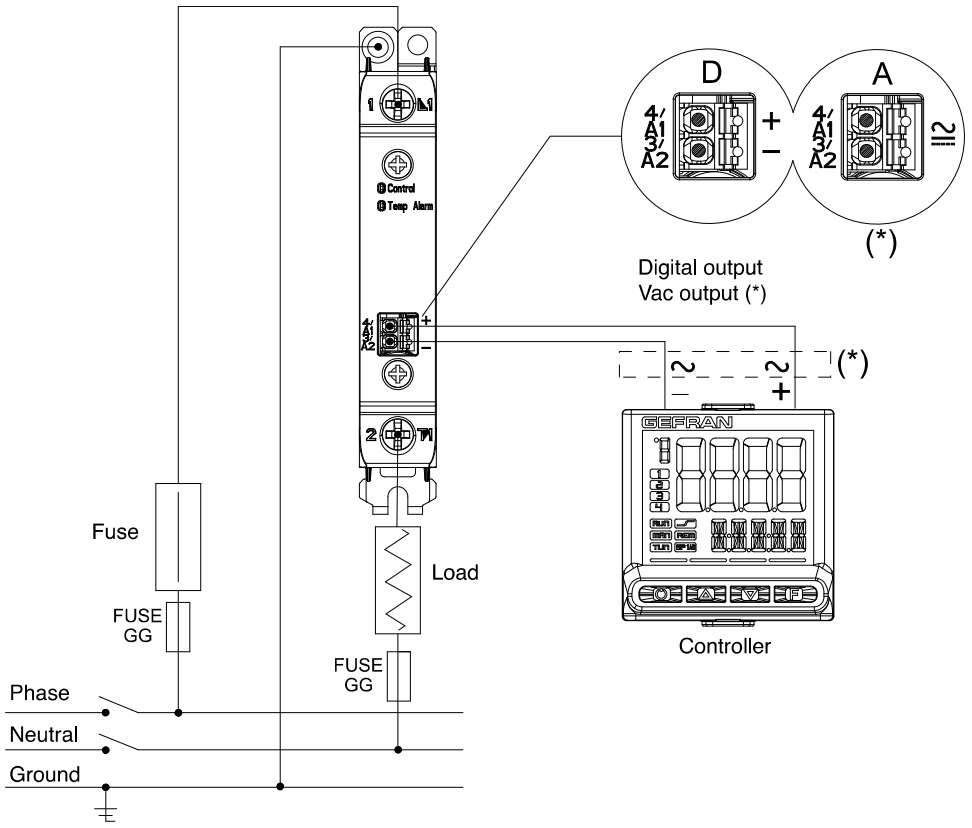

Three-phase Wye connection with neutral

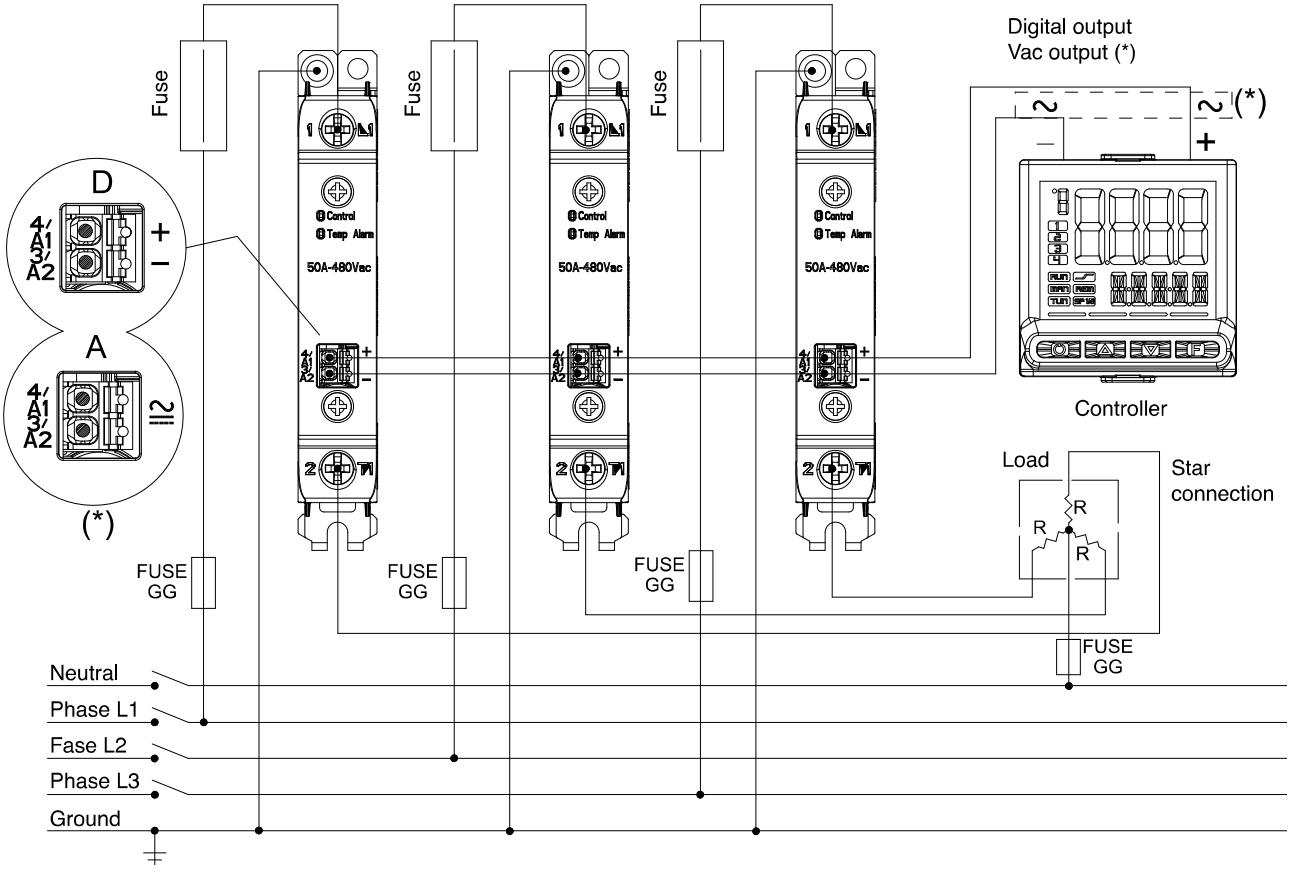

(*) Or relè output with Vac tension
(Uso gra.h with comand input Vac type a)

CONNECTION EXAMPLES

Three-phase Triangle or Star connection without neutral on two phases

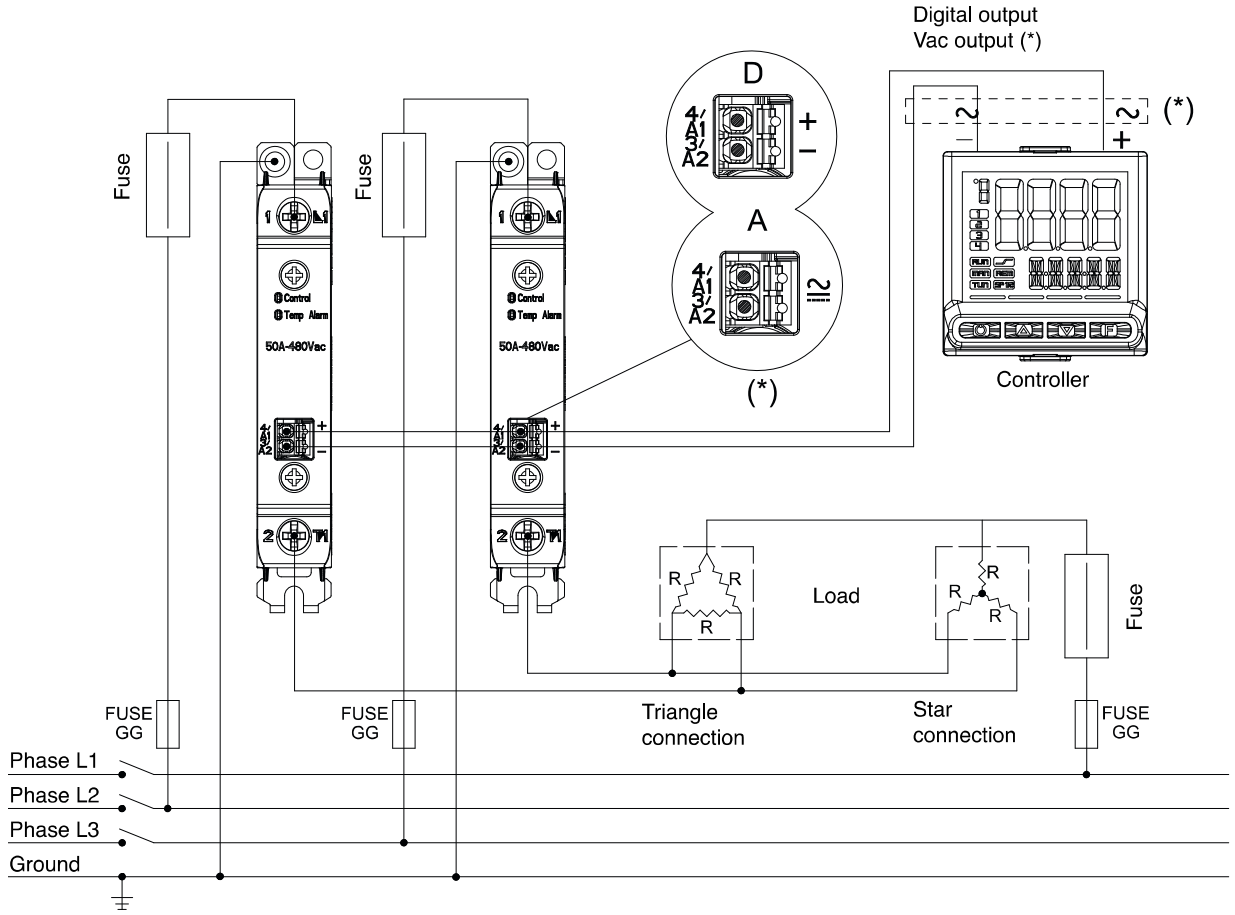

(*) Or relè output with Vac tension
(Use GRS-H with comand input vac type A)

Connection example for GRS-H with VDC ("DD-0" type)

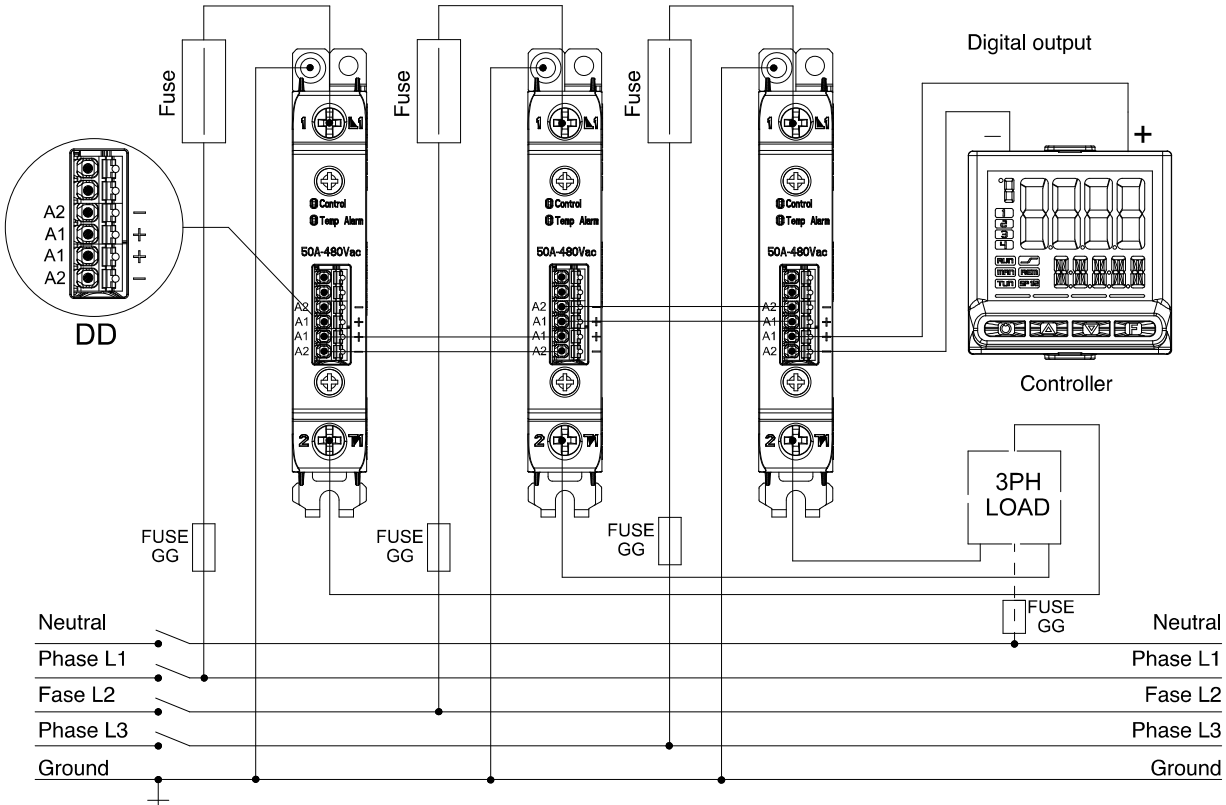

CONNECTION EXAMPLES

Connection example for GRS-H with V DC command with isolated contact alarm output option (Options 1 and 2)

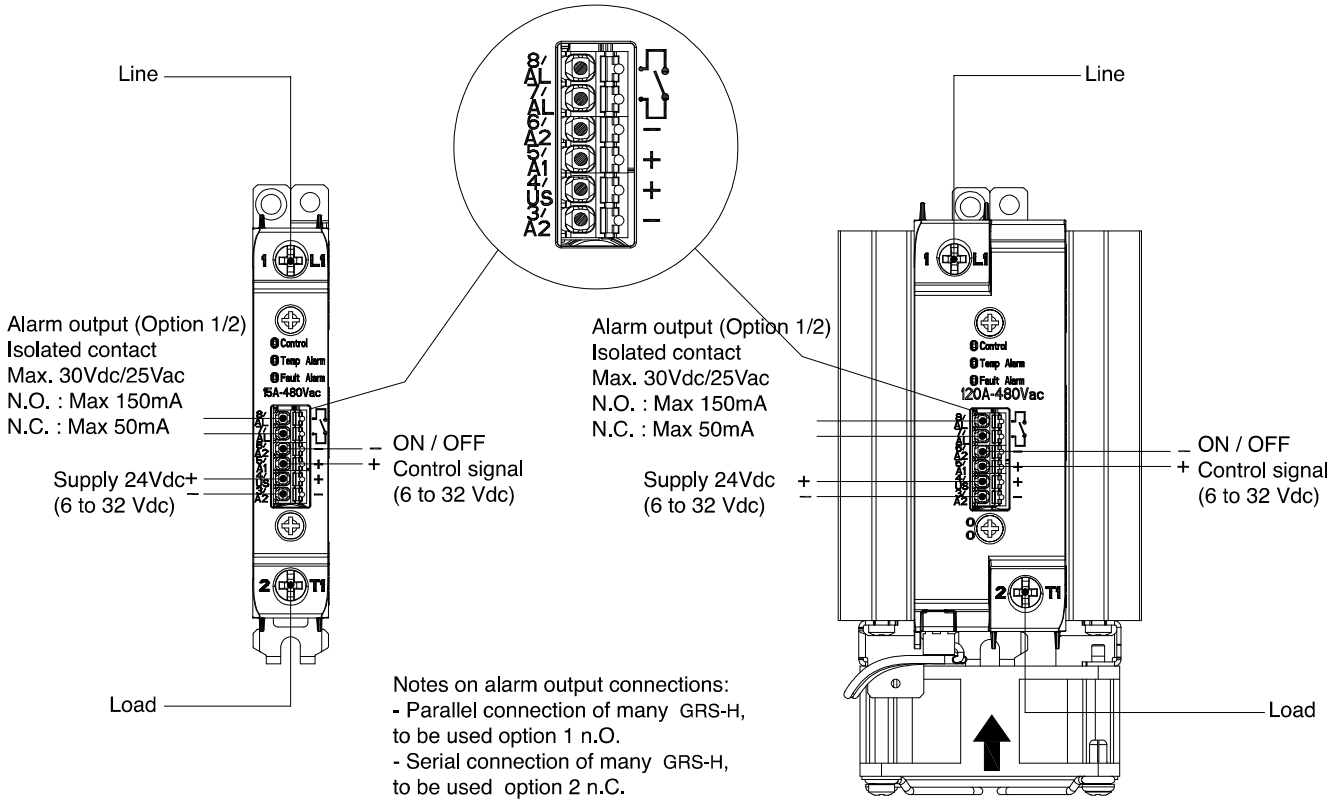

Connection example for GRS-H with V DC command with PNP alarm output option (Option 3)

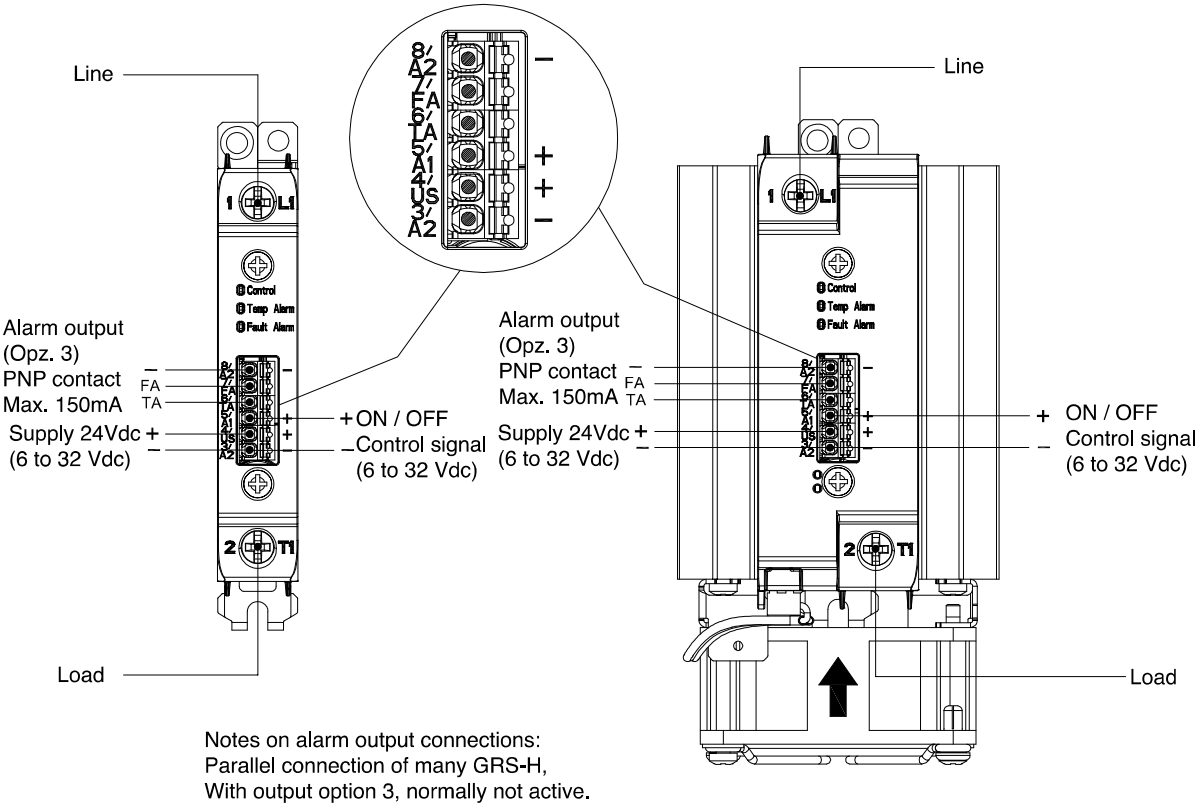

CONNECTION EXAMPLES

Connection example for GRS-H with V DC control with thermal alarm option (Option 5)

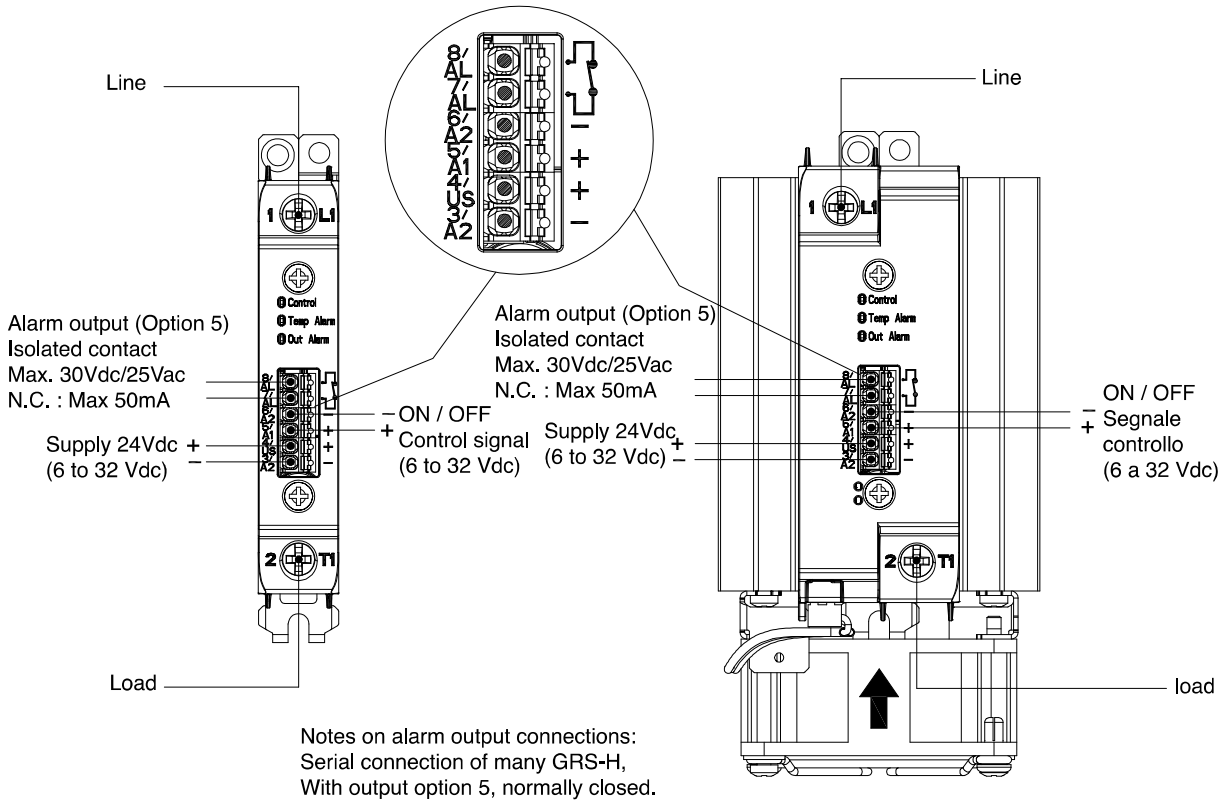

Connection example for GRS-H with V AC control with thermal alarm option (Option 5)

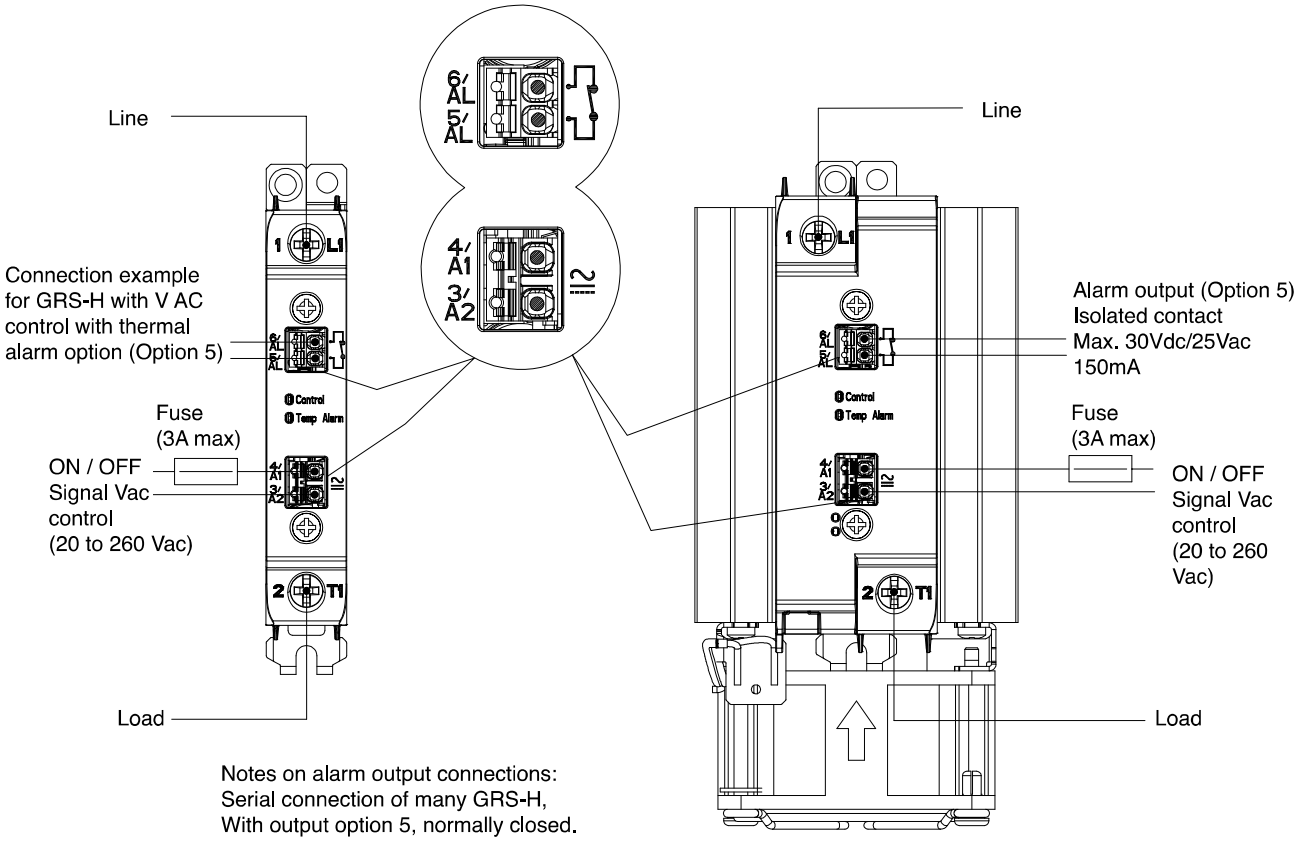

TABLE OF TERMINALS AND CONDUCTORS

POWER TERMINALS			
GRS(-H) Rating current	15-25-30-40-50-60-75		90-120
Wiring type	Rigid / flexible / ferrule conductor		
Contact area (WxD) screw type	9,2 x 8 mm M5		10,5 x 10,7 mm M5
Stripping length	11 mm		13 mm
Minimum allowed section 1 Conductor / 2 Conductors	1 x 0.75 mm2 / 2 x 0.75 mm2		
	1 x 18 AWG / 2 x 18 AWG		
Maximum allowed section 1 Conductor / 2 Conductors	1 x 25 mm2 /2 x 16 mm2	1 x 50 mm2 /2 x 25 mm2	
	1 x 3 AWG /2 x 6 AWG	1 x 1/0 AWG /2 x 3 AWG	
Tightening torque	2,5-3 Nm (22-26,6lb-in)		
Note: Use 75°C (167°F) copper (CU), multi-stranded conductors			

CONTROL/SIGNAL TERMINALS *Rigid / flexible / cable lug conductor cross section*	
1 Conductor section ***2 Conductors section***	1 x 0.2-1.5 mm^2 / 2 x 0.1-0.75 mm^2
	1 x 24-15 AWG 2 x 27-18 AWG
Stripping length / cable lug	1x 8-10 mm 2x 10-12 mm
Note: Use 60/75°C (140/167°F), solid or multi-strand copper (CU) conductors	

GROUND TERMINAL*	
Contact area (WxD) screw type	9 x 9 mm M5
Tightening torque	1,5-2,5 Nm (13.3 lb-in – 22 lb-in)

- (*) The screw terminals are only suitable for on-site wiring connection when the wire is equipped with a tube terminal with eyelet.
  It is possible to make ground connection using a copper bar suitably ground connected and fixed to the heatsink of more GRS-H.
  (WxD) = Width x depth

Nota:
For Canadian end-use applications only, an R/C VZCA/7 (or CSA-approved) surge protector is required to be installed in the end-use as shown below:
- Maximum clamping voltage 800V, for the control input of Type "D"/"DD" devices.
- Maximum clamping voltage 2500V, for control input of "A" type devices.

PROTECTION FUSES

Type 1 and Type 2 coordination are ratings based on the level of protection and resilience provided during a high current fault. Device is designed to protect people and equipment during a short circuit fault,, but the differences between the two levels can be explained as follows:
Type 1 : after a short circuit event it may be too damaged for further use.
Type 2 : after a short circuit event device will still be in working.

Protection co-ordination (Type 2)

Size device	Fuse nominal Current	Model and fuse size (manufacturer Bussmann Div Cooper (UK) Ltd)	Fuse code (descr.)	Fuse holder accessory code (descr.)
15	16	FWC-16A10F 10x38	338470 (FUS-016)	337132 (PF-10x38)
25,25I	25	FWC-25A10F 10x38	338474 (FUS-025)	
30,30I	32	FWC-32A10F 10x38	338483 (FUS-032)	
40	40	FWP-40A14F 14x51	338147 (FUS-040)	337131 (PF-14x51)
50	50	FWP-50A14F 14x51	338079 (FUS-051)	
60	63	FWP-63A22F 22x58	338191 (FUS-063)	337130 (PF-22x58)
75	80	FWP-80A22F 22x58	338199 (FUS-080)	
90	100	FWP100A22F 22x58	338478 (FUS-100)	
120	125	170M1418 000-TN/80	338106 (FUS-100)	337092 (PF-DIN)

Protection co-ordination (Type 1) according to UL 508
The devices are suitable For Use On A Circuit Capable Of Delivering Not More Than 100,000 A rms Symmetrical Amperes, 600 Volts Maximum when Protected by UL Listed fuses with size and class as specified in the table below:

Size device	Fuse Class	Fuse Current Max Size [A]	Prospective short circuit current [kArms]
15, 25 , 30	J	40	100
	CC	30	
40	J	40	
25I		80	
30I		80	
50		80	
60		80	
75		80	
90		125	
120		125	

GG FUSES

An electrical protection device known as a GG FUSE must be used to ensure protection against short-circuit of the electrical cable (see EN 60439-1, paragraph 7.5 Short-circuit protection and short-circuit withstand strength" and 7.6 "Switching devices and components installed in ASSEMBLIES", or the equivalent paragraphs of standard EN 61439-1).

PROTEZIONE CON MCB

Protection co-ordination (Type 2) with Siemens Miniature Circuit Breaker (MCB / Thermal-Magnetic) 5SY4 series, curve A, 1P and 2P						
Current size model (I^2t)	**1P MCB model (MCB Nominal current in A) at 230Vac ***	**Wire cross sectional area (mm^2)**	**Minimum length ***of copper wire conductor (m)**	**2P MCB model (MCB Nominal current in A) at 400Vac ****	**Wire cross sectional area (mm2)**	**Minimum length ***of copper wire conductor (m)**
GRS(-H)-15,25,30,40 (1800 A^2s)	5SY4110-5 (10)	1,0	6,0	5SY4210-5 (10)	1,0	6,0
		1,5	9,0		1,5	10,0
		2,5	14,0		2,5	14,0
	5SY4116-5 (16)	1,0	6,0	5SY4216-5 (16)	1,0	6,0
		1,5	9,0		1,5	10,0
		2,5	14,0		2,5	14,0
		4,0	15,0		4,0	25,0
	5SY4120-5 (20)	1,5	9,0	5SY4220-5 (20)	1,5	10,0
		2,5	15,0		2,5	21,0
		4,0	30,0		4,0	30,0
	5SY4125-5 (25)	2,5	18,0	5SY4225-5 (25)	2,5	18,0
		4,0	30,0		4,0	30,0
	5SY4132-5 (32)	2,5	21,0	5SY4232-5 (32)	2,5	36,0
		4,0	35,0		-	-
GRS(-H)-**25I**, **30I**, 50, 60,75 (12800 A^2s)	For MCBs smaller than those indicated in the lines below, there are no section and length constraints.					
	5SY4132-5 (32)	2,5	2,0	5SY4232-5 (32)	2,5	2,0
		4,0	4,0		4,0	4,0
		6,0	7,0		6,0	7,0
	5SY4140-5 (40)	4,0	4,0	5SY4240-5 (40)	4,0	4,0
		6,0	7,0		6,0	7,0
		10,0	10,0		10,0	10,0
	5SY4150-5 (50)	6,0	7,0	5SY4250-5 (50)	6,0	7,0
		10,0	10,0		10,0	10,0
		16,0	18,0		16,0	18,0
	5SY4163-5 (63)	6,0	7,0	5SY4263-5 (63)	6,0	7,0
		10,0	10,0		10,0	10,0
		16,0	18,0		16,0	18,0
GRS(-H)-90,120 (11250 A^2s)	For MCBs smaller than those indicated in the lines below, there are no section and length constraints					
	5SY4132-5 (32)	2,5	2,0	5SY4232-5 (32)	2,5	2,0
		4,0	4,0		4,0	4,0
		6,0	7,0		6,0	7,0
	5SY4140-5 (40)	4,0	4,0	5SY4240-5 (40)	4,0	4,0
		6,0	7,0		6,0	7,0
		10,0	10,0		10,0	10,0
	5SY4150-5 (50)	6,0	7,0	5SY4250-5 (50)	6,0	7,0
		10,0	10,0		10,0	10,0
		16,0	18,0		16,0	18,0
	5SY4163-5 (63)	6,0	7,0	5SY4263-5 (63)	6,0	7,0
		10,0	10,0		10,0	10,0
		16,0	18,0		16,0	18,0

* The sizing is valid for a 230Vac phase-neutral line with an assumed short-circuit current of 2,5KA
** The sizing is valid for a 400Vac phase-to-phase line with an assumed short-circuit current of 5KA
*** Between MCB and Load plus return path which goes back to the lines/neutral

Example, for a GRS-H-50- ..., with line voltage of 230Vac, controlled load of 45 A nominal, with a section of 6mm2 of cable, an MCB 5SY4150-5 (50 A) the minimum length of the cables is 7m (cable length is intended between MCB and load, including return).

FANS (for 90A/120A models only)

Model	Code	Type	Supply
90A FAN60	363484	230 Vac 60mm x 60mm x 30mm for 90A models	Separate power supply
120A FAN60	363011	230Vac 80mm x 80mm x 38 mm for 120A models	Separate power supply
90A FAN61	363485	115Vac 60mm x 60mm x 30 mm for 90A models	Separate power supply
120A FAN61	363003	115Vac 80mm x 80mm x 38 mm for 120A models	Separate power supply
FAN62	363037	24 Vdc 60mm x 60mm x 25mm	Separate power supply
FAN63	363037	24 Vdc 60mm x 60mm x 25mm	Internally powered by GRS-H

PERIODIC CLEANING

Every 6-12 months (depending on dust in the place where it is installed), blow a jet of compressed air downward through the cooling heatsink (on the opposite side of the fan).
In this way both the heat sink and the cooling fan are cleaned.

IN THE EVENT OF OVERTEMPERATURE ALARM

If periodic cleaning does not eliminate the problem, perform the following operations:
1. Disconnect the fan cables from the terminal block (if present) or disconnect the fan connector from the GRS-H (FAN63).
2. Unscrew the screws securing the fan to the support brackets
3. Check the condition of the fan, clean it or replace it
4. Reassemble the fan

FANS (for 90A/120A models only)

Caution: make sure that the arrow showing the direction of the air flow on the fan is pointing toward the heat sink

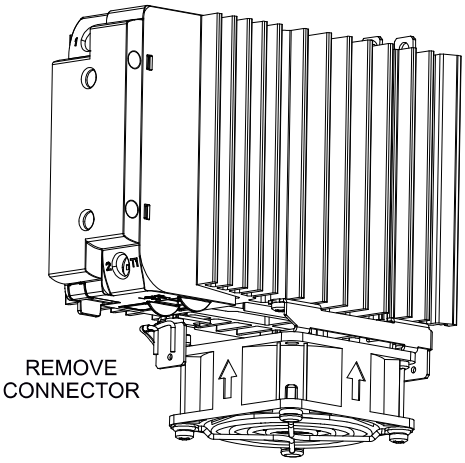

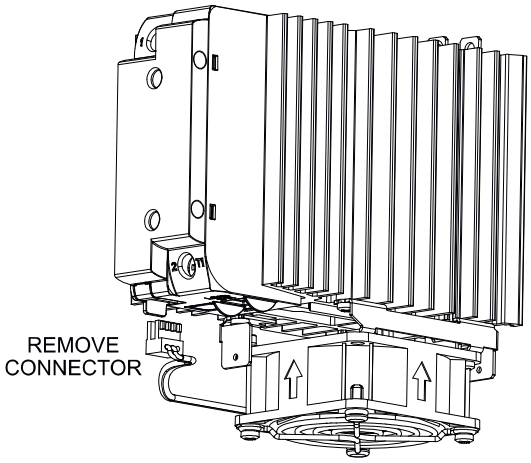

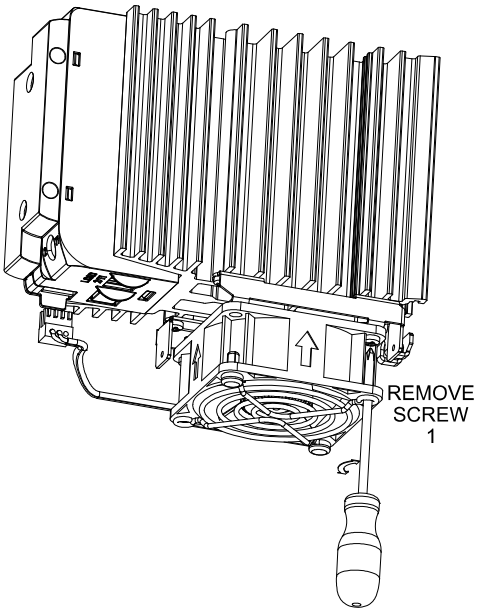

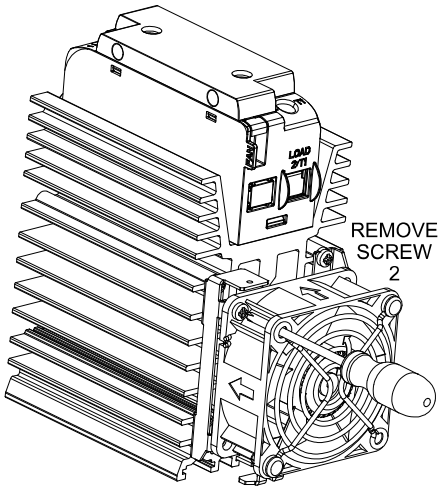

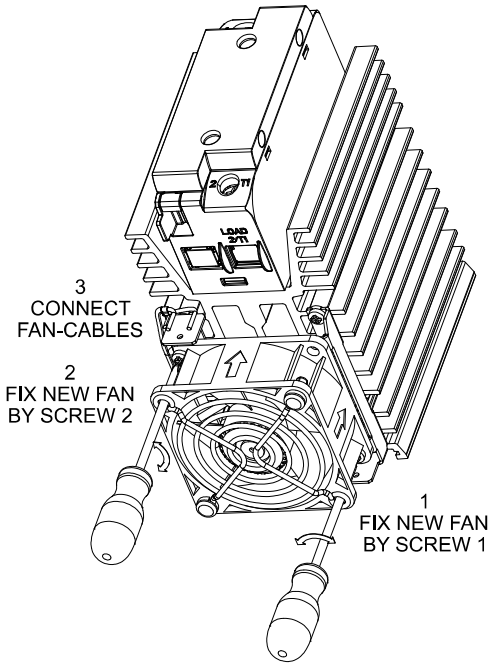

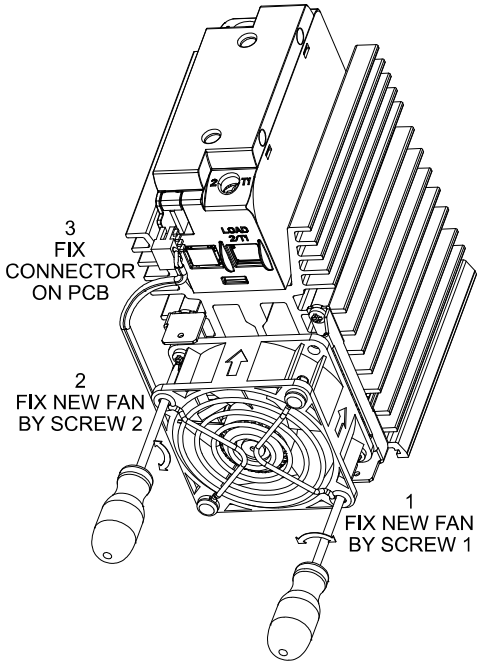

Use a Phillips screwdriver with a max. diameter of 3.5mm

DERATING CURVES (UL508)

Rated current curves as a function of ambient temperature (minimum distance between GRS-H of 20mm).

DERATING CURVES GRS-H 15 ÷ 30A

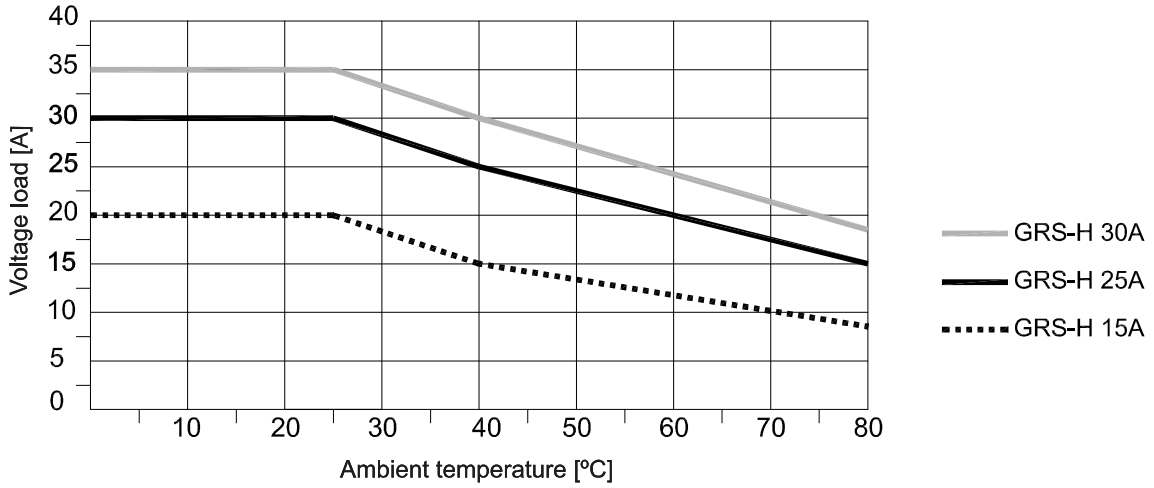

DERATING CURVES GRS-H 40 ÷ 60A

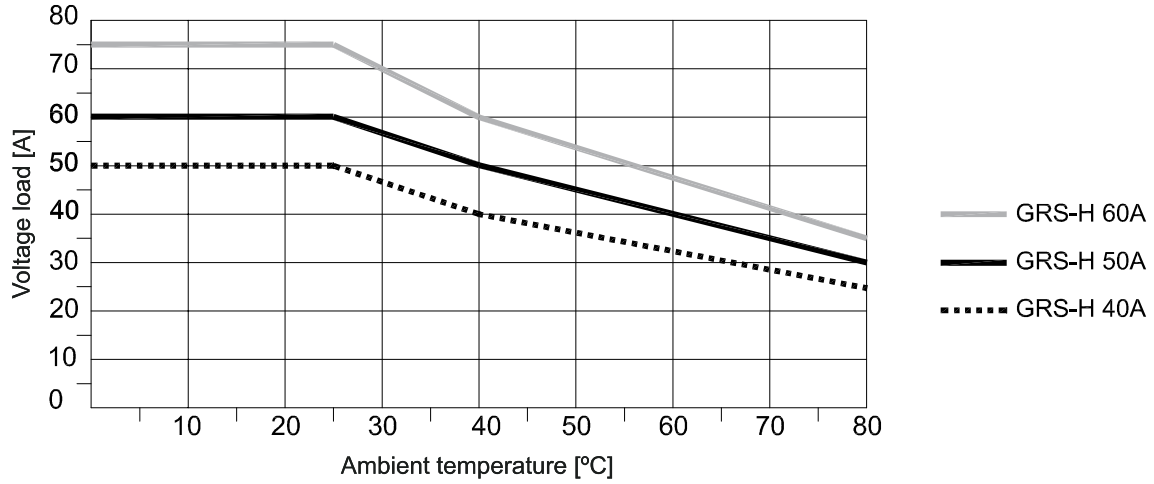

DERATING CURVES GRS-H 75 ÷ 120A

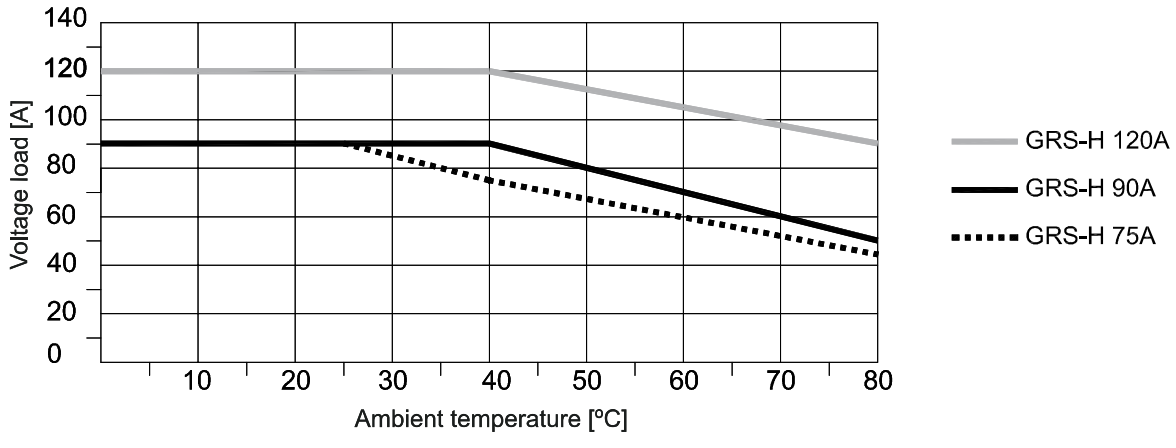

N.B: The curves of the GRS-H 90/120 refer to the device complete with a working specified fan.

DOWNGRADE WITH INSTALLATION DISTANCE

Rated current curves as a function of the horizontal distance between the GRS-Hs (ambient temperature 40 °C).

DERATING CURVES GRS-H 15 ÷ 30A

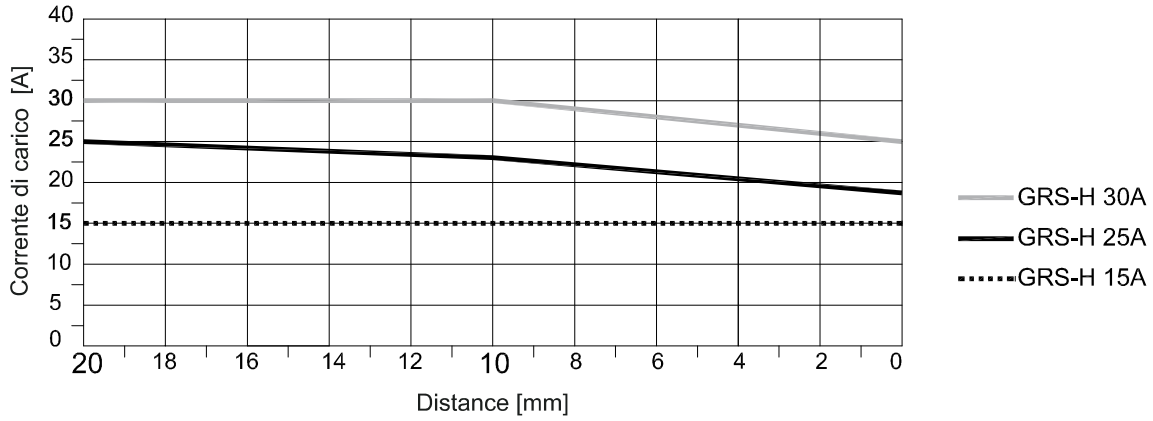

DERATING CURVES GRS-H 40 ÷ 60A

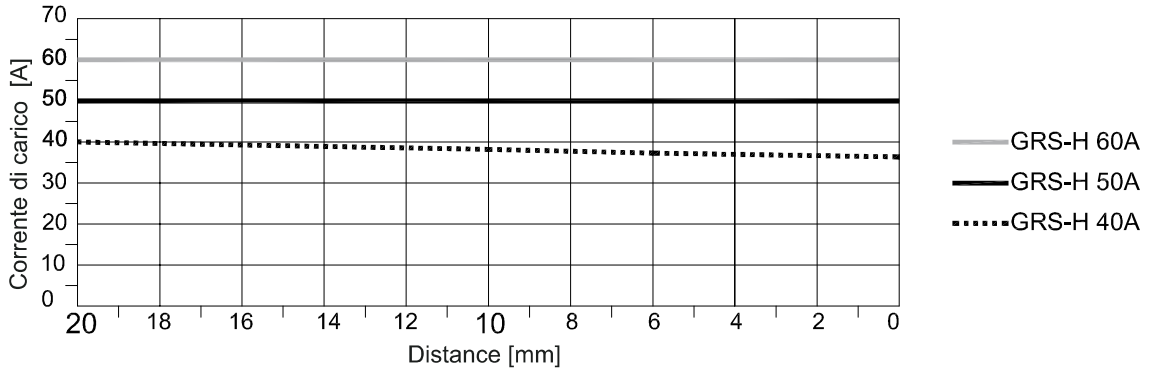

DERATING CURVES GRS-H 75 ÷ 120A

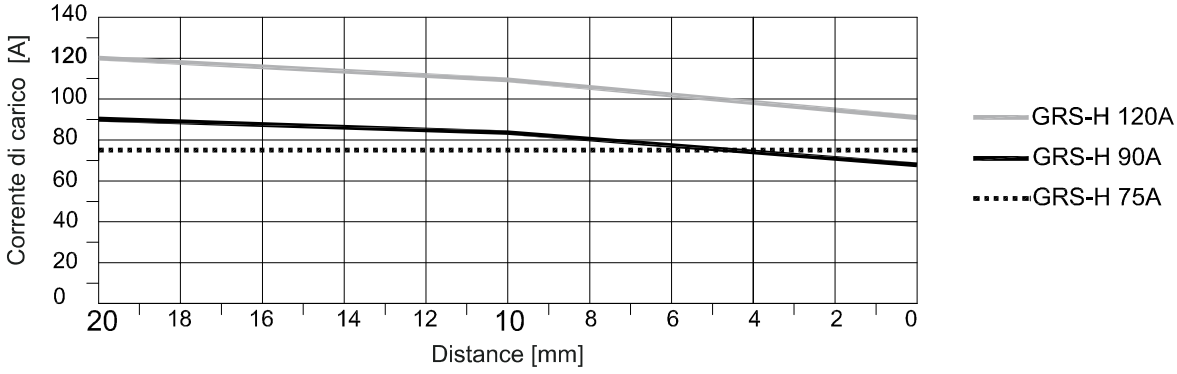

ORDER CODE

GRS-H - [ ] - [ ] - [ ] - [ ] - [ ] - [0] - [0]

Rated current	
15Aac	**15**
25Aac	**25**
25Aac I2t++	**25I**
30Aac	**30**
30Aac I2t++	**30I**
40Aac	**40**
50Aac	**50**
60Aac	**60**
75Aac	**75**
90Aac	**90**
120Aac	**120**

Rated voltage	
480Vac	**48**
600Vac	**60**

Input type	
6 ... 32 Vdc	**D**
6..32 Vdc Double Input	**DD**
20 ... 260 Vac / Vdc	**A**

Future developments	
0	Nessuna

Control terminal	
0	Push In

FANS	
versions with rated current from 15A to 75A	
0	Not required
versions with rated current from 90A to 120A	
0	Without fan with bigger heatsink(90A only)
FAN60	230Vac 60x60x30 mm for 90A models
	230Vac 80x80x38 mm for 120A models
FAN61	115Vac 60x60x30 mm for 90A models
	115Vac 80x80x38 mm for 120A models
FAN62	24Vdc 60x60x25 mm
FAN63	24Vdc 60x60x25 mm smart powered by the module (*2)

OPTIONS	
0	None
1	Thermal alarm and load interrupted Insulated contact (NO) (1)
2	Thermal alarm and load interrupted Insulated contact (NC) (1)
3	Thermal alarm and load interrupted Digital output PNP (NO) (1)
5	Thermal alarm Insulated contact (NC)

Notes:
(1) Available only for versions with type input D

(2) Available only for versions with type input D and Options (D-1, D-2, D-3, D-5).
This option allows you to turn on the fan only when necessary, increasing its useful life.

WARNINGS

WARNING: THIS SYMBOL INDICATES DANGER.

Read the following warnings before installing, connecting or using the device:

- follow instructions precisely when connecting the device.
- always use cables that are suitable for the voltage and current levels indicated in the technical specifications.
- In applications with risk of damage to persons, machines or materials, you MUST install auxiliary alarm devices.
- It is advisable to verify frequently that the alarm device is functional even during the normal operation of the equipment.
- DO NOT operate the device in rooms with dangerous (inflammable or explosive) atmosphere.
- During continuous operation, the heat sink can reach up to 100°C, and stays at a high temperature even after the device is turned off due to thermal inertia; therefore, DO NOT touch it and avoid contact with electrical wires.
- do not work on the power part without first disconnecting electrical power to the panel.
- do not remove the cover when the device is powered!

Installation:

- correctly ground the device using the specific terminal.
- power supply lines must be separated from device input and output lines; always check that the supply voltage matches the voltage indicated on the device label.
- avoid dust, humidity, corrosive gases and heat sources.
- respect the installation distances between one device and another (to allow for dissipation of generated heat).
- to keep air in movement, we advise you to install a fan near the GRS-H group in the electrical panel containing the GRS-H.
- respect the indicated dissipation curves

Maintenance:

at regular intervals, check operation of the cooling fans and clean all air ventilation filters.

- repairs must be done out only by trained and specialized personnel. Cut power to the device before accessing internal parts.
- do not clean the box with solvents derived from hydrocarbons (trichloroethylene, gasoline, etc.). Using such solvents will compromise the device's mechanical reliability. Use a clean cloth moistened with ethyl alcohol or water to clean external parts in plastic.

Service:

GEFRAN has a service department. The warranty excludes defects caused by any use not conforming to these instructions.

GEFRAN spa reserves the right to make aesthetic or functional changes at any time and without notice.

CE	This device conforms to European Union Directive 2014/30/EU and 2014/35/EU as amended with reference to generic standards: **EN 61000-6-2** (iammunity in industrial environment) **EN 61000-6-4** (emission in industrial environment) **- EN 61010-1** (safety regulations).
c UL us LISTED	cULus listed, Conformity UL508 **-** File: E243386
EAC	EAC, Conformity TC RU C-IT.АЛ32.B.00422
SCCR RMS SYM 100KA / 600V	Short Circuit Current Rating 100KA / 600V according to UL 508