

Operating instructions

Series 09 – I/O Outdoor Keypad

Operating instructions and safety instructions

Operating instructions and safety instructions



Project	S09, 1707 hardwired
Document Number	1707900703
Document Description	Operating and safety instructions for the hardwired keypads

EAO Automotive GmbH & Co. KG

Richard-Wagner-Straße 3

08209 Auerbach/Vogtl.

Change History				
Version	**Change Description**	**Status**	**Author**	**Date**
01	initial	intial	MAR	02.06.2021
01	initial	reviewed	ESF	13.08.2021

Referenced Documents				
Reference	**Document Number**	**Version**	**Author**	**Date**
1707 product information	**1707940001**	**02**	**EBJ**	**12.05.2021**
Series 09 CAN Keypads I/O - CE-Certification - Compliancy of EAO Products	**-**	**-**	**HDI**	**July,15, 2021**

Related Products	Version
Series 09 I/O Outdoor Keypad	**01S**

Table of contents

1. Safety warnings....7
1.1 Intended use....7
2. Proper environment....8
3. General description....8
4. Technical specification....10
5. Scope of delivery....11
6. Storage....11
7. Mechanical installation/mounting....12
7.1 Installation in a panel by means of retaining clamps (retaining clamp version)....12
7.2 Installation in a panel with self-locking nuts (screw-in version)....13
7.2.1 Mounting sequence....13
7.3 Installation of the symbol inserts....14
7.4 Use inside closed vehicles....15
8. Electrical installation and pinning....16
9. Cleaning....18
10. Optional accessories....18
11. Liability for quality defects....18
12. Service, repair....19
13. Decommissioning, disposal....19
14. Declaration of Conformity....19

List of abbreviations and units

DIN	Deutsches Institut für Normung / German institute for standardization
EN	European standard
EU	European Union
HMI	Human-Machine-Interface
IP	International Protection
ISO	International Organization for Standardization
LED	Light emitting diode
MOT	Ministry of Transport
OEM	Original Equipment Manufacturer
VDA	Verband der Automobilindustrie / German Association of the automotive industry

Used symbols



Caution!

Indicates a hazardous situation which, if not avoided, may result in a minor or moderate injury



Attention

Describes information on installation which, if ignored, can lead to malfunctions



Note

Indicates a situation which, if not avoided, may result in property damage

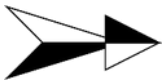

Indicates an executive activity



Indicates an application tip

1. Safety warnings

The safe system handling requires knowledge of the operating instructions.

	**Caution!** Connect the power supply in accordance with the safety regulations for electrical equipment. – Risk of injury – Damage to the keypad

	**Note** Avoid shocks and impacts to the keypad during installation – Damage to or destruction of the keypad The supply voltage must not exceed the specified limit. – Damage to or destruction of the keypad Protect the connector from damages – Damage to or destruction of the keypad

1.1 Intended use

The modules were developed for applications in vehicles with MOT approval within the EU. The robust, modular design with a protection degree of up to IP6K7 and the possibility of customer-specific adaptations and the arrangement of keypad symbols are facts that make the devices the best choice for use in heavy-duty and special vehicles.

The keypads may only be operated within the parameters specified in the technical data.

The keypads must be used in such a way that no persons are endangered, or machines or other equipment become damaged in the event of failure or malfunction.

Commissioning must be carried out by qualified personnel.

2. Proper environment

See 4 Technical specification.

	**Note** If possible, avoid abrupt changes in the operating temperature of the keypad, cable and connector. – Damage to the keypad, connector

	**Caution!** Do not operate the keypad in: – Potentially explosive atmospheres – Applications where the keypad and connector are completely or partly submerged for extended periods of time – Situations in which the keypad and connector are subjected to harsh external shocks and impacts – Do not use for remaining in final customer installations due to validation not completed – Risk of injury – Damage to the keypad, connector



The design of the keyboard (keys can still be pressed) means that keys are protected from freezing as long as the keys remain accessible and can be pressed. This means that the keyboard can also be used in snow and ice.

3. General description

Series 09 Rugged Keypads offer high reliability: The robust, modular design with protection degrees of up to IP6K7 and the possibility of customer specific adaptations and the arrangement of symbol inserts predestine the devices for use in heavy-duty and special vehicles. The modules are as well designed for ECE certification.

Harsh environmental conditions and low back panel depth require a robust and compact product design. In addition, the control and signalling devices must be precisely configurable both mechanically and electronically for the respective application. The high-quality Rugged Keypad meets these requirements with a cutting-edge system integration.

Typical applications

Special vehicles such as fire engines, road sweepers, cleaning vehicles, dustcarts, snow clearing vehicles and snow groomers. Heavy-duty vehicles such as construction and agricultural vehicles

Advantages

- Red halo ring illumination
- Robust, ergonomic and innovative design with a protection degree of up to IP6K7 (front: IP6K7; back: IP20 without plugged connector). Protection degree for assembled situation in responsibility of customer application.
- Interchangeable symbols according to ISO 7000 or customer-specific symbols

Robust and innovative design

The design of the Rugged Keypads is characterised by a robust and innovative construction. The control and signalling devices, which are protected up to IP6K7, function reliably at an operating temperature range from – 40 °C to + 85 °C. The low assembly depth and robust clip-in or screw-in mounting allow a flexible and easy installation, either vertically or horizontally. The high-quality devices also offer an excellent haptic and, thanks to the bright single colour LED halo and single colour LED symbol illumination, are clearly visible in daylight and at night. An attractive halo button illumination is integrated as standard.

The customisable illumination provides the operator with excellent visual feedback and is combined with a unique, contemporary design.

Durability

The series 09 keypad modules are produced in our automotive competence centre located in Germany. This allows us to apply our many years of comprehensive experience as an original equipment manufacturer (OEM) in the automotive industry to the heavy-duty and special vehicles markets. At the same time, this offers EAO customers high quality, durable products and services. The development and production process are aligned and executed according to automotive standards. This requirement ensures EAO high quality products and solutions.

Designed for ECE applications

The robust control units with illumination are ideally suited for use in heavy-duty and special vehicle applications.

4. Technical specification

Validation ongoing and not completed:

Mechanical characteristics

- Actuation force: 6,5 N
- Overload force: 250 N
- Service life – Rugged Keypad: up to 1 million cycles of operation

Electrical characteristics

- Operating voltage range: 8-18 VDC (12 V variante)
  18-32 VDC (24 V variante)
- Maximal switching current: 30 mA

Illumination

- LED symbol illumination – colour: white LED
- LED halo ring illumination – colour: red LED

Symbols

- Symbols in accordance with ISO 7000
- Customer-specific symbols on request

Connections/interfaces

- Connector: WUERTH WR-MRC3 – 16 pole, male
- Interface: hardwired interface with separate lines for each halo Ring and a common symbol illumination; Switching systems are available with resistors in series and parallel to the switching contact (Namur) or without these resistors

Ambient conditions (validation not yet completed)

- Operating temperature: -40 °C … +85 °C
- Storage temperature: -40 °C … +85 °C

Protection degree

IP6K7 protection (front: IP6K7; back: IP20 without plugged connector). Protection degree for assembled situation in responsibility of customer application.



Attention

The protection degree of up to IP6K7 to be achieved depends on the front panel and type of mounting and must be ensured by the customer.

5. Scope of delivery

1 Rugged CAN keypad, with WR-MPC3 – 16 pole connector

Mounting material, depending on version

- Retaining clamp version: 6 retaining clamps graduated according to mounting panel thickness for 1 mm – 4 mm
- Screw-in version: 4 nuts each with washers and spacers and 1 sleeve

	**Attention** For symbol inserts: quantity according to order, separate scope of delivery.

6. Storage

See 4 Technical specification.

	**Note** If possible, avoid abrupt changes in the storage temperature of the keypad cable and connector. – Damage to the keypad, cable or connector Do not expose the open contacts of the unprotected connector to condensing air humidity. – Damage to the keypad and connector

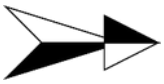

Check the delivery immediately after unpacking regarding completeness and transport damages.

If any damage or incompleteness is found, please contact the supplier immediately.

Optional accessories can be found in the annex 10 Optional accessories.

7. Mechanical installation/mounting

2 mounting versions are available: Installation in a panel by means of retaining clamps (retaining clamp version) or screws (screw-in version).

7.1 Installation in a panel by means of retaining clamps (retaining clamp version)

See drawing “1707 product information (drawing no. 1707940001)”.

If the keypad is mounted or dismounted several times, new retaining clamps must be used each time to prevent settling effects. To change the retaining clamps, press the clamp flat on the underside, then you can push out and dismount the retaining clamp.

The marking of the retaining clamp for the respective front panel thickness is imprinted as number 1 to 4 on the clamp, which is also visible when mounted. The number 1 on the retaining clamp means that it is suitable for a front panel thickness of 1mm. A mixed use of different types of retaining clamps in a keypad is not permitted.

The keypad shall be pressed evenly into the panel of the customers application, with the mounted retaining clamps, while tilting should be avoided. Press evenly on the housing and not on the buttons.

	**Note** Damage to the buttons

The plug-in connection must be established with a suitable connector. The plug-in connection can alternatively be established before or after mounting the keypad into the panel.

The keypad is automatically centred to the panel by the 6 retaining clamps, i.e. the exact positioning of the keypad depends on the accuracy and size of the installation opening.

7.2 Installation in a panel with self-locking nuts (screw-in version)

See drawing “1707 product information”.

If the keypad is mounted or dismounted several times, new self-locking nuts must be used each time.



Caution!

Exceeding the maximum permissible torque inevitably leads to the destruction of the keypad. The keypad might be no longer tight nor leak proof in this case.

Incorrect mounting of the keypad, e.g. incorrect number of rubber washers or without washers (see 7.2.1 Mounting sequence), may result in damages to the keypad.

- Risk of injury
- Damage to the keypad
- Electric shock

7.2.1 Mounting sequence

First, the accurate number of rubber washers need to be mounted according to the front panel thickness. No rubber washers are necessary for a front panel thickness of 1 mm. Use 1 rubber washer per screw bolt for a front panel thickness of 2 mm, use 2 rubber washers per screw bolt for a front panel thickness of 3 mm and use 3 rubber washers per screw bolt for a front panel thickness of 4 mm. Since these have a slightly smaller inner diameter, they clamp lightly on the thread of the bolt to make it more difficult for the washers to fall off. Afterwards, the keypad must be installed in the front panel, of the customer application. The sleeve can be installed rotated by 180° in each case. Afterwards, the 4 washers have to be installed over the screw bolts and fixed with the nuts. The correct tightening torque is defined in the 1707 product information and must be observed! The last assembly step is to connect the plug connector.

The keypad of the screw-in version must be aligned manually to the panel. The Keypad will not be automatic centered. In the next assembly step the keypad can be slightly pushed into the mounting panel (depending on the opening size of the panel).



Caution!

For both versions, make sure that the opening for pressure and humidity compensation on the underside of the keypad is not blocked, damaged or covered during installation and afterwards.

– Damage to the keypad

7.3 Installation of the symbol inserts

The symbol inserts can be changed in a panel both in the installed and in the non-installed state of the keypad.

Each symbol insert can be installed rotated in a 90° grid. When mounting the symbol inserts, make sure that the position of the symbols has the desired orientation towards the keypad. The symbol inserts have a mechanical coding to the housing of the keypad. A slight twisting of the symbol inserts to the keypad is technically possible and does not constitute a defect.

The symbol inserts must be mounted / dismounted under the edge of the housing around the insert using a tool without sharp edges (similar to mounting a vehicle tyre on a rim). The insert tool (article number: 09-0A00.0001), which is available as an accessory, is best suited for this. There should be no visible gap between the housing of the keypad and the symbol insert after installation, because dirt may penetrate here during operation and may negatively influence the lighting function of the keypad.



Caution!

When mounting and dismounting the symbol inserts, make sure that the housing is not damaged. The silicone of the housing must not be pierced, otherwise the protection degree of the keypad is not fulfilled. Similarly, the coating of the housing must not be damaged, otherwise the chemical resistance of the keypad is no longer guaranteed.

– Damage to the keypad like cracks to the soft part of the keypad
– Loss of tightness of the keypad

It must be always ensured that the symbol inserts are mounted in the correct position.

– Risk of injury



Note

When changing the symbol inserts, make sure that there are no liquids or impurities between the housing and the symbol insert. These would negatively affect the illumination of the symbols.

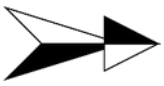

When using the version for snap-in mounting in a mounting panel, you need retaining clamps.

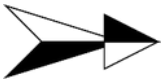

When using the version for screw-in mounting in a mounting panel, you need the sleeve, nuts, washers and spacers to bridge the distance between keypad and sleeve in the thickness of the mounting panel.

Do not forget the spacers during mounting. Only hand-tighten the self-locking nuts (see also 1707 product information).

– Damage to the keypad and/ or sleeve



Note

Only use original mounting material and optional accessories.

– Damage to the keypad

7.4 Use inside closed vehicles

Due to the product is designed for outdoor applications and not for use in closed vehicle interior, odor testing according to odor testing specifications like VDA270 is in customer's responsibility. The test should be performed to customer application needs.

8. Electrical installation and pinning

Electrical installation shall only be done when the system is under no power.

Connection of the keypad module is realized with the Wuerth WR-MPC3 16 pin female connector DT04-6P which is mounted on the PCB.

	**Caution!** The customer application electrical system must be equipped with an overvoltage protection like a sufficiently selected suppressor diode to clip possible incoming overvoltage peaks before they arrive at the keypad according to DIN EN 16750-2 (Load Dump Test B). – Damage to the keypad

Please refer to „1707 product information”.

Picture 1 shows the internal electrical circuit of the keypad. To reduce power dissipation and to prevent overheating of the keypad, a variant for 12 V (supply voltage range: 18 V – 32 V) are available. The pinning of the connector of these two variants are identically.

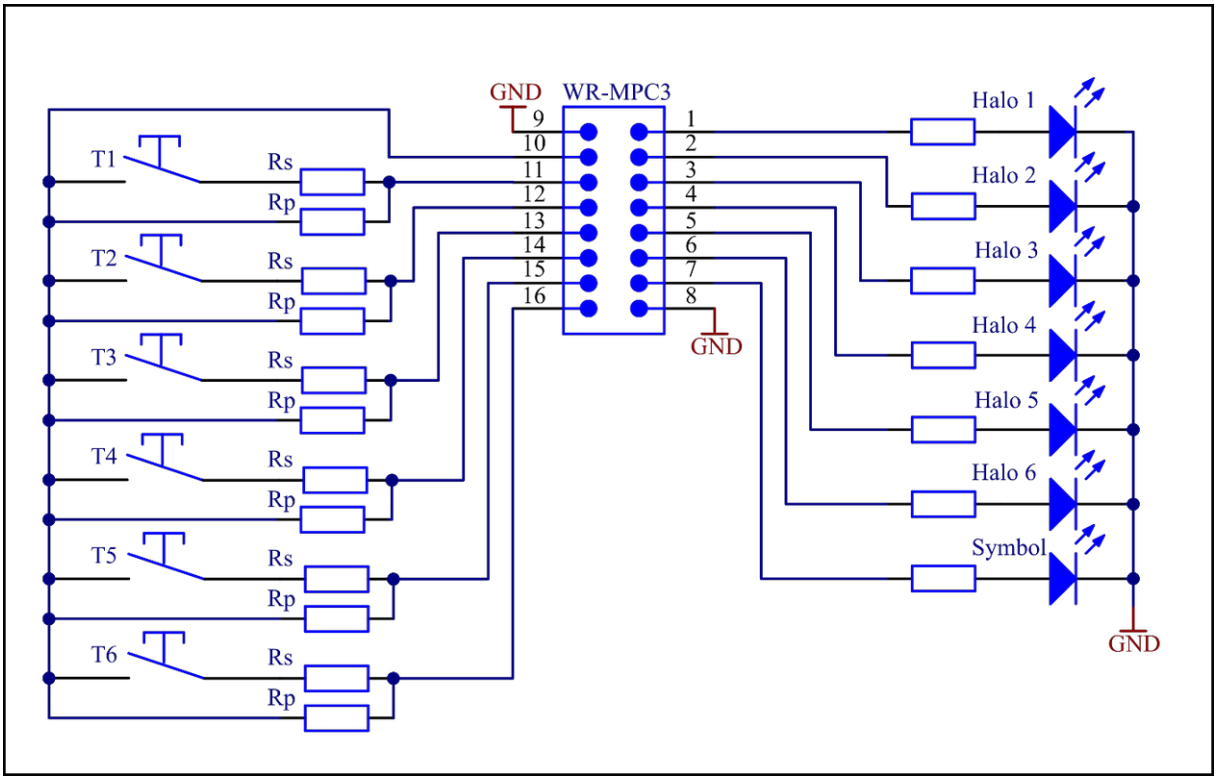

Picture 1: Internal electrical circuit of the keypad

The symbol and halo illumination of a button uses the same ground on pin 8 and 9 of WR-MPC3. Each halo ring can be switched on by connecting pin 1-6 of connector with positive power supply. The symbol illumination can only be switched on for all buttons at once by connecting pin 7 of the connector to positive power supply.

The switching system is separated from the symbol and halo ring illumination and use a common line on pin 10. Each button has a Namur-circuit (only available in option Namur circuit) consisting of a series and a parallel resistor. The keypad can be ordered with or without Namur functionality. With Namur functionality the series and parallel resistor have the following values:

- Rp = 1 kΩ
- Rs = 120 Ω

Without Namur-functionality the values of the resistors are:

- Rp = not placed
- Rs = 0 Ω

Furthermore, it is necessary to debounce the switches. This can be done via software or hardware in the control unit connected to the keypad. The debounce time should be greater than 10ms.

9. Cleaning

Cleaning with water and commercially available soft cloths is possible. Do not use aggressive solvents. Please ensure that the distance between the nozzle and the product is not less than 0.5 m when using a high-pressure water jet.

	**Caution!** Cleaning with a high-pressure water jet is not permitted with a distance nozzle to product less than 0.5 m. – Damage to the keypad – Electrical shock due to leakage of the keypad

10. Optional accessories

Symbol inserts with customer specific symbols or alternatively according to ISO 7000 can be procured. Symbol inserts without symbols (blanks, colored) can also be procured.

11. Liability for quality defects

The general function of the keypad has been tested at the factory before delivery. However, if errors occur despite the careful quality control, they must be reported immediately to EAO or the dealer.

The liability for quality defects is 12 months for the delivered products. Within this period, faulty parts, except wear parts, will be repaired or replaced free of charge if the keypad is returned to EAO, free of charge in the event EAO is responsible for the defect.

Damages caused by improper use, or the use of force are excluded from the liability for quality defects. Damages caused by repairs or modifications to the keypad are also excluded. EAO is exclusively responsible for repairs to the keypad.

Further claims cannot be asserted. Claims arising from the purchase contract remain unaffected.

EAO is not liable for consequential damages. The right to design changes, in the sense of product improvement, is reserved by EAO.

12. Service, repair

In case of a defective keypad or connector, please contact your dealer. In case of malfunctions, the cause of which you cannot clearly identify, please send the defective keypad to the following address:

EAO Automotive GmbH & Co. KG
Service
Richard-Wagner-Strasse 3
08209 Auerbach/ Vogtl.
Tel: +49 (0)3744/ 8264-0
Email: service.esa@eao.com
www.eao.com

13. Decommissioning, disposal

Disconnect the system from the power supply before the disconnection.

Do not pull at the cable when removing the connector.

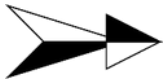

Dispose of the device, components and accessories, packaging materials and documentation in accordance with the country-specific waste treatment and disposal regulations in the area of use.

14. Declaration of Conformity

The declaration of conformity certificate is available for download on the EAO Website www.eao.com within the download section. The document valid for the product listed in this manual is:

Series 09, CAN Keypads I/O - CE-Certification - Compliancy of EAO Products,
from July,15, 2021

In case of further certificates are required, please ask your dealer.