PATROL LED SOUNDER MAX. 105 dB(A) / 76 cd
PA L 1



Compact multifunction sounder/light combination with most flexible, ultra bright LED technology.

- Selectable signaling modes - No matter which signaling mode is required – you are able to choose the one that fits to your needs.
- Selectable blink & flash frequencies - Adaptable to all your applications – select the frequency your gadget requires and boost the perceptibility.
- Selectable Colour (RGB version only) - Not sure about the colour yet? One light for all your needs! PYRA® LED RGB permits to choose the colour you require. Stay flexible and keep your stock to a minimum!
- Safe and easy to install.
- Rapid mounting.
- Economic efficiency.

RGB – multi colour LED (option)
IP 66 – protection system
IK08 – impact-proof housing
+55 °C / –40 °C – operating temperature
10 Years – warranty
EAC – EurAsien Conformity
NEMA 4/4X – protection system
brightness adjustable
M12 – connector (option)
UL – UL approval

3D-COVERAGE PERFORMANCE DATA		PA L 1			
	VISUAL	Indicate	35.1 x 14.9 x 14.2 m	AUDIBLE 80 dB (A)	16 x 13.8 x 16 m
		Warn	15.6 x 6.6 x 6.4 m	85 dB (A)	9 x 7.8 x 9 m
		Alarm	7.8 x 3.3 x 3.2 m	90 dB (A)	5.1 x 4.4 x 5.1 m

To determine the exact signalling area for your needs, please use the online available Pfannenberg Sizing Software PSS.

PRODUCT	PA L 1			
DATA				
Rated voltage	230 V AC	115 V AC	24 V AC	12–48 V DC
Rated frequency	50 / 60 Hz	50 / 60 Hz	50 / 60 Hz	–
Operating range	195–253 V	95–127 V AC	21.6–26.4 V	10–57 V
Current consumption light (max)	36 mA @ 230 V AC	51 mA @ 115 V AC	167 mA @ 24 V AC	120 mA @ 24 V DC
Current consumption sounder (max)	16 mA @ 230 V AC	30 mA @ 115 V AC	150 mA @ 24 V AC	70 mA @ 24 V DC
Max sound level	105 dB (A) @ 1m			
Volume control	max. -12 dB			
Tones	80			
Operating mode internally selectable	continuous light / blinking light / flashing light			
Light source	one high output LED per single unit			
Light intensity (DIN 5037)[1]	76 cd (reducible) per single unit			
Max. viewing distance	202 m			
Operating temperature	–40 °C ... +55 °C			
Storage temperature	–40 °C ... +70 °C			
Installation position	any			
Degree of protection	IP 66 (EN 60529), NEMA TYPE 4/4x, IK 08 (EN 62262)			
Service life of the light source	≥50,000 hrs			
Material – lens	⊘ ● ● ● ● ● (◐ - RGB). Polycarbonate (PC)			
Material – housing	PC / ABS blend			
Cable entry	6x M20 pre-embossed			
Connecting terminal	0.14 - 2.5 mm² fine stranded			
Weight	max. 670 g			

[1] with a clear lens

DIMENSIONS

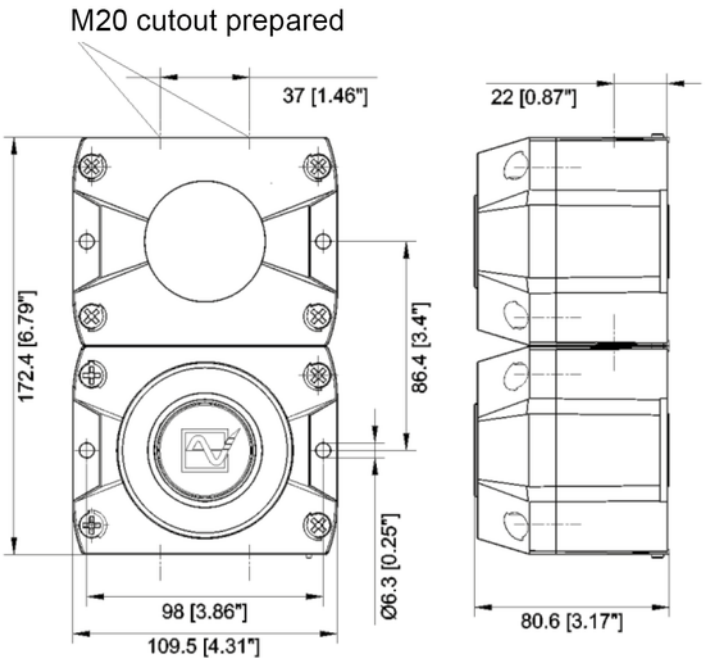

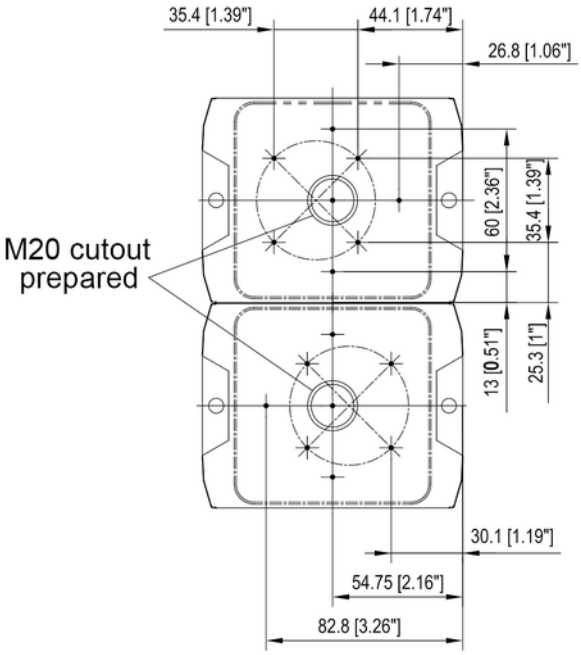

Drilling pattern inside the housing

ORDERING DETAILS		PA L 1	
HOUSING COLOUR	LIGHT / LENS COLOUR	230 V AC	12–48 V DC
		23313108055	23313638055
		23313105000	23313635000
		23313103055	23313633055
		23313104055	23313634055
		23313105055	23313635055

Article numbers for other colours and voltages on request.

OPTIONS/ACCESSORIES

Tamper-proof sealing for PYRA® / PATROL (4-Pack)	28300000002
Looking elements for PYRA® / PATROL (4-Pack)	28912000000
Surface seal	28300000004

Variant with M12 connection on request

TONE TABLE

NO.	DESCRIPTION
1	no tone
2	Sawtooth, DIN tone 33404-3 Germany (emergency signal), PFEER PTAP
9	Slow whoop, fire alarm, UK BS5839-1
11	Interrupted tone (fast)
13	Interrupted tone
15	Slow whoop, evacuation alarm Netherlands NEN 2575
16	Slow whoop, evacuation alarm Australia AS2220
18	Slow whoop, NFPA
22	Pulsating tone, Australien alert AS1670, ISO8201
23	Siren
24	Siren
25	Siren
26	Siren, industrial alarm Germany
27	Sweeping
29	Sweeping (fast)
30	Sweeping
31	Sweeping, France NFC48-265
33	Sweeping (medium), UK BS5839-1
34	Sweeping (fast)
35	Sweeping (fast), UK BS5839-1
36	Sweeping
43	Sweeping
44	Sweeping, IMO 3d, Germany KTA3901 evacuation alarm
45	Sweeping
46	Sweeping, general alarm Finland
52	Continuous tone
53	Continuous tone
54	Continuous tone, Finland (all-clear signal)
55	Continuous tone, PFEER gas alarm
56	Continuous tone
57	Continuous tone, UK BS5839-1
59	Continuous tone
60	Continuous tone
61	Continuous tone
63	Continuous tone
65	Continuous tone, Sweden SS031711 (all-clear signal)
66	Continuous tone
67	Continuous tone, Germany KTA3901 (all-clear signal)
68	Continuous tone
69	Continuous tone
71	Continuous tone
77	Interrupted tone
82	Interrupted tone, PFEER (general alarm), UK BS5839-1 (back-up alarm)
83	Interrupted tone, PFEER (general alarm)
88	Interrupted tone
90	Interrupted tone
91	Interrupted tone
92	Interrupted tone
93	Interrupted tone (fast), Horn
97	Interrupted tone
98	Interrupted tone, Sweden SS031711 (emergency signal)
100	Interrupted tone, industrial alarm Germany
101	Interrupted tone, Sweden SS031711 (important message (pre-mess))
102	Interrupted tone, Sweden SS031711 (local warning)
103	Interrupted tone, Sweden SS031711 (air raid warning)
104	Interrupted tone, Sweden SS031711 (emergency signal)
107	Interrupted tone, Germany KTA3901 (evacuation alarm)
109	Interrupted tone, Australia AS2220, AS1610, AS1670
110	Interrupted tone, (fast variable), bell
111	Interrupted tone, ISO8201 (emergency evacuation signal), USA (evacuation alarm)
112	Interrupted tone, ISO8201 (emergency evacuation signal)
113	Interrupted tone, ISO8201 (emergency evacuation signal), sweeping

TONE TABLE

NO.	DESCRIPTION		NO.	DESCRIPTION	
115	Interrupted tone, IMO (telephone call)	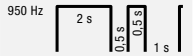	131	Alternating tone, UK BS5839-1 (fire alarm, railway crossing)	
116	Interrupted tone, IMO (leave ship)	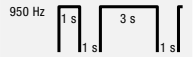	135	Alternating tone, UK BS5839-1 (fire alarm, increased urgency – railway crossing)	
117	Interrupted tone, IMO SOLAS III/50 + SOLAS III/6.4 (general alarm)		142	Alternating tone	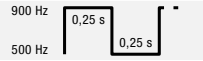
122	Alternating tone		143	Alternating tone, industrial alarm Germany	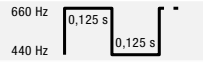
123	Alternating tone	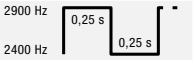	144	Alternating tone	
124	Alternating tone, Singapore	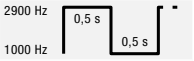	146	Alternating tone, France NFS 32-001 (fire alarm)	
125	Alternating tone		147	Alternating tone, Sweden SS031711	
128	Alternating tone	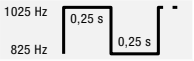	148	Alternating tone, Sweden SS031711	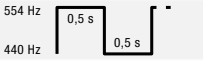
130	Alternating tone, UK BS5839-1 (fire alarm)	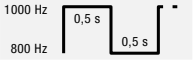	152	Alternating tone (two tone chime)	

CONFORMITY TO STANDARDS

The acoustic parameters conform to the European standard DIN EN ISO 7731:
“Ergonomic – alarms for public areas and workplaces – acoustic alarms“.

The requirement for an acoustic alarm signal can be found in the harmonised standards:

EN 60204-1	Electrical equipment of machines
EN 60825-1	Radiation safety of laser devices, identical to IEC 825 and DIN-VDE 0837

The visual characteristics of flashing lights conform to the European standard DIN EN 842; **“Machine safety – visual alarm signals”.**
Requirements contained in the DIN EN 981 standard; **“Machine safety – system of acoustic and visual alarm and information signals”,** can be fulfilled.

The colours “red” for the emergency signal and “yellow” for the warning signal conform to the requirements of IEC 73 / DIN EN 60073 / VDE 0199; **“Coding of display devices and control elements using colours and supplementary means”.**
References to visual alarm devices can be found in the following standards:

EN 60825-1	Radiation safety of laser devices, identical to IEC 825 and DIN-VDE 0837
DIN EN 54	Fire alarm systems
DIN 54113-2	Radiation protection regulations for the technical operation of X-ray equipment up to 500 kV