

Model Number

UB4000-30GM-E5-V15

Single head system

Features

- **Switch output**
- **5 different output functions can be set**
- **Program input**
- **Synchronization options**
- **Deactivation option**
- **Temperature compensation**
- **Insensitive to compressed air**

Diagrams

Characteristic response curve

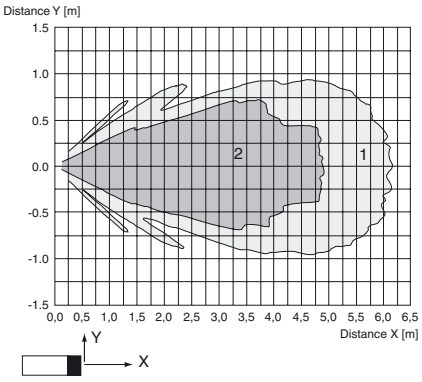

Curve 1: flat surface 100 mm x 100 mm
Curve 2: round bar, Ø 25 mm

Technical data

General specifications	
Sensing range	200 ... 4000 mm
Adjustment range	240 ... 4000 mm
Unusable area	0 ... 200 mm
Standard target plate	100 mm x 100 mm
Transducer frequency	approx. 85 kHz
Response delay	approx. 325 ms
Indicators/operating means	
LED green	solid: Power-on flashing: program function object detected
LED yellow	solid: switching state switch output flashing: program function
LED red	normal operation: "fault" program function: no object detected
Electrical specifications	
Operating voltage U_B	10 ... 30 V DC , ripple 10 %$_{SS}$
No-load supply current I_0	≤ 50 mA
Input/Output	
Synchronization	bi-directional 0 level -U_B...+1 V 1 level: +4 V...+U_B input impedance: > 12 KOhm synchronization pulse: ≥ 100 µs, synchronization interpulse period: ≥ 2 ms
Synchronization frequency	
Common mode operation	≤ 13 Hz
Multiplex operation	≤ 13 Hz / n , n = number of sensors , n ≤ 5
Input	
Input type	1 program input, operating range 1: -U_B ... +1 V, operating range 2: +4 V ... +U_B input impedance: > 4.7 kΩ; program pulse: ≥ 1 s
Output	
Output type	1 switch output PNP , Normally open/closed , programmable
Rated operating current I_e	200 mA , short-circuit/overload protected
Voltage drop U_d	≤ 2.5 V
Repeat accuracy	≤ 0.5 % of switching point
Switching frequency f	≤ 1.5 Hz
Range hysteresis H	1 % of the set operating distance
Temperature influence	< 2 % of far switch point
Ambient conditions	
Ambient temperature	-25 ... 70 °C (-13 ... 158 °F)
Storage temperature	-40 ... 85 °C (-40 ... 185 °F)
Mechanical specifications	
Connection type	Connector M12 x 1 , 5-pin
Degree of protection	IP65
Material	
Housing	nickel plated brass; plastic components: PBT
Transducer	epoxy resin/hollow glass sphere mixture; polyurethane foam
Mass	180 g
Factory settings	
Output	Switch point A1: 550 mm Switch point A2: 4200 mm output function: Window operation mode output behavior: NO contact
Compliance with standards and directives	
Standard conformity	
Standards	EN 60947-5-2:2007 IEC 60947-5-2:2007
Approvals and certificates	
UL approval	cULus Listed, General Purpose
CSA approval	cCSAus Listed, General Purpose
CCC approval	CCC approval / marking not required for products rated ≤36 V

Release date: 2015-02-11 08:31 Date of issue: 2015-02-11 097972_eng.xml

Dimensions

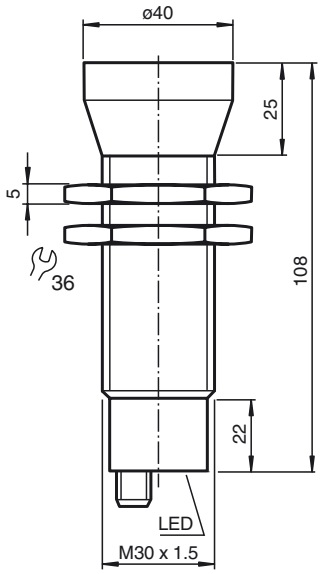

Electrical Connection

Standard symbol/Connections:
(version E5, pnp)

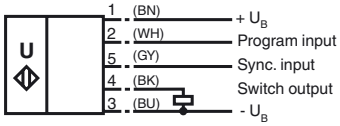

Wire colors in accordance with EN 60947-5-2.

Pinout

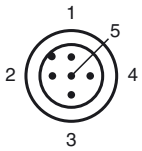

Wire colors in accordance with EN 60947-5-2

1	BN	(brown)
2	WH	(white)
3	BU	(blue)
4	BK	(black)
5	GY	(gray)

Additional Information

Programmable output modes

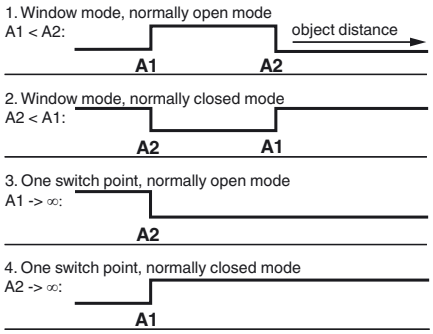

5. A1 -> ∞, A2 -> ∞: Object presence detection mode
Object detected: Switch output closed
No object detected: Switch output open

Release date: 2015-02-11 08:31 Date of issue: 2015-02-11 097972_eng.xml

Refer to "General Notes Relating to Pepperl+Fuchs Product Information".
Pepperl+Fuchs Group www.pepperl-fuchs.com
USA: +1 330 486 0001 fa-info@us.pepperl-fuchs.com
Germany: +49 621 776 4411 fa-info@de.pepperl-fuchs.com
Singapore: +65 6779 9091 fa-info@sg.pepperl-fuchs.com
PEPPERL+FUCHS SENSING YOUR NEEDS

Accessories

BF 30
Mounting flange, 30 mm

BF 5-30
Universal mounting bracket for cylindrical sensors with a diameter of 5 ... 30 mm

UB-PROG2
Programming unit

V15-G-2M-PVC
Female cordset, M12, 5-pin, PVC cable

V15-W-2M-PUR
Female cordset, M12, 5-pin, PUR cable

Description of Sensor Functions

Programming procedure

The sensor features a programmable switch output with two programmable switch points. Programming the switch points and the operating mode is done by applying the supply voltage $-U_B$ or $+U_B$ to the Teach-In input. The supply voltage must be applied to the Teach-In input for at least 1 s. LEDs indicate whether the sensor has recognized the target during the programming procedure.

Note:
If a programming adapter UB-PROG2 is used for the programming procedure, button A1 is assigned to $-U_B$ and button A2 is assigned to $+U_B$.

Programming of the switch output

Window Modes

Normally open (NO) output

1. Place the target at the near end of the desired switch window
2. Program the window boundary by applying $-U_B$ to the Teach-In input (yellow and green LEDs flash)
3. Disconnect the Teach-In input from $-U_B$ to save the window boundary
4. Place the target at the far end of the desired switch window
5. Program the window boundary by applying $+U_B$ to the Teach-In input (yellow and green LEDs flash)
6. Disconnect the Teach-In input from $+U_B$ to save the window boundary

Normally closed (NC) output

1. Place the target at the near end of the desired switch window
2. Program the window boundary by applying $+U_B$ to the Teach-In input (yellow and green LEDs flash)
3. Disconnect the Teach-In input from $+U_B$ to save the window boundary
4. Place the target at the far end of the desired switch window
5. Program the window boundary by applying $-U_B$ to the Teach-In input (yellow and green LEDs flash)
6. Disconnect the Teach-In input from $-U_B$ to save the window boundary

Switch Point Modes

Normally open (NO) output

1. Place the target at the desired switch point position
2. Program the switch point by applying $+U_B$ to the Teach-In input (yellow and green LEDs flash)
3. Disconnect the Teach-In input from $+U_B$ to save the switch point
4. Cover the sensor face with hand or remove all objects from sensing range
5. Program the switch point by applying $-U_B$ to the Teach-In input (red and yellow LEDs flash)
6. Disconnect the Teach-In input from $-U_B$ to save the switch point

Normally closed (NC) output

1. Place the target at the desired switch point position
2. Program the switch point by applying $-U_B$ to the Teach-In input (yellow and green LEDs flash)
3. Disconnect the Teach-In input from $-U_B$ to save the switch point
4. Cover the sensor face with hand or remove all objects from sensing range
5. Program the switch point by applying $+U_B$ to the Teach-In input (red and yellow LEDs flash)
6. Disconnect the Teach-In input from $+U_B$ to save the switch point

Object Detection Mode

1. Cover the sensor face with hand or remove all objects from sensing range
2. Apply $-U_B$ to the Teach-In input (red and yellow LEDs flash)
3. Disconnect the Teach-In input from $+U_B$ to save the setting
4. Apply $+U_B$ to the Teach-In input (red and yellow LEDs flash)
5. Disconnect the Teach-In input from $+U_B$ to save the setting

Factory settings

See technical data.

Display

The sensor provides LEDs to indicate various conditions.

	Green LED	Red LED	Yellow LED
During Normal operation			
Proper operation	On	Off	Switching state
Interference (e.g. compressed air)	Off	Flashing	Previous state
During sensor programming			
Object detected	Flashing	Off	Flashing
No object detected	Off	Flashing	Flashing
Object uncertain (programming invalid)	Off	Flashing	Flashing

Release date: 2015-02-11 08:31 Date of issue: 2015-02-11 097972_eng.xml

Synchronization

This sensor features a synchronization input for suppressing ultrasonic mutual interference ("cross talk"). If this input is not connected, the sensor will operate using internally generated clock pulses. It can be synchronized by applying an external square wave. The pulse duration must be ≥ 100 µs. Each falling edge of the synchronization pulse triggers transmission of a single ultrasonic pulse. If the synchronization signal remains low for ≥ 1 second, the sensor will revert to normal operating mode. Normal operating mode can also be activated by opening the signal connection to the synchronization input (see note below).
If the synchronization input goes to a high level for > 1 second, the sensor will switch to standby mode, indicated by the green LED. In this mode, the outputs will remain in the last valid output state.

Note:
If the option for synchronization is not used, the synchronization input has to be connected to ground (0 V) or the sensor must be operated via a V1 cordset (4-pin).
The synchronization function cannot be activated during programming mode and vice versa.

The following synchronization modes are possible:

1. Several sensors (max. number see technical data) can be synchronized together by interconnecting their respective synchronization inputs. In this case, each sensor alternately transmits ultrasonic pulses in a self multiplexing mode. No two sensors will transmit pulses at the same time (see note below).
2. Multiple sensors can be controlled by the same external synchronization signal. In this mode the sensors are triggered in parallel and are synchronized by a common external synchronization pulse.
3. A separate synchronization pulse can be sent to each individual sensor. In this mode the sensors operate in external multiplex mode (see note below).
4. A high level (+U_B) on the synchronization input switches the sensor to standby mode.

Note:
Sensor response times will increase proportionally to the number of sensors that are in the synchronization string. This is a result of the multiplexing of the ultrasonic transmit and receive signal and the resulting increase in the measurement cycle time.

Installation conditions

If the sensor is installed in an environment where the temperature can fall below 0 °C, one of these mounting flanges must be used for mounting: BF30, BF30-F, or BF 5-30.
If the sensor is mounted in a through hole using the included steel nuts, it must be mounted at the middle of the threaded housing. If it must be mounted at the front end of the threaded housing, plastic nuts with centering ring (optional accessories) must be used.

Release date: 2015-02-11 08:31 Date of issue: 2015-02-11 097972_eng.xml