DATASHEET

STANDARD CARRYING HANDLE 40302 ZI

PICTURE

DESCRIPTION:

Very strong, especially recommended for slinging.
The ring is held in the open position by the friction of the leaf spring, making it easy to sling. The same spring allows the ring to be held in its closed position.
Easy to carry thanks to the plastic sleeve.
The ring is integral with the plate.
Maximum load: 70kg.
Heat resistance: 100°C

FEATURES:

- Finish: Zinc Plated
- Material: Steel
- Dimensions: 124 x 60.5 mm
- Height: 60.5 mm
- Width: 124 mm

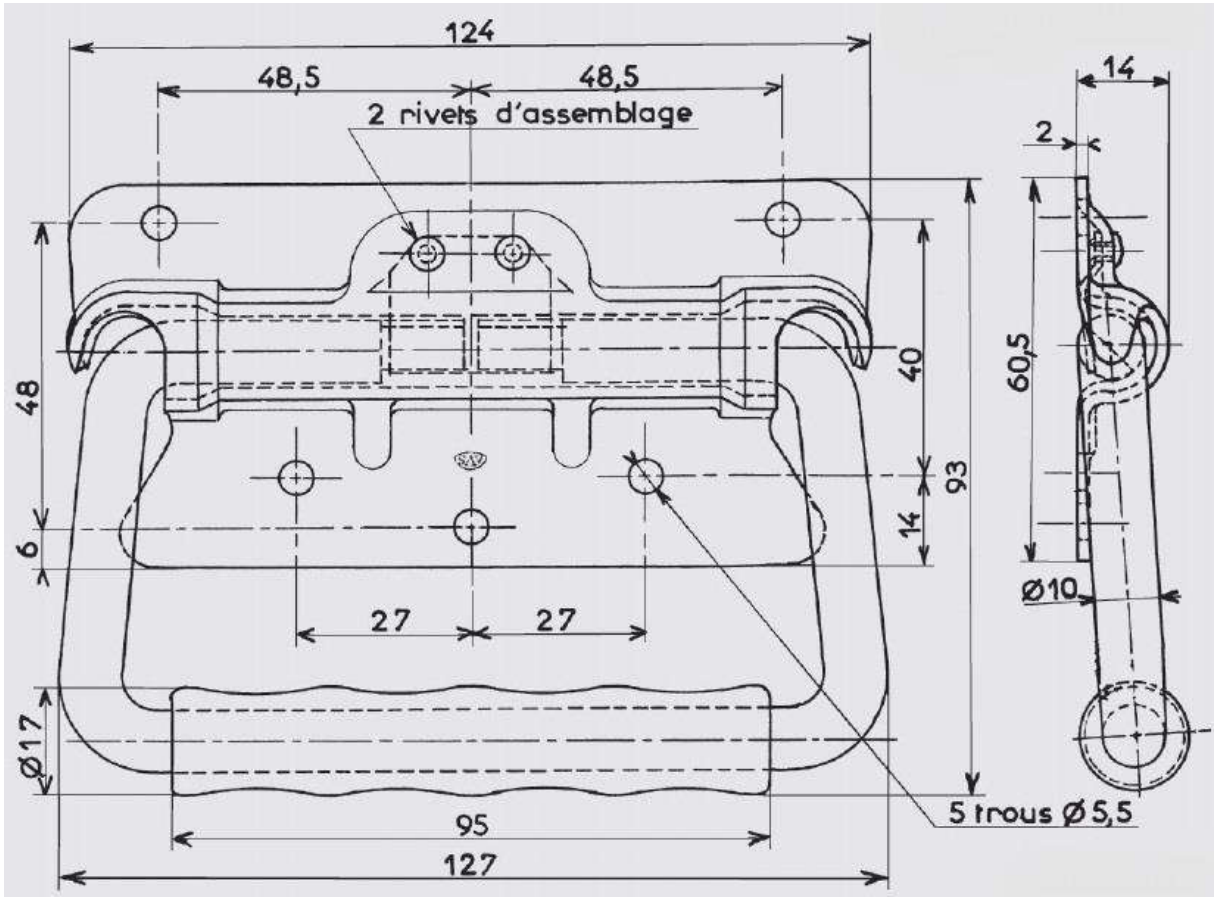
124
48,5
48,5
2 rivets d'assemblage
14
2
60,5
48
40
93
14
6
Ø10
27
27
Ø17
95
127
5 trous Ø5,5