O1D108

Photoelectric distance sensor

O1DLF3KG/IO-LINK

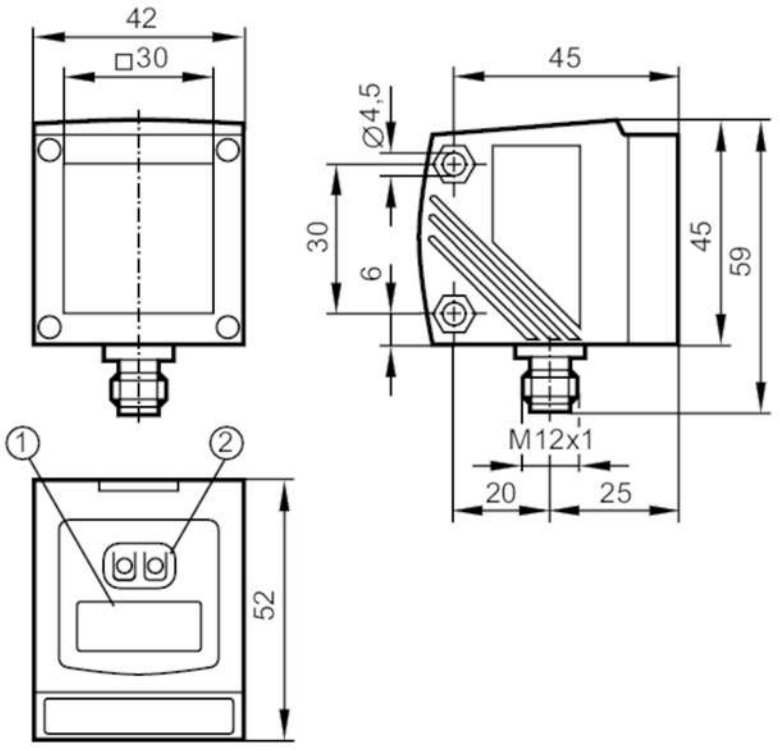

1 alphanumeric display 4-digit
2 programming buttons

Product characteristics		
Laser protection class		2
Housing		rectangular
Application		
Application	[m]	0.2...100
Electrical data		
Operating voltage	[V]	18...30 DC; ("supply class 2" to cULus)
Current consumption	[mA]	< 150
Protection class		III
Reverse polarity protection		yes
Typ. lifetime	[h]	50000
Inputs / outputs		
Number of inputs and outputs		Number of digital outputs: 2; Number of analogue outputs: 1
Outputs		
Total number of outputs		2
Electrical design		PNP
Number of digital outputs		2
Output function		normally open / normally closed; (programmable)
Max. current load per output	[mA]	200

O1D108

Photoelectric distance sensor

O1DLF3KG/IO-LINK

Number of analogue outputs		1	
Analogue current output	[mA]	4...20; (IEC 61131-2)	
Max. load	[Ω]	250	
Analogue voltage output	[V]	0...10; (IEC 61131-2)	
Min. load resistance	[Ω]	5000	
Short-circuit protection		yes	
Type of short-circuit protection		pulsed	
Overload protection		yes	
Detection zone			
Max. light spot width	[mm]	25	
Max. light spot height	[mm]	25	
Light spot dimensions refer to		18 m	
Background suppression	[m]	< 100	
Measuring/setting range			
Measuring range	[m]	0.2...18; (white paper 200 x 200 mm 90% remission)	
Sampling rate	[Hz]	1...33	
Interfaces			
Communication interface		IO-Link	
Transmission type		COM2 (38,4 kBaud)	
IO-Link revision		1.1	
SDCI standard		IEC 61131-9	
Profiles		Smart Sensor: Sensor Identification; Binary Data Channel; Process Value; Sensor Diagnosis	
SIO mode		yes	
Required master port type		A	
Process data analogue		2	
Process data binary		2	
Min. process cycle time	[ms]	6	
Supported DeviceIDs		**Type of operation**	**DeviceID**
		default	811
Operating conditions			
Ambient temperature	[°C]	-10...60	
Protection		IP 67	
Tests / approvals			
EMC		EN 60947-5-2	
Laser protection class		2	

O1D108

Photoelectric distance sensor

O1DLF3KG/IO-LINK

Notes on laser protection		Caution:	laser light
		Power:	<= 4,0 mW
		Wave length:	650 nm
		pulse:	1,3 ns
		Do not stare into beam.	
		Avoid exposure to the laser light.	
		laser class:	2
			EN / IEC60825-1:2007
			EN / IEC60825-1:2014
			Complies with 21 CFR 1040 except for deviations pursuant to Laser Notice No. 50, dated June 2007.
MTTF	[years]	106	

Mechanical data

Weight	[g]	305
Housing		rectangular
Dimensions	[mm]	59 x 42 x 52
Materials		housing: diecast zinc; front pane: glass; LED window: PC
Lens alignment		side lens

Displays / operating elements

Display	switching status	2 x LED, yellow
	operation	LED, green
	distance value, programming	alphanumeric display, 4-digit

Accessories

Accessories (optional)	Protective cover, E21133

Remarks

Pack quantity	1 pcs.

Electrical connection

Connector: 1 x M12; coding: A

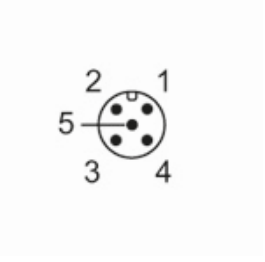

O1D108

Photoelectric distance sensor

O1DLF3KG/IO-LINK

Connection

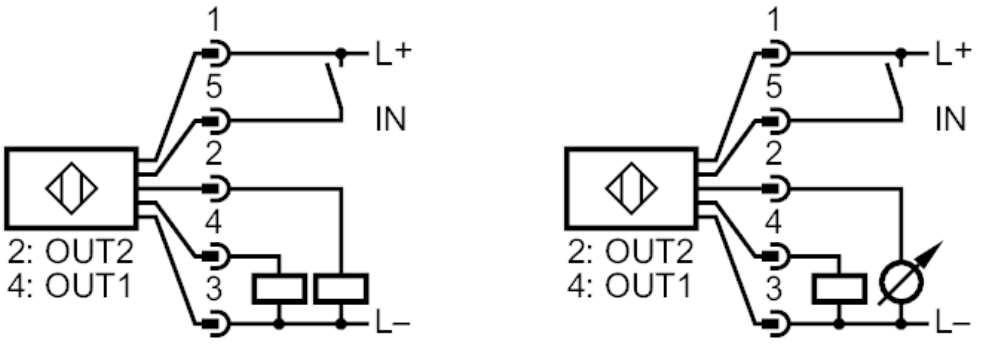

2:	OUT2 switching output or 4...20 mA / 0...10 V
4:	OUT1 switching output or IO-Link
5:	IN Laser On/ Off Ein / Aus

Other data

Parameter	Setting range	Factory setting
Uni	m, inch	m
OU1	Hno, Hnc, Fno, Fnc	Hno
SP1	0.20...18.00	1.00
nSP1	0.20...18.00	0.80
FSP1	0.20...18.00	1.20
OU2	Hno, Hnc, Fno, Fnc, I, U	I
SP2	0.20...18.00	2.00
nSP2	0.20...18.00	1.80
FSP2	0.20...18.00	2.20
ASP	0...18.00	0
AEP	0...18.00	18.00
rATE [Hz]	1...15	15
dS1	0...0.1...5	0
dr1	0...0.1...5	0
dS2	0...0.1...5	0
dr2	0...0.1...5	0
dFo	0...0.1...5	0
dIS	d1...3 ; rd1...3; OFF	d3

O1D108

Photoelectric distance sensor

O1DLF3KG/IO-LINK

repeatability/accuracy

	repeatability of the measured values		accuracy	
	white (90 % remission)	grey (18 % remission)	white (90 % remission)	grey (18 % remission)
0.20...1.0 m	± 0.45 cm	± 0.6 cm	± 1.5 cm	± 1.6 cm
1.00...2.00 m	± 0.5 cm	± 0.8 cm	± 1.5 cm	± 1.8 cm
2.00...4.00 m	± 1.25 cm	± 1.9 cm	± 2.25 cm	± 3.0 cm
4.00...6.00 m	± 2.0 cm	± 3.0 cm	± 3.0 cm	± 4.0 cm
6.00...10.00 m	± 3.5 cm	± 5.0 cm	± 4.5 cm	± 6.0 cm
10.00...18.00 m	± 5.0 cm		± 6.0 cm	

Sampling rate	15 Hz
Extraneous light on the object	< 10 klx
The values apply at	
constant ambient conditions	23 °C / 960 hPa
minimum power-on time in minutes	10

repeatability/accuracy

	repeatability of the measured values		accuracy	
	white (90 % remission)	grey (18 % remission)	white (90 % remission)	grey (18 % remission)
0.20...1.0 m	± 0.45 cm	± 0.6 cm	± 1.5 cm	± 1.6 cm
1.00...2.00 m	± 0.5 cm	± 0.8 cm	± 1.5 cm	± 1.8 cm
2.00...4.00 m	± 1.6 cm	± 1.9 cm	± 2.5 cm	± 3.0 cm
4.00...6.00 m	± 2.4 cm	± 3.3 cm	± 3.5 cm	± 4.5 cm
6.00...10.00 m	± 5.0 cm		± 6.5 cm	

Sampling rate	15 Hz
Extraneous light on the object	< 40 klx
The values apply at	
constant ambient conditions	23 °C / 960 hPa
minimum power-on time in minutes	10

In case of higher extraneous light on the object (up to 40 klx) the following specifications apply:

	white (90 % remission)	grey (18 % remission)	black (6 % remission)	
Measuring range	0.2...10 m	0.2...6 m	0.2...4 m	