MIKALOR

Two Ear Clip W1



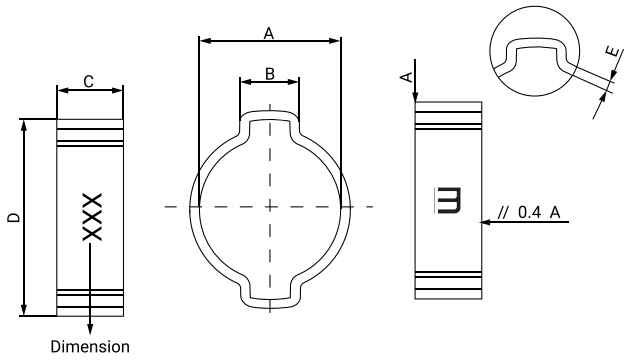

The use of two ear clips is an economical solution for leak-tightsimple hose assemblies on hoses transporting air, gas or other fluids.

The two ears give the clip extra grip and help to maintain constant pressure around the hose. The edges are rounded to avoid damage to the hose and the assembly of this clamp is fast, safe and easy. The clamping range is greater than the one ear clip, meaning that the two-ear clip can be used on larger bore hoses. The practical design of two ear clips means that they clamp firmly onto the assembly and are tamper proof once mounted.

MATERIAL:	Steel W1 DC04 (EN 10139)
FINISH:	Zinc-plated Cr3
CORROSION RESISTANCE:	72 hours Salt Spray (ASTM B-117)

Ø Application	Part Number	A ±0.2	B ±0.2	C ±0.2	D +0.5 -0.2	E +0.1 -0.02	Box Quantity	Outer Box Quantity
5-7	03012101	7,3	4,3	6,0	11,0	0,6	2.000	16.000
7-9	03012110	9,3	4,8	6,0	13,5	0,8	1.000	16.000
9-11	03012128	11,3	5,3	6,5	17,0	0,8	1.000	4.000
10-12	03012099	12,3	5,5	6,5	18,0	0,9	500	8.000
11-13	03012136	13,3	5,8	6,5	19,0	0,9	500	8.000
13-15	03012144	15,3	6,3	7,0	21,5	1,0	500	4.000
14-17	03012152	17,5	6,6	7,0	24,0	1,1	500	4.000
15-18	03012160	18,5	7,0	7,5	25,0	1,1	500	2.000
17-20	03012179	20,5	7,6	7,5	27,0	1,1	250	2.000
18-21	03012187	21,5	7,9	8,0	28,0	1,1	250	2.000
20-23	03012195	23,5	8,5	8,0	31,0	1,1	250	2.000
22-25	03012208	25,5	9,1	8,5	33,0	1,3	200	1.600
23-27	03012216	27,5	9,4	8,5	35,0	1,3	200	1.600
25-28	03012224	28,5	10,0	9,0	36,0	1,3	200	800
28-31	03012232	31,5	10,6	9,0	39,0	1,3	100	800
31-34	03012240	34,5	11,0	9,5	42,0	1,3	100	800
34-37	03012259	37,5	11,5	9,5	46,0	1,5	100	800
37-40	03012267	40,5	12,0	10,0	49,0	1,5	100	400
40-43	03012275	43,5	12,5	10,0	53,0	1,5	75	600
43-47	03012283	46,5	13,0	10,5	56,0	1,5	75	300

MIKALOR

W4 Stainless Steel Two Ear Clip



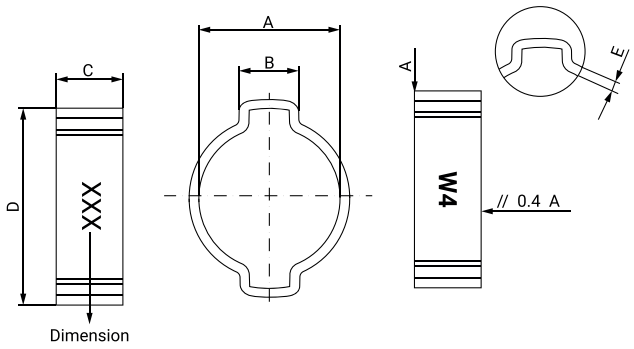

The use of two ear clips is an economical solution for leak-tightsimple hose assemblies on hoses transporting air, gas or other fluids.

The two ears give the clip extra grip and help to maintain constant pressure around the hose. The edges are rounded to avoid damage to the hose and the assembly of this clamp is fast, safe and easy. The clamping range is greater than the one ear clip, meaning that the two-ear clip can be used on larger bore hoses. The practical design of two ear clips means that they clamp firmly onto the assembly and are tamper proof once mounted.

MATERIAL:	Stainless Steel W4 AISI 304 1.4301 (EN 10088-2:2005)
CORROSION RESISTANCE:	400 hours Salt Spray (ASTM B-117)

Ø Application	Part Number	A ±0.2	B ±0.2	C ±0.2	D +0.5 -0.2	E +0.1 -0.02	Box Quantity	Outer Box Quantity
5-7	23012108	7,3	4,3	6,0	11,0	0,6	2.000	16.000
7-9	23012116	9,3	4,8	6,0	13,5	0,8	1.000	16.000
9-11	23012124	11,3	5,3	6,5	17,0	0,8	1.000	8.000
10-12	23012298	12,3	5,5	6,5	17,5	0,8	500	8.000
11-13	23012132	13,3	5,8	6,5	18,8	0,8	500	8.000
13-15	23012140	15,3	6,3	7,0	21,3	1,0	500	4.000
14-17	23012159	17,5	6,6	7,0	23,8	1,0	500	4.000
15-18	23012167	18,5	7,0	7,5	24,8	1,0	500	4.000
17-20	23012175	20,5	7,6	7,5	26,8	1,0	250	2.000
18-21	23012183	21,5	7,9	8,0	27,8	1,0	250	2.000
20-23	23012191	23,5	8,5	8,0	30,3	1,0	250	2.000
22-25	23012204	25,5	9,1	8,5	32,8	1,2	200	1.600