Christian P-4.0
Softstart-/ Motorstart device



Product Description

The smart motorstarter function is a softstart, reversal and protection of 3-phase asynchronous motors. Overcurrent is detected when the set current is exceeded longer than 2 sec. Direction reversal takes place via relay switching. The relays are de-energised at this. This ensures a long service life.

Function Diagram

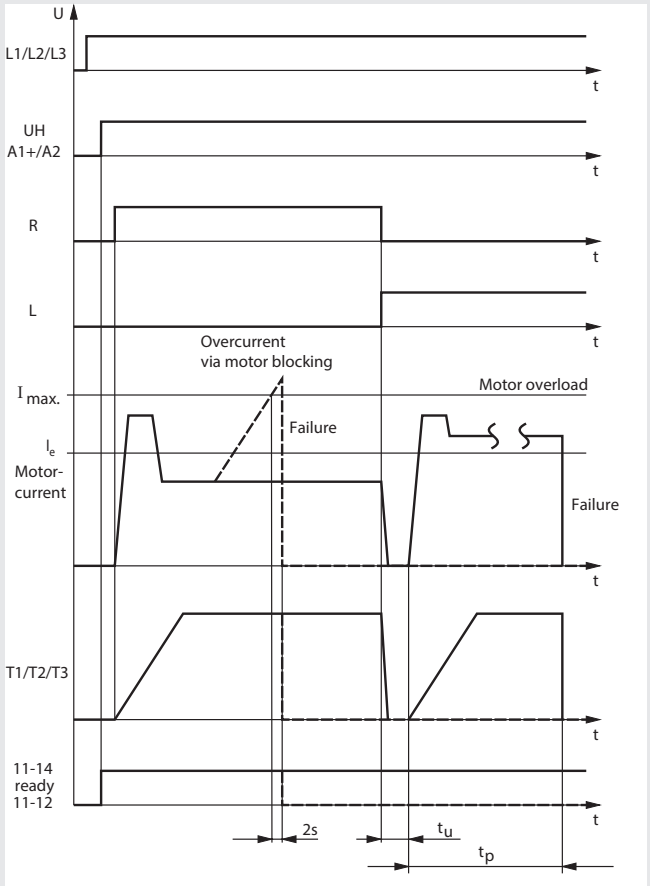

t_u = switchover delay time

t_p = Overload response time according to characteristic class 10A respectively 5A (option /TP/IC)

Your Advantages

- Up to 6 function in one unit
  - Reversing anticlockwise
  - Reversing clockwise
  - Softstart
  - Softstop
  - Current monitoring or motor protection (optional)
  - Galvanic separation via forcibly guided contacts contact distance min. 0.5 mm (optional)
- 80 % less space
- Simple and time-saving commissioning as well as user-friendly operation through setting via potentiometers on absolute scales
- Blocking protection
- Hybrid relay combines benefits of relay technology with non-wearing semiconductor technology
- High availablility by
  - Temperature monitoring of semiconductors
  - High withstand voltage up to 1500 V
  - Load free relay reversing function

Features

- According to IEC/EN 60 947-4-2
- To reverse 3 phase motors up to 550 W to 4 kW
- 2-phase softstart
- 4 potentiometer für setting of starting torque, deceleration torque , softstart /-stop, overcurrent limit or rated motor current
- 4 LEDs for status indication
- Reversing with relays without current, softstart, softstop with thyristor
- Galvanic separated 24V-inputs for clockwise- and anticlockwise
- Reset button on front
- Connection facility for external reset button
- Relay indicator output for operation
- Galvanic separation between control circuit and power circuit
- Width: 22,5 mm

Approvals and Markings

CE

Applications

- Reversing operation for door and gate controls, bridge drives and lifting applications with monitoring of blockage
- Conveyor systems with monitoring of blockage
- Actuating drives in process controls with blockage monitoring

Circuit Diagram

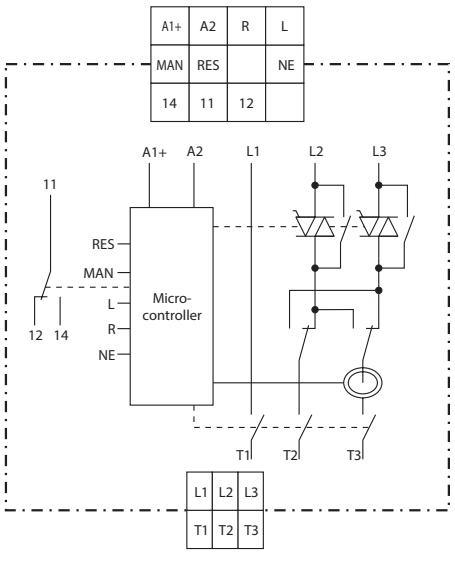

All technical data in this list relate to the state at the moment of edition. We reserve the right for technical improvements and changes at any time.

Connection Terminals

Terminal designation	Signal designation
A1 (+)	Auxiliary voltage + DC 24 V
A2	Auxiliary voltage 0 V
R+	Control input clockwise
L+	Control input anti-clockwise
NE	Earth connection control input
MAN	Input for remote reset
RES	Output for remote reset
11, 12, 14	Indicator relay for operation
L1	Phase voltage L1
L2	Phase voltage L2
L3	Phase voltage L3
T1	Motor connection T1
T2	Motor connection T2
T3	Motor connection T3

Function

Soft start
Two motor phases are impacted through thyristor phase-fired control to allow a steady increase of the currents. The motor torque behaves in the same manner when ramping up. This ensures that the drive can start without jerking and the drive elements are not damaged. Starting time and starting torque can be adjusted via rotary switch.

Softstop
The softstop function shall extend the natural running down time of the drive to also prevent jerky stopping.
The deceleration time is set with rotary switch ton, the running-down torque with rotary switch M_{off} .

Motor protection (option /TP /IC)
The thermal load of the motor is calculated using a thermal model. The nominal motor current can be adjusted via potentiometer I_e. To calculate the thermal load the current is measured in phase T3.
A symmetric current load of all 3 phases of the motor is assumed for flawless functioning. When the trigger value – stored in the trigger characteristics -, is reached, the motor is switched off and the device switches to fault 8. The fault can be acknowledged via the reset button or reset input.

Attention: The data of the thermal model is cleared through reset or voltage failure. In this case, the user must provide adequate cooling time of the motor.

Phase failure
To make sure the motor is not loaded with asymmetric currents, a check takes place during motor start whether phases L1, L2 and L3 are present. If one or several phases are absent, the device switches to fault 4. The fault can be acknowledged via the reset button or reset input.

Motor current protection (option /OL)
To ensure blocking protection is in place, the motor current is monitored in T3. The switching threshold can be adjusted via potentiometer I_{max}. In the event of overcurrent, the power semiconductors deactivate and the signal relay for normal operation is reset. The red “ERR” LED flashes code 5. This status is stored. The fault can be acknowledged by switching the auxiliary voltage off / on, operating the reset button or selecting the reset control input.

Motor connection (option /TP /IC)
In off state or fault condition the motor terminals are isolated from the mains voltage by a 4 pole. forcibly guided contact relay. The contact opening is min. 0.5 mm.

Control inputs
Clockwise rotation and anticlockwise rotation can be selected via two control inputs. The input signal detected first is executed if both inputs are selected simultaneously. After the detected signal is cancelled, the rotational direction is reversed via the soft start function.
The control inputs have a common isolated ground connection NE.

Signalling output “Ready”
Contact 11/14 is closed if no device fault is present.

Indication

green LED "ON":	permanent on	- auxiliary supply connected
yellow LED "R":	permanent on	- clockwise, power semiconductors bridged
	flashing	- clockwise, ramp operation
yellow LED "L":	permanent on	- anticlockwise, power semiconductors bridged
	flashing	- anticlockwise, ramp operation
red LED "ERROR":	flashing	- Error
	1*)	- Overtemperature on semiconductors
	2*)	- Wrong mains freqency
	3*)	- Phase reversal detected
	4*)	- min. 1 phase is missing
	5*)	- Motor overcurrent detected
	6*)	- Mains isolating relay not disconnected
	7*)	- Incorrect temperature measurement circuit
	8*)	- Motor protection has responded

1*) - 8*) = Number of flashing pulses in sequence

Reset Function

2 options are available to acknowledge the fault

Manual (reset button):
Acknowledgement is performed by operating the reset button at the front of the device. If the button is still actuated after 2 seconds, the device resumes the fault state.

Manual (remote acknowledgement):
Remote acknowledgement can be realised by connecting a button (N/O contact) between the terminals MAN and RES. Acknowledgement is triggered as soon as the contact of the button closes. If the button is still actuated after 2 seconds, the device resumes the fault state since a defect in the acknowledgement circuit cannot be ruled out.

Setting Facilities

Rotary switch M_{on}: - Starting torque at softstart 30 ... 80 %
Rotary switch M_{off} (option / 1_ _): - Deceleration torque at softstop 80 ... 30 %
Rotary switch t_{on} / t_{off}: - Start / deceleration ramp 1 ... 10 s
Rotary switch I_{max} (variant / _ _ 0): - Motor current monitoring 5 ... 50 A_{eff}
Rotary switch I_e (Variante / _ _1): - Nom. motor current 1.6 A_{eff} ... 9.0 A_{eff}

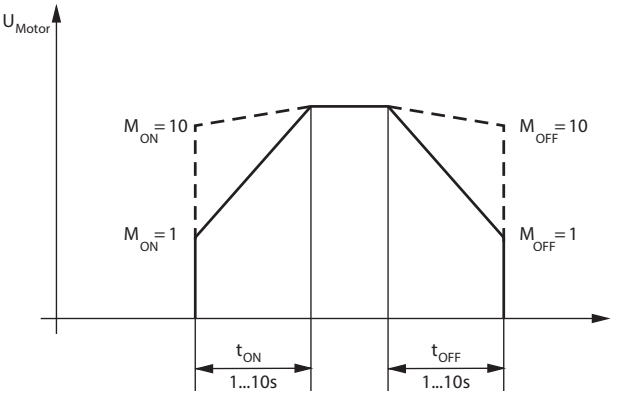

Setting of start / deceleration ramp

Set-up Procedure

1. Connect motor and device according to application example. A clockwise rotating field is assumed for operation. A anti-clockwise rotating field triggers a fault message.
2. Turn rotary switch t_{on} / t_{off} fully clockwise, M_{on} e. g. M_{off} fully anticlockwise and rotary switch I_{max} e. g. I_e of the requrired current.
3. Connect voltage and starting via input R- or softstop L-.
4. The starting time is set by turning the rotary switch ton anti-clockwise and the starting torque is set by turning the rotary switch M_{on} clockwise to the desired value. If set correctly, the motor shall swiftly accelerate to the nominal speed.

Safety Notes

- Never clear a fault when the device is switched on
- The user must ensure that the device and the necessary component are mounted and connected according to the locally applicable regulations and technical standards (VDE, TÜV,BG).
- Adjustments may only be carried out by qualified specialist staff and the applicable safety rules must be observed.
- After a short circuit the motor starter is defective and has to be replaced (Assignment type 1).
- Group supply:
- If several motor starters are protected together, the sum of the motor currents must not exceed 25 A.

Mounting Notes

When mounted with other devices the devices must not be placed closer than 10 mm side-by-side.

The phase current in the device is measured with a hall effect sensor. Due to this principle also magnetic fields next to the sensor may have an influence. When designing circuits with this motorstarter components that generate magnetic fields like contactors, transformers, high current wires should not be placed close to the sensor.

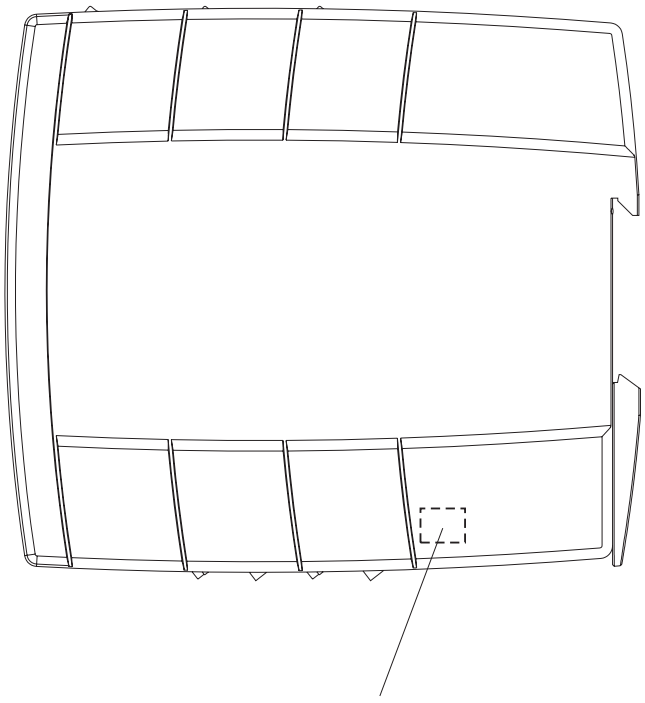

position of the current sensor

Technical Data

Nominal voltage L1/L2/L3:	3 AC 200 ... 480 V ± 10%
Nominal frequency:	50 / 60 Hz , automatic detection
Auxiliary voltage:	DC 24 V ± 10%
Motor power:	4 kW at AC 400 V
Min. motor power:	25 W
Operating mode:	
9 A:	AC 51
9 A:	AC 53a: 6-2: 100-30 IEC/EN 60947-4-2
Surge current:	200 A (tp = 20 ms)
Load limit integral:	200 A^2s (tp = 10 ms)
Peak reverse voltage:	1500 V
Overvoltage limiting:	AC 550 V
Leakage current in off state:	< 3 x 0.5 mA
Starting voltage:	30 ... 80 %
Start / deceleration ramp:	1 ... 10 s
Consumption::	2 W
Switchover delay time:	250 ms
Start up delay for master tick:	min. 100 ms
Release delay for master tick:	min. 50 ms
Overcurrent measuring device:	AC 5 ... 50 A at option /OL
Nominal motor current I_e:	1.6 A ... 9.0 A at option /TP /IC
Measuring accuracy:	± 5% of end of scale value
Measured value update time	
at 50 Hz:	100 ms
at 60 Hz:	83 ms
Motor protection	
I_e 1.5 A bis 6.9 A:	Class 10 A
I_e 6.9 A bis 9.0 A:	Class 5
Short circuit strength:	
max. fuse rating:	25 A gL IEC/EN 60 947-5-1
Assignment type:	1
Electrcal life:	> 10 x 10^6 switching cycles

Inputs

Control input right, left:	DC 24V
Rated current:	4 mA
Response value ON:	DC 10 V ... 30 V
Response value OFF:	DC 0 V ... 8 V
Connection:	polarity protected diode
Manuel:	DC 24 V (connect button on terminals "MAN" and "RES")

Indicator Outputs

Technical Data

RES:	DC 24 V, semiconductor, short circuit proof, rated continuous current 0.2 A	
Ready:	Changeover contact 250 V / 5 A	
Contact:	1 changeover contact	
Switching capacity		
to AC 15		
NO contact:	3 A / AC 230 V	IEC/EN 60 947-5-1
NC contact:	1 A / AC 230 V	IEC/EN 60 947-5-1
Electrical life		
to AC 15 at 3 A, AC 230 V:	2 x 10^5 switch. cycles	IEC/EN 60 947-5-1
Mechanical life:	30 x 10^6 switching cycles	
Permissible switching frequency:	1800 switching cycles/h	
Short circuit strength		
max. fuse rating:	4 A gL	IEC/EN 60 947-5-1

General Data

Operating mode:	Continuous operation	
Temperature range:	0 ... + 60 °C (see derating curve)	
Clearance and creepage distances		
overvoltage category / contamination level between control input- , auxiliary voltage and Motor voltage respectively		
indicator contact:	4 kV / 2	IEC/EN 60 664-1
EMC		
Electrostatic discharge (ESD):	8 kV (air)	IEC/EN 61 000-4-2
Fast transients:	2 kV	IEC/EN 61 000-4-4
Surge voltage between		
wires for power supply:	1 kV	IEC/EN 61 000-4-5
between wire and ground:	2 kV	IEC/EN 61 000-4-5
HF-wire guided:	10 V	IEC/EN 61 000-4-6
Voltage dips:		IEC/EN 61 000-4-11
Industrial RF interference emission		
Radio interference:		EN 55 011
Radio interference voltage:		EN 55 011
Harmonics:		EN 61 000-3-2
Degree of protection:		
Housing:	IP 40	IEC/EN 60 529
Terminals:	IP 20	IEC/EN 60 529
Vibration resistance:	Amplitude 0.35 mm frequency 10 ... 55 Hz,	IEC/EN 60 068-2-6
Climate resistance:	0 / 055 / 04	IEC/EN 60 068-1
Wire connection:		DIN 46 228-1/-2/-3/-4
Screw terminal (fixed):		
Cross section:	1 x 0.34 ... 2.5 mm^2 solid or stranded ferruled (isolated)	
Insulation of wires or sleeve length:	8 mm	
Fixing torque:	0.5 Nm	
Wire fixing:	captive slotted screw	
Mounting:	DIN rail	IEC/EN 60 715
Weight:	220 g	

Dimensions

Width x height x depth:	22.5 x 105 x 120.3 mm

Characteristics

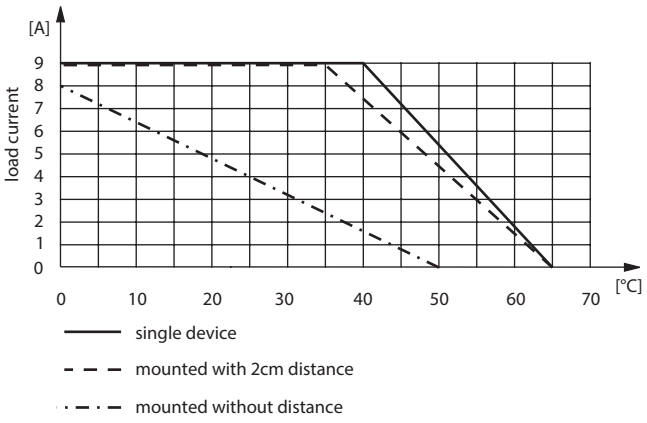

Derating curve:
Rated continuous current depending on ambient temperature and distance
Enclosure without ventilation slots

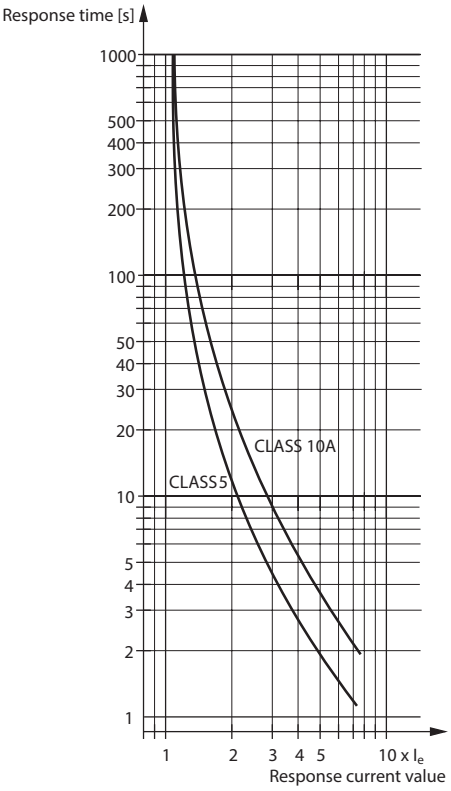

Variant / _ _ 1:
Trigger characteristics
Motor overload protection

Standard Type

Christian P-4.0 /RL /OL

Article number:	490800
• Nominal voltage:	3 AC 200 ... 480 V
• Nominal current:	9 A
• Deceleration ramp:	1 ... 10 s
• Control input R, L	
• With softstart / softstop	
• Without mains isolating	
• With overcurrent protection	
• Width:	22.5 mm

Ordering Example

Christian P-4.0/RL/OL
Art. no.: **490800**
3 x 200-480V AC, 9A load current, 1...10s Deceleration ramp,
Right / Left rotation, 5-50A blocking current, no partiotioning gate,
Signal relay ON if status is OK

Christian P-4.0/RL/TP/IC
Art. no.: **490801**
3 x 200-480V AC, 9A load current, 1...10s Deceleration ramp,
Right / Left rotation, 1,6-9A overload current, internal partiotioning gate,
Signal relay ON if status is OK

Application Example

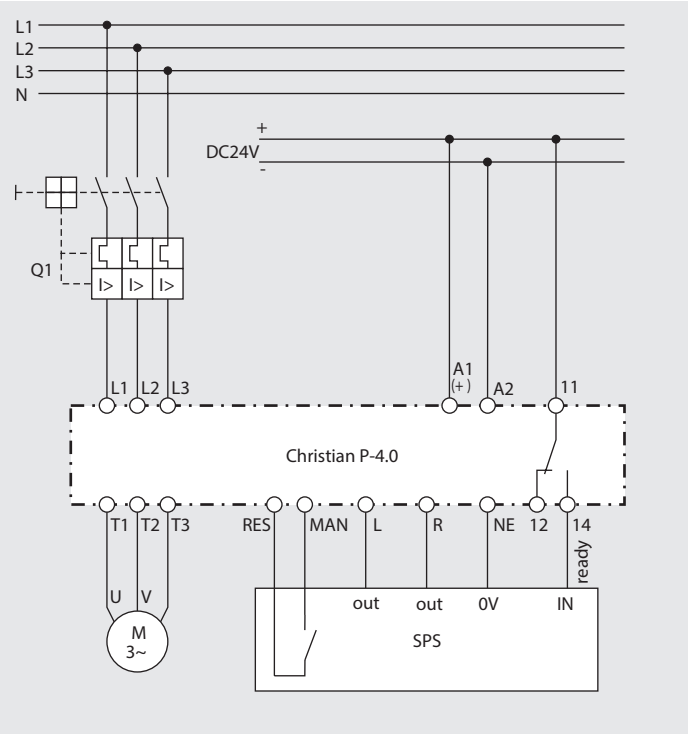

Motor control with UG 9256 and PLC

TELE Haase Steuergeräte Ges.m.b.H.
Vorarlberger Allee 38
AT-1230 Vienna, AUSTRIA

RELEASE 2017/01

Subject to alterations and errors