sferaco
VALVES & FITTINGS

REF. 679-689

BRASS BALL VALVE FOR TOILET FLUSK TANK

kiwa
Partner for progress
ISO 9001-2008





Size :	DN 3/8"
Ends :	Male – free nut BSP
Min Temperature :	0°C
Max Temperature :	+ 90°C
Max Pressure :	10 Bars
Specifications :	For toilet flush tank

Materials : Brass CW617 N according to EN12165

Sferaco 90 rue du Ruisseau 38297 St Quentin Fallavier Tel: + 33 (0) 474.94.15.90 Fax: + 33 (0) 474.95.62.08 Internet: www.sferaco.fr E-mail : sferaco@sferaco.fr

Information provided as an indication and subject to possible modification

BRASS BALL VALVE FOR TOILET FLUSK TANK

SPECIFICATIONS :

- For toilet flush tank
- With free nut
- Straight or angle valve
- Ball valve type

USE :

- For water
- Min Temperature Ts : 0°C
- Max Temperature Ts : + 90°C
- Max Pressure Ps : 10 bars

RANGE :



- Straight ball valve for toilet flush tank (chromed) male / female **Ref. 679003** DN 3/8“



- Angle ball valve for toilet flush tank (chromed) male / female **Ref. 689003** DN 3/8“



- Angle ball valve for toilet flush tank (chromed) male / female screwdriver handle **Ref. 689113** DN 3/8“



- Kit with angle ball valve and flexible 15 cm F 3/8“- Male 3/8 with nut for copper pipe D.10 **Ref. 9810991**

BRASS BALL VALVE FOR TOILET FLUSK TANK

MATERIALS REF.679 :

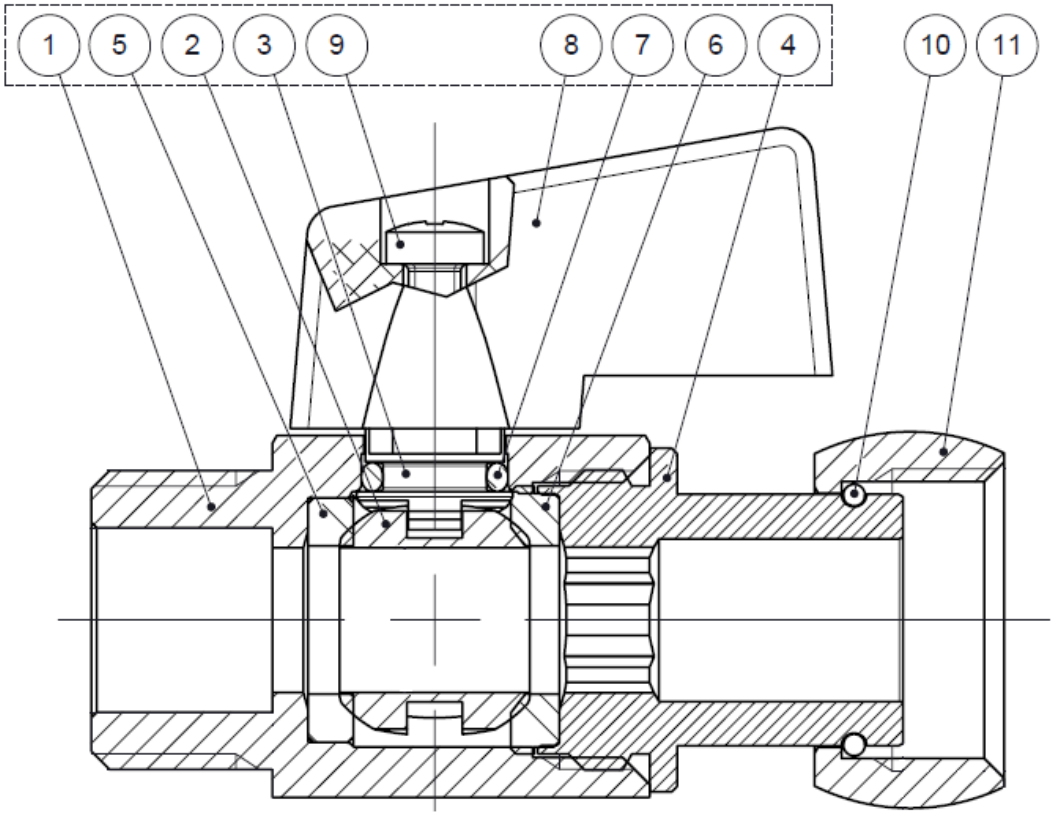

Item	Designation	Materials Ref.679
1	Body	Brass CW 617 N according to EN 12164 nickeled
2	Ball	Brass CW 617 N according to EN 12164
3	Stem	Brass CW 617 N according to EN 12164
4	Ends	Brass CW 617 N according to EN 12164
5	Seat	PTFE G200
6	Seat	PTFE G200
7	O ring	NBR
8	Handle	Zama nickeled
9	Screw	C4C according to EN 10263/03
10	Circlip	SS 304
11	Free nut	Brass CW 617 N according to EN 12164

Information provided as an indication and subject to possible modification

BRASS BALL VALVE FOR TOILET FLUSK TANK

MATERIALS REF.689 :

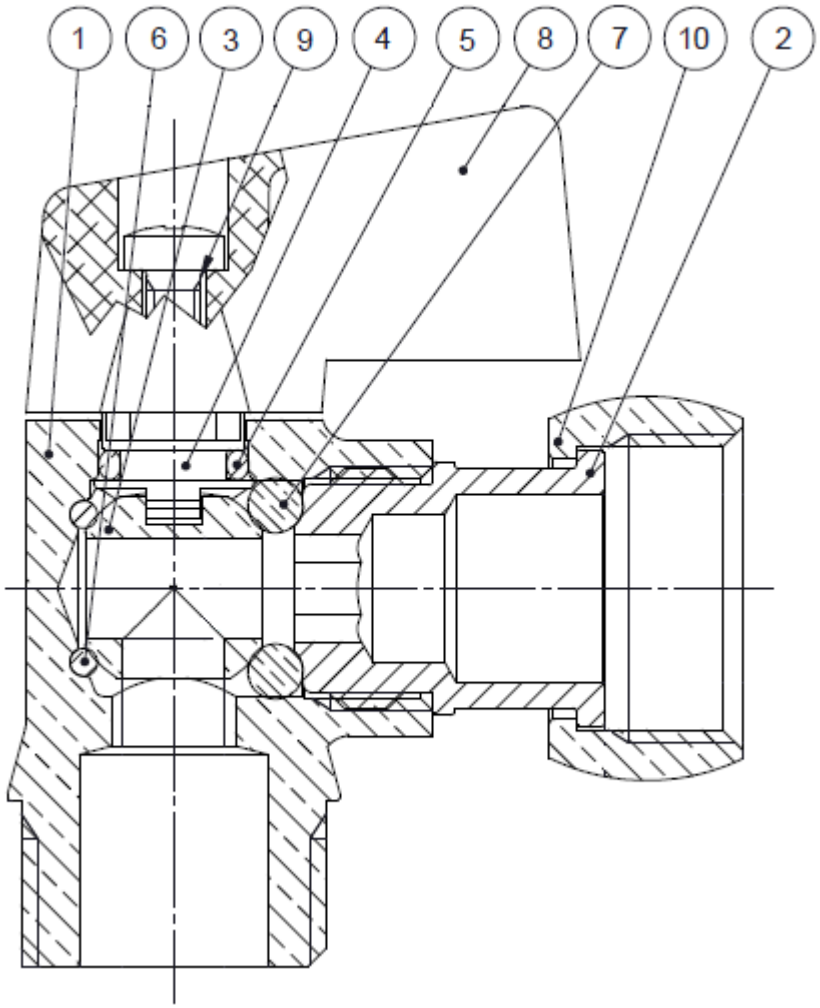

Item	Designation	Materials Ref.689
1	Body	Brass CW 617 N according to EN 12165 nickeled
2	Ends	Brass CW 614 N according to EN 12164
3	Ball	Brass CW 614 N according to EN 12164
4	Stem	Brass CW 614 N according to EN 12164
5	O ring	NBR
6	O ring	NBR
7	O ring	NBR
8	Handle	Zama nickeled
9	Screw	C4C according to EN 10263/03
10	Free nut	Brass CW 614 N according to EN 12164

BRASS BALL VALVE FOR TOILET FLUSK TANK

SIZE REF.679 (in mm) :

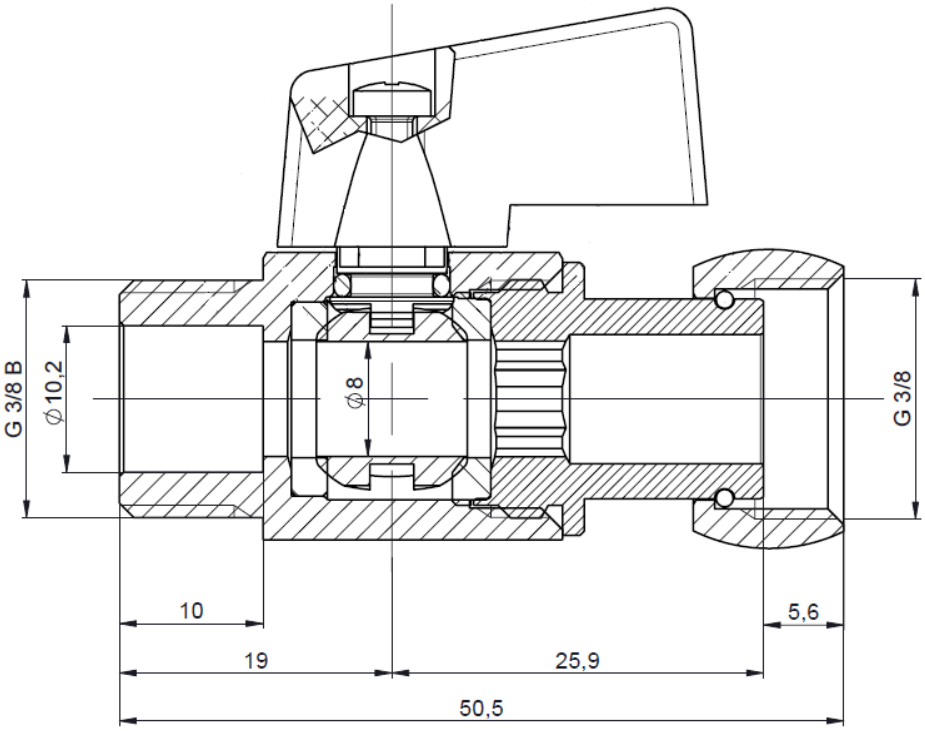

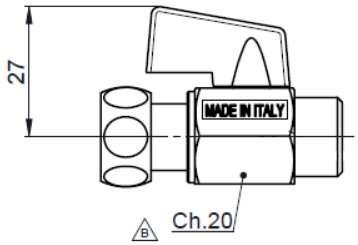

Ref.	DN	3/8"
679003	Weight (Kg)	0.094

BRASS BALL VALVE FOR TOILET FLUSK TANK

SIZE REF.689 (in mm) :

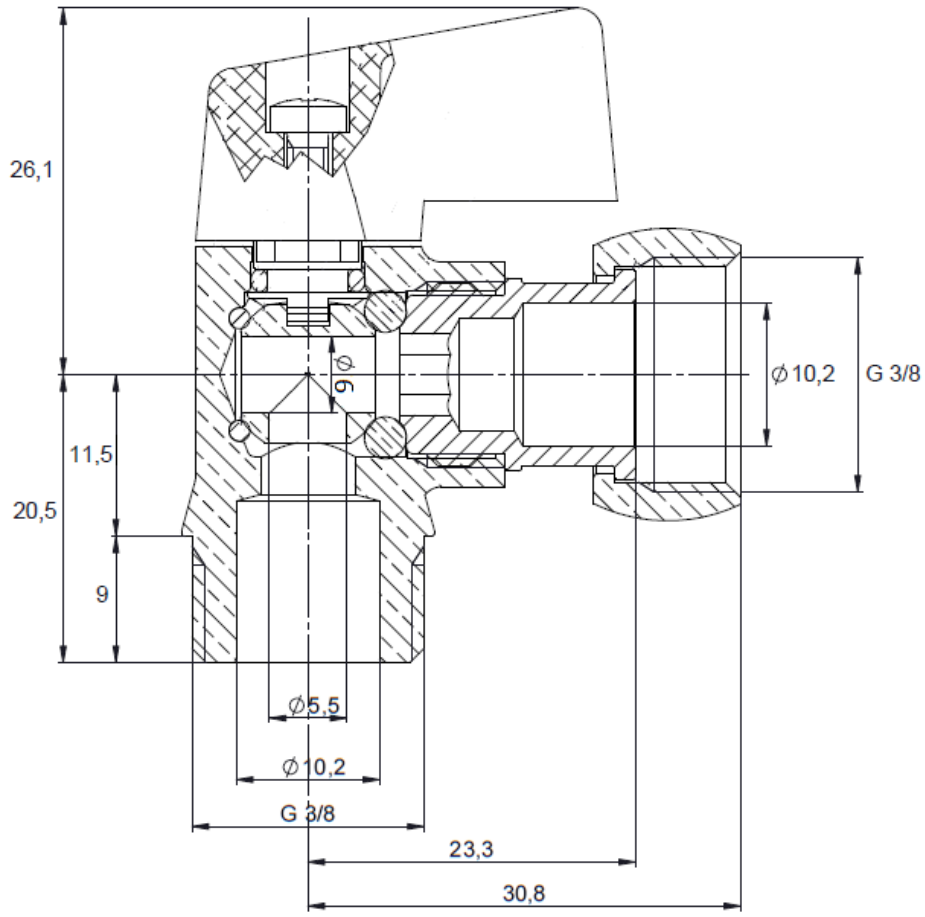

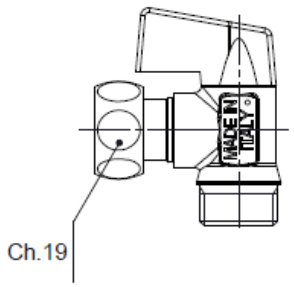

Ref.	DN	3/8"
689003	Weight (Kg)	0.083

BRASS BALL VALVE FOR TOILET FLUSK TANK

STANDARDS :

- Fabrication according to ISO 9001 : 2008

- **DIRECTIVE 97/23/CE** : Products excluded from directive (Article 1, § 3.2)

ADVICE : Our opinion and our advice are not guaranteed and SFERACO shall not be liable for the consequences of damages.
The customer must check the right choice of the products with the real service conditions.

BRASS BALL VALVE FOR TOILET FLUSK TANK

INSTALLATION

GENERAL GUIDELINES :

- Ensure that the valves to be used are appropriate for the conditions of the installation (type of fluid,pressure and temperature).
- Bes sure to have enough valves to be able to isolate the sections of piping as well as the appropriate equipment for maintenance and repair.
- Check the valves are installed according to existing standard.
- **Make the system so that it's possible to operate (open and close) regularly the valves (minimum 2 times per year).**

INSTALLATION

- **Before installation,pipe-line must be cleaned and free from residual of weldings,rubbish,shaving and every kind of extraneous materials.**
- **Pipe-line must be perfectly aligned and their support properly dimensioned so that there's no external.**
- **Check the lenght of the pipe-line,the valves and the wall tap connections because a deformation (dilatation, retractation) can occasion a leakage or can brake the valve.**
- **Before installation check the threaded ends so that they are cleaned.**
- **For sealing , use only PTFE.**
- **Do not tighten above a torque of 30 Nm.**
- **Use the right tools to avoid breaking the pieces.**
- **Never tighten the valves more than indicated and do not use the ends of the valves to tighten or place them.**
- **For the free nut types , use a spanner with a moderate torque.**
- **If mounting with PER tubing and hoses, it is necessary to support the tubes and hoses with the fixing to avoid strain on the valve.**

The advice and assembly instructions above do not conform to any guarantee.
The information is given in general.It states what must not and must be done.It is provided to ensure the safety of the personnel and the reliability of the valves.
The instructions in bold must be followed.

Information provided as an indication and subject to possible modification