IG514A

Inductive sensor

IGA4010-CPKG/V4A/US/3D

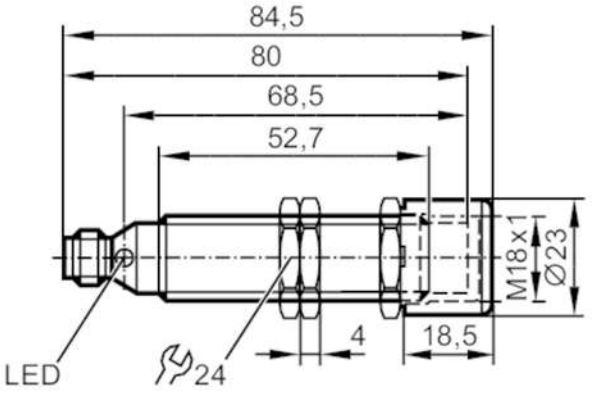

Product characteristics		
Electrical design		PNP
Output function		complementary
Sensing range	[mm]	10
Housing		threaded type
Dimensions	[mm]	M18 x 1 / L = 80
Application		
Installation		use in hazardous areas only with installed protective cover
Electrical data		
Operating voltage	[V]	10...30 DC
Current consumption	[mA]	< 20
Protection class		III
Reverse polarity protection		yes
Outputs		
Electrical design		PNP
Output function		complementary
Max. voltage drop switching output DC	[V]	2.5
Max. leakage current	[mA]	0.1
Permanent current rating of switching output DC	[mA]	100
Switching frequency DC	[Hz]	300
Short-circuit protection		yes
Type of short-circuit protection		pulsed
Overload protection		yes
Detection zone		
Sensing range	[mm]	10
Real sensing range Sr	[mm]	10 ± 10 %
Operating distance	[mm]	0...8.1

IG514A

Inductive sensor

IGA4010-CPKG/V4A/US/3D

Accuracy / deviations			
Correction factor		steel: 1 / stainless steel: 0.7 / brass: 0.4 / aluminium: 0.3 / copper: 0.2	
Hysteresis	[% of Sr]	1...20	
Switch point drift	[% of Sr]	-15...15	
Operating conditions			
Ambient temperature	[°C]	-20...60	
Protection		IP 67	
Tests / approvals			
ATEX marking		II 3D Ex tc IIIC T80°C Dc X	
EMC		EN 61000-4-2 ESD	4 kV CD / 8 kV AD
		EN 61000-4-3 HF radiated	3 V/m
		EN 61000-4-4 Burst	2 kV
		EN 61000-4-6 HF conducted	3 V
		EN 55011 emission	class B
MTTF	[years]	1326	
Mechanical data			
Weight	[g]	101.8	
Housing		threaded type	
Mounting		non-flush mountable	
Dimensions	[mm]	M18 x 1 / L = 80	
Thread designation		M18 x 1	
Materials		housing: stainless steel (1.4404 / 316L); sensing face: PBT orange; lock nuts: stainless steel; Protective cover: PA	
Displays / operating elements			
Display		switching status	4 x LED, yellow
Accessories			
Items supplied		lock nuts: 3	
		Protective cover: 1	
Remarks			
Pack quantity		1 pcs.	

Electrical connection - plug

Connector: 1 x M12; coding: A



IG514A

Inductive sensor

IGA4010-CPKG/V4A/US/3D

Connection

