Profile cylinder ISO 15552, PRA series

0822123006

AVENTICS Series PRA Profile cylinders (ISO 15552)

The AVENTICS Series PRA (ISO 15552) cylinders have a compact design profile with integrated sensor slots. The Series PRA (ISO 15552) cylinders can be used for all industries. This includes general automation technology, machine and systems construction, as well as specific industry applications.

- 6 mm T-slots and 4 mm C-slots allow for a large number of sensors to be mounted easily, quickly and compactly
- Available in piston diameters from 32 mm to 125 mm
- Modular sealing system allows for adaptability
- Advanced pneumatic end position cushioning
- Additional elastic damping elements
- Wide range of variants and accessories available in the configurator



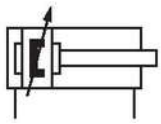

Technical data

Industry	Industrial
Standards	ISO 15552
Piston Ø	63 mm
Stroke	160 mm
Ports	G 3/8
Functional principle	Double-acting
Cushioning	Pneumatic adjustable cushioning
Magnetic piston	Piston with magnet
Environmental requirements	Industry standard ATEX optional
Piston rod thread - type	External thread
Piston rod thread	M16x1,5
Piston rod	single
Scraper	Standard Industry Scraper
Pressure for determining piston forces	6,3 bar
Retracting piston force	1765 N
Extracting piston force	1960 N
Min. ambient temperature	-20 °C
Max. ambient temperature	80 °C
Min. working pressure	1.5 bar

Max. working pressure	10 bar
Cushioning length	16.5 mm
Cushioning energy	27 J
Weight 0 mm stroke	1.42 kg
Weight +10 mm stroke	0.054 kg
Stroke max.	2500 mm
Medium	Compressed air
Min. medium temperature	-20 °C
Max. medium temperature	80 °C
Max. particle size	50 µm
Min. oil content of compressed air	0 mg/m³
Max. oil content of compressed air	5 mg/m³

Material

Piston rod	Stainless Steel
Scraper material	Polyurethane
Seal material	Polyurethane
Material, front cover	Die-cast aluminum
Cylinder tube	Aluminum
End cover	Die-cast aluminum
Nut for piston rod	Steel, chrome-plated
Part No.	0822123006

Technical information

ATEX-certified cylinders with identification II 2G Ex h IIC T4 Gb / II 2D Ex h IIIC T135°C Db_X can be generated in the Internet configurator.

The operating temperature range for ATEX-certified cylinders is -20°C ... 60°C.

The pressure dew point must be at least 15 °C less than ambient and medium temperature and may not exceed 3 °C.

The oil content of compressed air must remain constant during the life cycle.

Profile cylinder ISO 15552, PRA series

0822123006

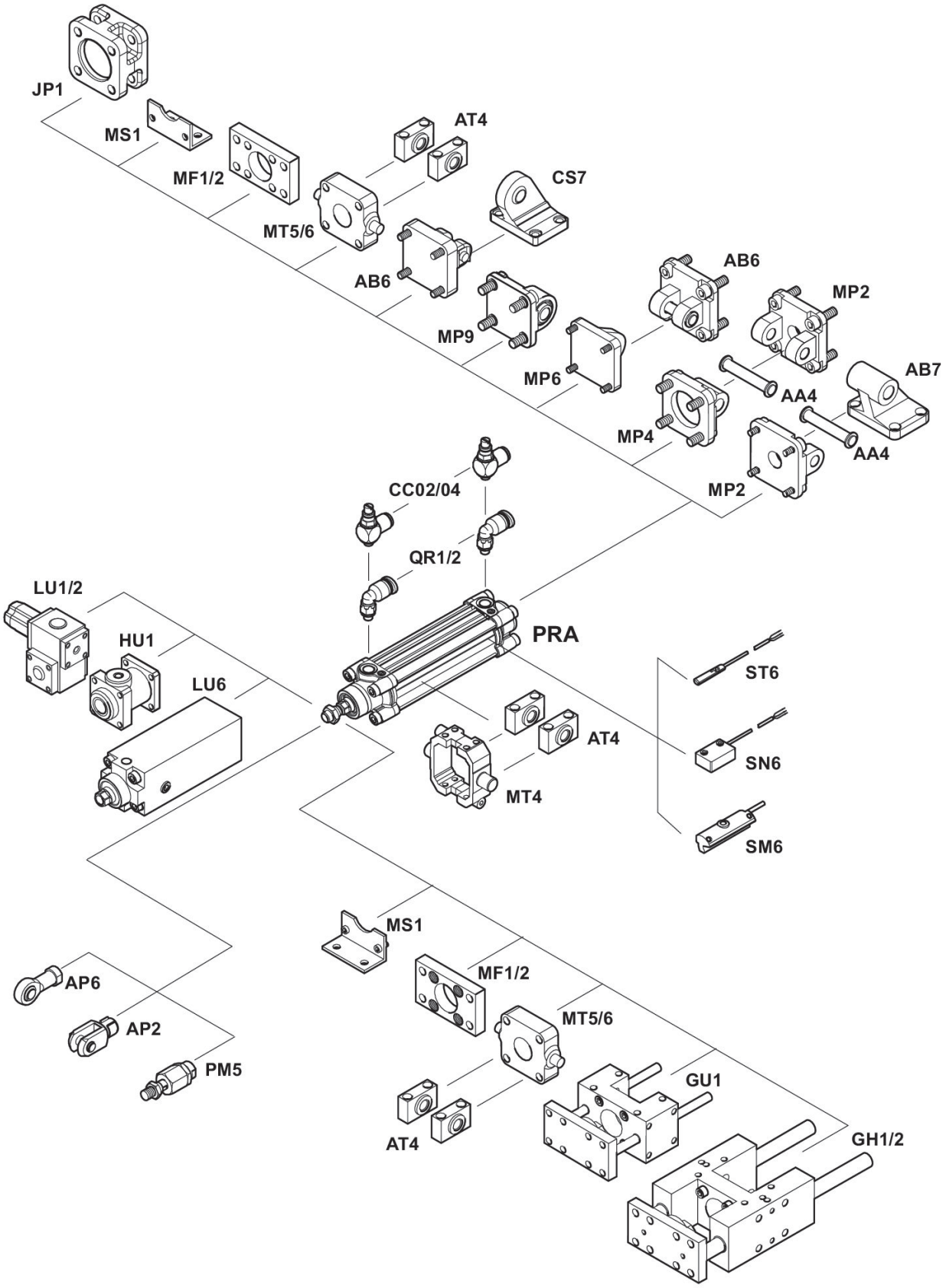

Cushioning diagram

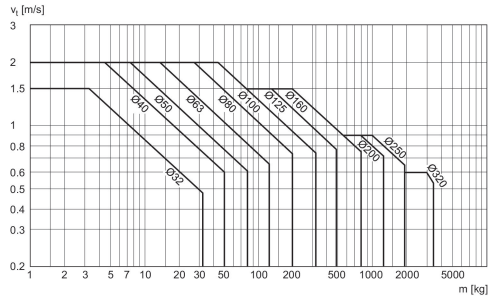

v_t = Piston velocity [m/s] m = Cushionable mass [kg]

Dimensions

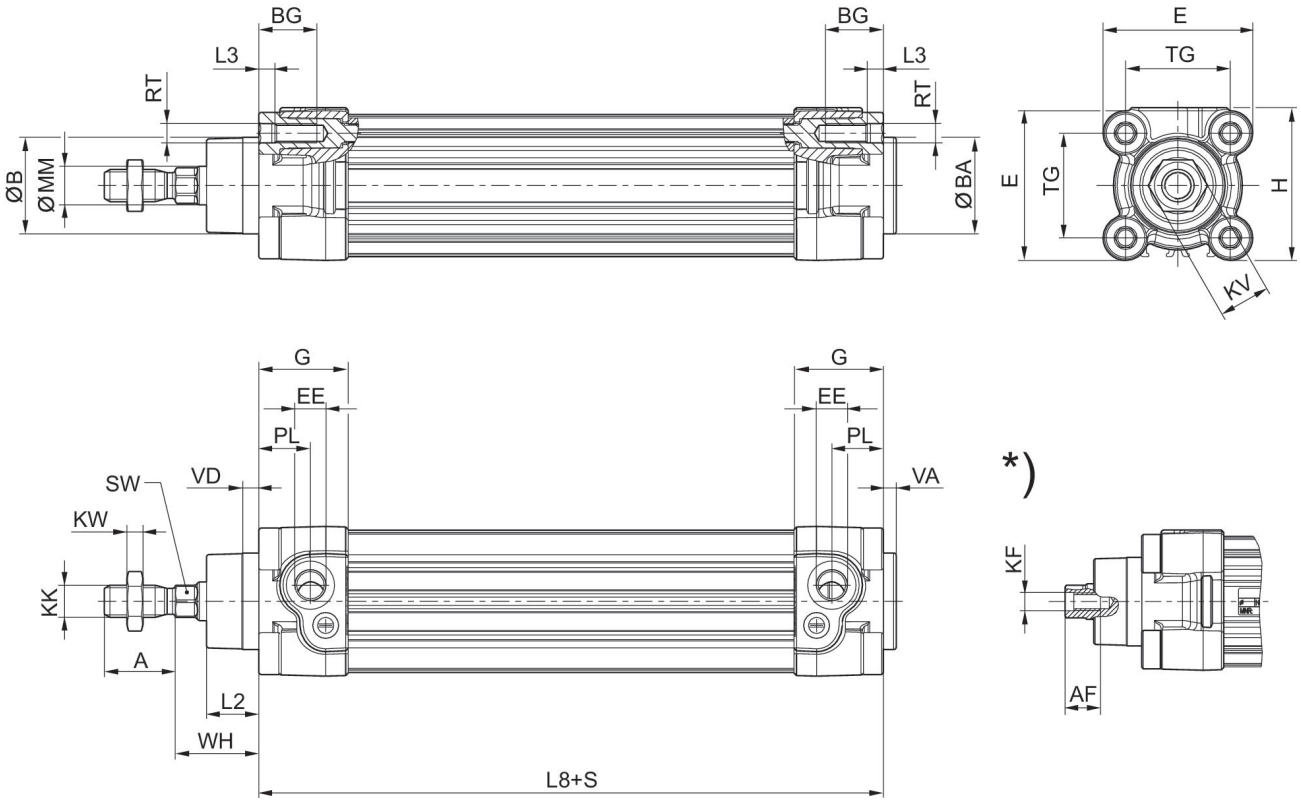

S = stroke
*) For cylinders with optional piston road with internal thread

Profile cylinder ISO 15552, PRA series

0822123006

Piston Ø	A -2	AF+1	ØB d11	ØBA d11	BG min.	E	EE	G	H	KF
32	22	12	30	30	16	46.5	G 1/8	27.75	47.5	M6
40	24	13.5	35	35	16	53	G 1/4	33.25	53	M8
50	32	17	40	40	16	65	G 1/4	31	65	M10
63	32	17	45	45	16	75	G 3/8	38.25	75	M10
80	40	21	45	45	17	95	G 3/8	38.25	95	M12
100	40	21	55	55	17	115	G 1/2	42.25	115	M12
125	54	28	60	60	20	140	G 1/2	53.85	140	M16

Piston Ø	KK	KV	KW	ØMM f8	PL	L2	L3 ±0,5	L8	RT	SW
32	M10x1,25	16	5	12	16	16.25	4.5	94±0,4	M6	10
40	M12x1,25	18	6	16	20	18.25	4.5	105±0,7	M6	13
50	M16x1,5	24	8	20	19	25	4.5	106±0,7	M8	17
63	M16x1,5	24	8	20	24	25	4.5	121±0,8	M8	17
80	M20x1,5	30	10	25	23.5	33	0	128±0,8	M10	22
100	M20x1,5	30	10	25	25	36	0	138±1	M10	22
125	M27x2	41	13.5	32	33	45	0	160±1	M12	27

Piston Ø	TG	VA -1	VD	WH
32	32,5±0,5	4	5	26±1,4
40	38±0,5	4	5	30±1,4
50	46,5±0,6	4	5	37±1,4
63	56,5±0,7	4	5	37±1,8
80	72±0,7	4	5	46±1,8
100	89±0,7	4	5	51±1,8
125	110±1,1	6	7	65±2,2