Gas Control Equipment



HIGH-PERFORMANCE CYLINDER REGULATOR

FG300

GCE FG300 is the reliable partner of each user in the welding workshop. It will never make the operator disappointed leaving him without a proper gas supply. By its performance, it covers the majority of all industrial gas applications with gas cylinder use. It protects the surrounding area by keeping it insulated from the high gas pressure and supplying only the wished amount of the gas at pressure adjusted by a user.



Variants with side entry, bottom entry, pressure gauges, and flow meter fulfill all the requested tasks.

Cylinder regulator FG300 is made in Europe.

It has been created to help make the production process safe and efficient.

GCE® FG300

PRODUCT FEATURES

- High-performance regulator following all common technical gas applications needs.
- Safety focused design following **ISO 2503.**
- **Prolonged lifetime** saving costs related to services, spares and replacements.
- Encapsulated regulating technology for precise and stable control.
- Easy handling for the operator by ergonomic arrangement.
- Side and Bottom entry design variants fit on all types of cylinder valves.
- Three scale pressure gauges acc. to ISO 5171 with high contrast pointer for better gas pressure clarity.
- Made in Europe.

TECHNICAL DATA

Gas	O_2, N_2, H_2, He	Ar, Ar/CO_2	Acetylene	Propane
Body	Brass forged			
Bonnet	Zn/Al alloy Die Cast			
Stems, nuts and fittings	Brass			
Diaphragm	EPDM			NBR
Seat sealing	PA		CR	
Inlet/ Outlet connection	Gas specific connection			
Maximal inlet pressure	200 or 300 bar		25 bar	
Outlet pressure/ flow range	0-10 bar	0-16l/min 0-24l/min 0-30l/min 0-40l/min	1,5 bar	4 bar
Temperature range	From -20°C to 60°C			
Weight	Approx. according to gas variant: 1,9 kg			

FLOW CHARTS

Compressed gases 300/10 bar (measured by air)

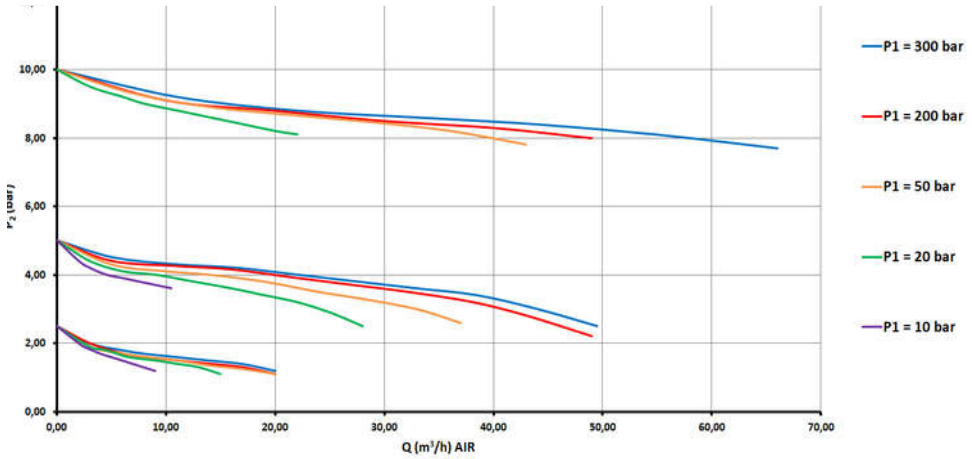

Flow of the gas (A)

A=Q*f

Q… Air Flow

f… Conversion coefficient

Conversion coefficient							
Test gas	Air	Oxygen	Nitrogen	Argon	Hydrogen	Helium	CO_2
Air	1	0,950	1,02	0,851	3,81	2,695	0,808

FG300

FLOW CHARTS

Propane 25/4 bar

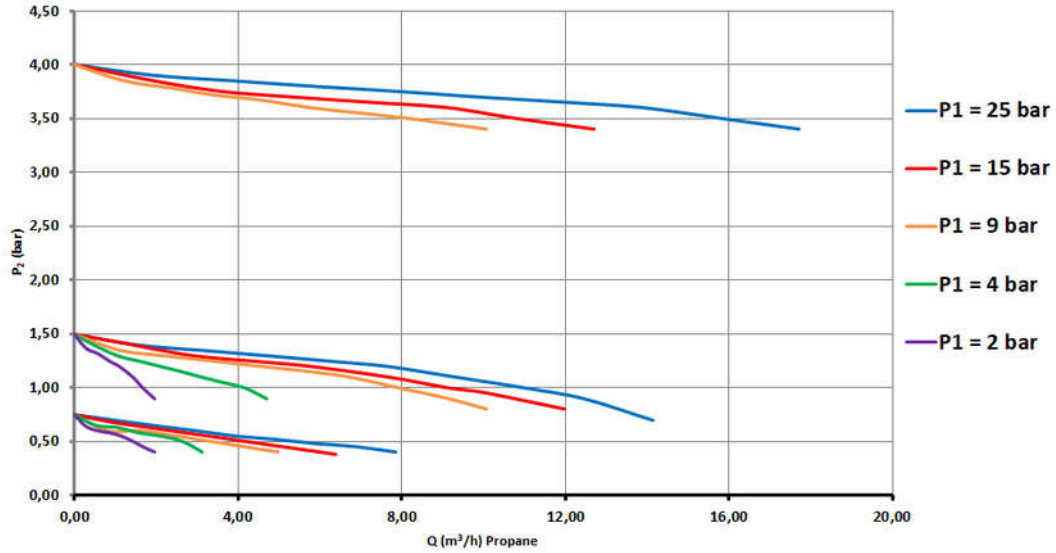

Acetylene 25/1,2 bar

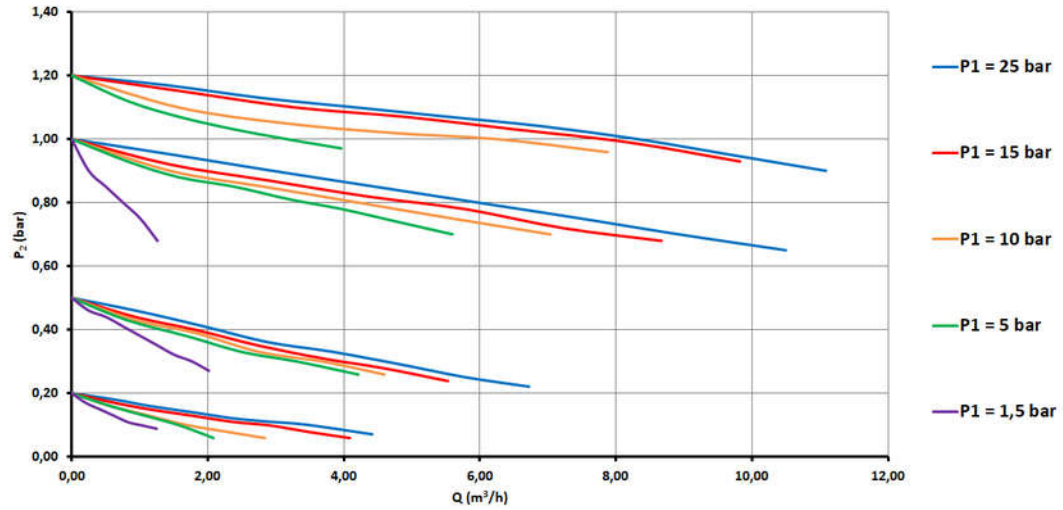

Oxygen 300/4 bar

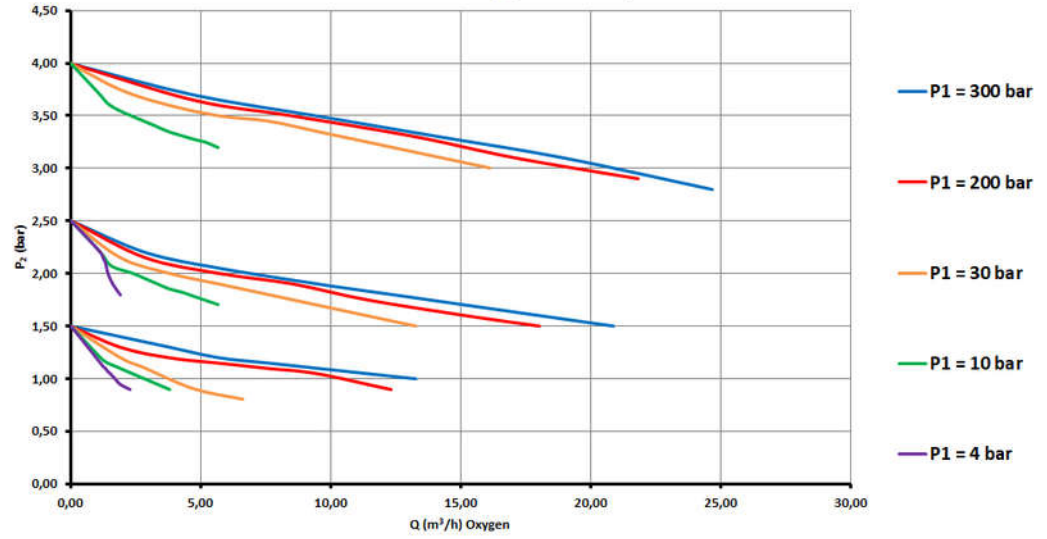

FG300

DIMENSIONS

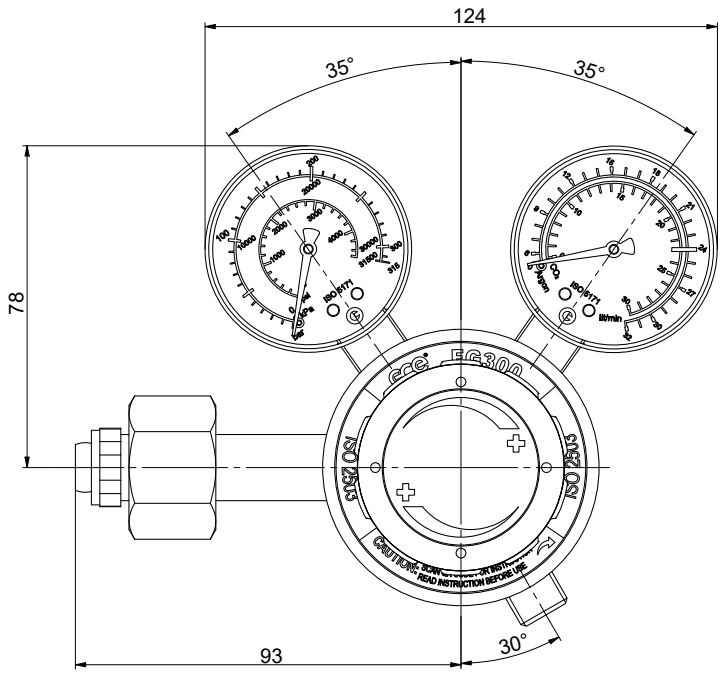

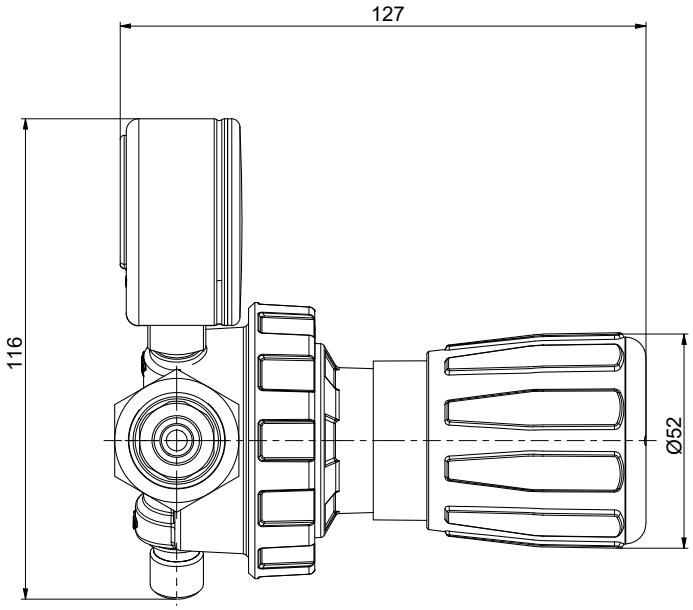

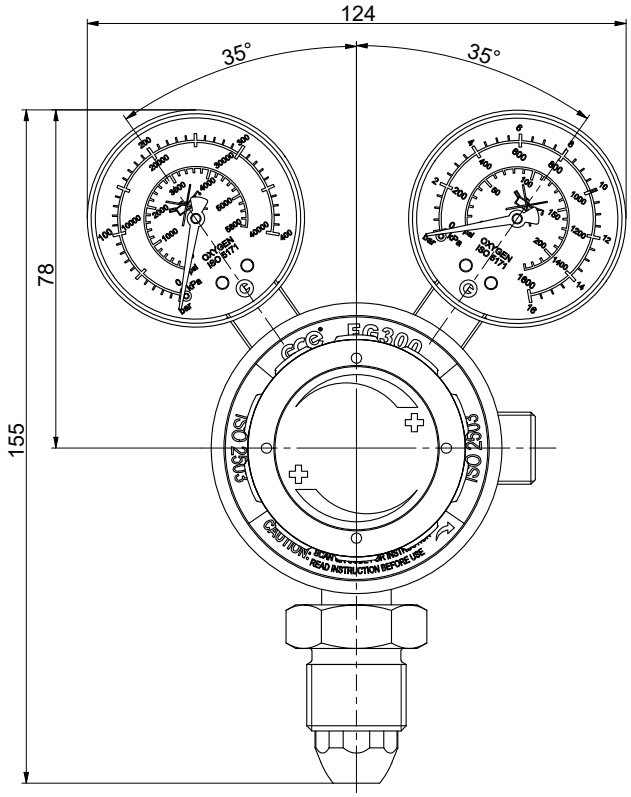

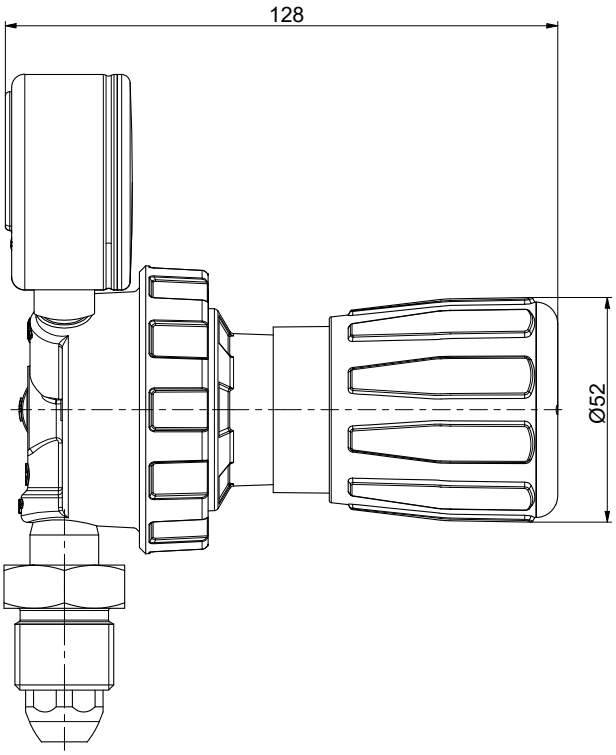

FG300

PRODUCT ADVANTAGES

Triple scale gauges
ACCORDING TO ISO 5171, WITH HIGH CONTRAST POINTER FOR BETTER GAS PRESSURE CLARITY



Encapsulated regulating valve technology.
ENCAPSULATED REGULATING TECHNOLOGY FOR PRECISE PARAMETERS AND STABILITY, TESTED FOR MANY YEARS

Inlet connection
SIDE AND BOTTOM VARIANTS AVAILABLE, VARIANTS FIT ON ALL TYPES OF CYLINDER VALVES

Colour coded handwheel
SIMPLE IDENTIFICATION OF THE GAS, ERGONOMIC AND ROBUST DESIGN, EASY HANDLING FOR OPERATOR

FG300

ORDERING INFORMATION

Article number	Gas	Inlet position	Inlet pressure	Outlet pressure	Inlet connection	Outlet connection	Type
FS21650001	OXYGEN	bottom	300 bar	4 bar	G5/8" BSP	G3/8" BSP	
FS21650002	OXYGEN	side	300 bar	4 bar	G5/8" BSP	G3/8" BSP	
FS21650003	OXYGEN	bottom	300 bar	10 bar	G5/8" BSP	G3/8" BSP	
FS21650004	OXYGEN	side	300 bar	10 bar	G5/8" BSP	G3/8" BSP	
FS21650005	OXYGEN	bottom	300 bar	10 bar	G5/8" BSP	G3/8" BSP	no gauge
FS21650006	ACETYLENE	bottom	25 bar	1,5 bar	G5/8" LH BSP	G3/8" LH BSP	no gauge
FS21650007	ACETYLENE	bottom	25 bar	1,5 bar	G5/8" LH BSP	G3/8" LH BSP	
FS21650008	ACETYLENE	side	25 bar	1,5 bar	G5/8" LH BSP	G3/8" LH BSP	
FS21650009	PROPANE	side	25 bar	4 bar	G5/8" LH BSP	G3/8" LH BSP	no gauge
FS21650010	Ar/CO_2	bottom	300 bar	0 - 40 l/min	G5/8" BSP	G3/8" BSP	
FS21650011	Ar/CO_2	side	300 bar	0 - 40 l/min	G5/8" BSP	G3/8" BSP	
FS21650012	Ar/CO_2	bottom	300 bar	4,5 bar PRESET	G5/8" BSP	G3/8" BSP	HP gauge only
FS21650019	PROPANE	side	25 bar	4 bar	G5/8" LH BSP	G3/8" LH BSP	LP gauge only

FLOWMETERS

Article number	Gas	Flow	Working pressure	Inlet connection	Outlet connection
0870776	Ar/CO_2	16 l/min	4,5 bar	G3/8"	G3/8"
0870673	Ar/CO_2	30 l/min	4,5 bar	G3/8"	G3/8"



Art. Nr. 735100001451 Edition 1/2021. Alterations are subject to change without notice. 23042021md © 2021

Gas Control Equipment