Product datasheet
Characteristics

XCKD3945P16EX
limit switch XCKD - roller lever plunger - 2NC + NO - ATEX/IECEx



Main

Range of product	OsiSense ATEX D
Series name	Standard format
Product or component type	Limit switch
Device short name	XCKD
Sensor design	Compact
Body type	Fixed
Head type	Rotary head
Material	Metal
Fixing mode	By the body
Movement of operating head	Rotary
Type of operator	Spring return roller lever thermoplastic variable length
Switch actuation	By 30° cam
Type of approach	Lateral approach, 2 directions
Electrical connection	Screw-clamp terminals, clamping capacity: 1 x 0.34...2 x 0.75 mm²
Cable entry number	1 tapped entry for M16 x 1.5 cable gland (included) 4…8 mm
Number of poles	3
Contacts type and composition	2 NC + 1 NO
Contacts insulation form	Zb
Contact operation	Snap action
Number of steps	1
Positive opening	With
Minimum torque for tripping	0.1 N.m
Maximum actuation speed	1.5 m/s
IP degree of protection	IP66 conforming to IEC 60529 IP67 conforming to IEC 60529

Disclaimer: This documentation is not intended as a substitute for and is not to be used for determining suitability or reliability of these products for specific user applications

Complementary

Body material	Zamak
Head material	Zamak
Positive opening minimum torque	0.25 N.m
Minimum actuation speed	0.01 m/min
Contact code designation	B300, AC-15 (Ue = 240 V), Ie = 1.5 A conforming to EN 60947-5-1 B300, AC-15 (Ue = 240 V), Ie = 1.5 A conforming to IEC 60947-5-1 appendix A R300, DC-13 (Ue = 250 V), Ie = 0.1 A conforming to EN 60947-5-1 R300, DC-13 (Ue = 250 V), Ie = 0.1 A conforming to IEC 60947-5-1 appendix A
[Ithe] conventional enclosed thermal current	6 A AC
[Ui] rated insulation voltage	300 V conforming to UL 508 400 V (pollution degree 3) conforming to IEC 60947-1 300 V conforming to CSA C22.2 No 14
Maximum resistance across terminals	25 MOhm conforming to IEC 60255-7 category 3
[Uimp] rated impulse withstand voltage	IEC 60664 4 kV IEC 60947-1 4 kV
Short-circuit protection	6 A cartridge fuse, type gG
Electrical durability	5000000 cycles, DC-13, inductive load type, 120 V, 2 W, operating rate <3600 cyc/mn, load factor: 0.5, DC conforming to IEC 60947-5-1 appendix C 5000000 cycles, DC-13, inductive load type, 24 V, 4 W, operating rate <3600 cyc/mn, load factor: 0.5, DC conforming to IEC 60947-5-1 appendix C 5000000 cycles, DC-13, inductive load type, 48 V, 3 W, operating rate <3600 cyc/mn, load factor: 0.5, DC conforming to IEC 60947-5-1 appendix C
Mechanical durability	10000000 cycles
Marking	II2 D-Ex tb IIIC T85°C Db IP66/67
Width	31 mm
Height	65 mm
Depth	30 mm

Environment

Shock resistance	50 gn for 11 ms conforming to IEC 60068-2-27
Vibration resistance	25 gn (f= 10…500 Hz) conforming to IEC 60068-2-6
Electrical shock protection class	Class I conforming to IEC 61140 Class I conforming to NF C 20-030
Ambient air temperature for operation	-20…60 °C
Protective treatment	TC
Dust zone	Zone 21 - 22
Product certifications	INERIS 04ATEX0014X IEC-Ex INE 17.0020X
Standards	EN/IEC 60079-31 EN/IEC 60079-0
Directives	2014/34/EU - ATEX directive

Packing Units

Package 1 Weight	270 g
Package 2 Weight	3.782 kg

Offer Sustainability

Sustainable offer status	Green Premium product
REACh Regulation	REACh Declaration
EU RoHS Directive	Pro-active compliance (Product out of EU RoHS legal scope) EU RoHS Declaration
Mercury free	Yes
RoHS exemption information	Yes

Environmental Disclosure	Product Environmental Profile

Contractual warranty

Warranty	18 months

XCKD3945P16EX

Dimensions

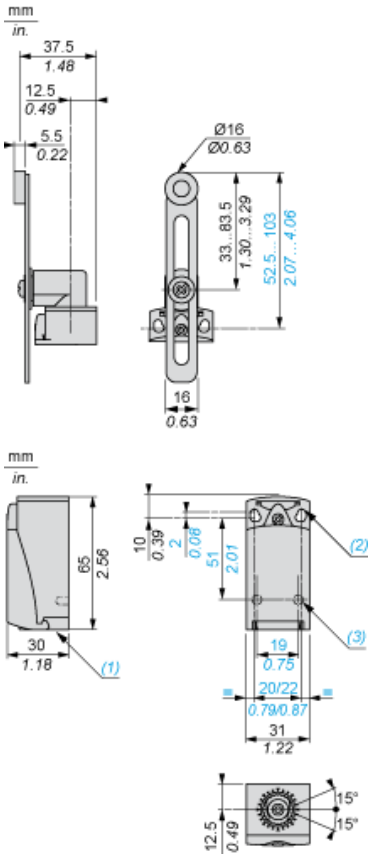

(1) Tapped entry for M16 x 1.5
(2) 2 elongated holes Ø 4.3 x 6.3 mm on 22 mm centres, 2 holes Ø 4.3 on 20 mm centres.
(3) 2 x Ø 3 holes for support studs, depth 4 mm.

Mounting with Cable Entry

Position of Cable Gland

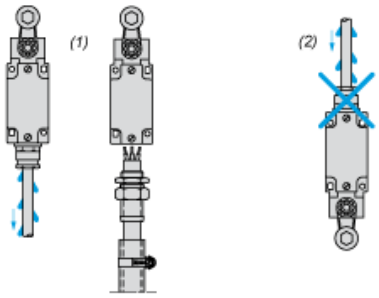

(1) Recommended
(2) To be avoided

Mounting with Rotary Heads and Levers

Type of Cam

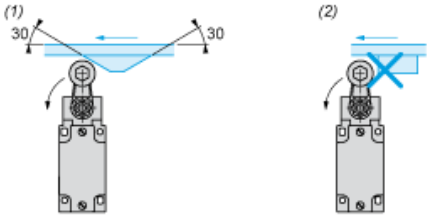

(1) Recommended
(2) To be avoided

Setting-up with Head ZCE01 and ZCE09

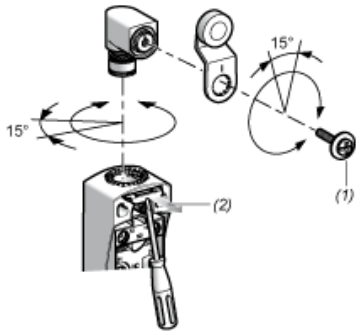

(1) Tightening torque (Min : 1) (Max : 1.5)
(2) Tightening torque (Min : 0.8) (Max : 1.2)

Wiring Diagram

3-pole NC + NC + NO Snap Action

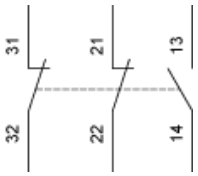

Characteristics of Actuation

Switch Actuation by 30° Cam

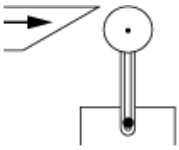

Functionnal Diagram

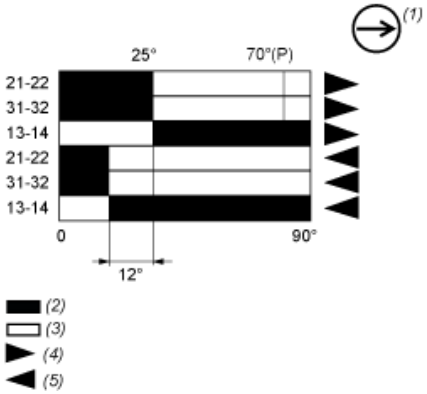

(P) Positive opening point
(1) NC contact with positive opening operation
(2) Closed
(3) Open
(4) Tripping
(5) Resetting