IGM215

Inductive sensor

IGKC008BATKG/M/0.8M/PH

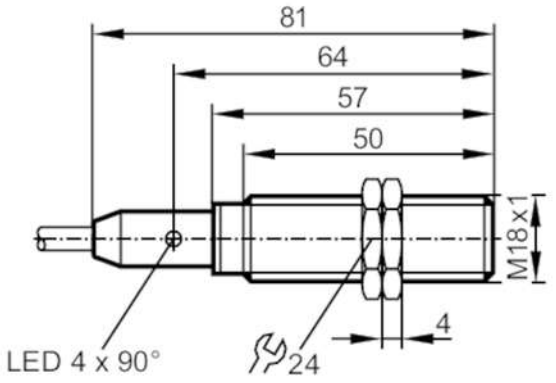

Product characteristics		
Electrical design		PNP/NPN
Output function		normally open
Sensing range	[mm]	8
Dimensions	[mm]	M18 x 1 / L = 81
Application		
Special feature		Increased sensing range
Application		Use in mobile and harsh applications
Electrical data		
Operating voltage	[V]	10...36 DC
Current consumption	[mA]	< 10
Protection class		II
Reverse polarity protection		yes
Outputs		
Electrical design		PNP/NPN
Output function		normally open
Max. voltage drop switching output DC	[V]	2.5
Minimum load current	[mA]	2; (only in 2-wire operation)
Max. leakage current	[mA]	0.5; (only in 2-wire operation)
Permanent current rating of switching output DC	[mA]	100
Switching frequency DC	[Hz]	200
Short-circuit protection		yes
Type of short-circuit protection		pulsed
Overload protection		yes
Detection zone		
Sensing range	[mm]	8
Operating distance	[mm]	0...6.48

IGM215

Inductive sensor

IGKC008BATKG/M/0.8M/PH

Increased sensing range			yes
Accuracy / deviations			
Correction factor			steel: 1 / stainless steel: 0.7 / brass: 0.5 / aluminium: 0.45 / copper: 0.35
Hysteresis	[% of Sr]		1...20
Operating conditions			
Ambient temperature	[°C]		-40...85
Protection			IP 67; IP 69K
Tests / approvals			
EMC		noise immunity according to DIN ISO 11452-2	100 V/m
		conducted interference acc. to ISO 7637-2	
		pulse	1 2 3a 3b 4 5
		severity level	IV IV IV IV IV IV
		failure criterion	C C A A A C
		EN 61000-4-2 ESD	4 kV CD / 8 kV AD
		EN 61000-4-3 HF radiated	10 V/m
		EN 61000-4-4 Burst	2 kV
		EN 61000-4-5 Surge	0,5 kV line to line, Ri: 2 Ohm
		EN 61000-4-6 HF conducted	10 V
		EN 55011	class B
Continuous shock resistance		EN 60068-2-27	40 g 6 ms; 4000 shocks each in every direction of the 3 coordinate axes / -20...50 °C
Fast temperature change		EN 60068-2-14 Na	TA = -40 °C; TB = 85 °C; t1 = 30 min; t2 = < 10 s; 50 cycles
Salt spray test		EN 60068-2-52 Kb	severity level 5 (4 test cycles)
MTTF	[years]		1192
Mechanical data			
Weight	[g]		87.2
Mounting			flush mountable
Dimensions	[mm]		M18 x 1 / L = 81
Thread designation			M18 x 1
Materials			housing: stainless steel (1.4404 / 316L); sensing face: LCP
Tightening torque	[Nm]		50
Displays / operating elements			
Display		switching status	4 x 90° LED, yellow
Accessories			
Items supplied			lock nuts: 2
Remarks			
Pack quantity			1 pcs.

IGM215

Inductive sensor

IGKC008BATKG/M/0.8M/PH

Electrical connection

Cable: 0.8 m, PUR; burning behaviour to ECE R118 rev. 2; 3 x 0.5 mm²

Connection

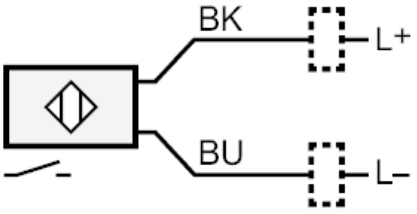

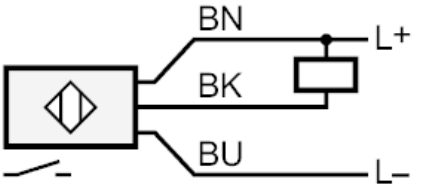

	Core colours
BK	black
BN	brown
BU	blue