Brand of NTN corporation

Technical data



6007F604

Single row deep groove ball bearings

TOPLINE deep groove ball bearing, radial contact, pressed steel cage, shields on both sides, applications up to 350°C.

TOPLINE

VISUAL (S)

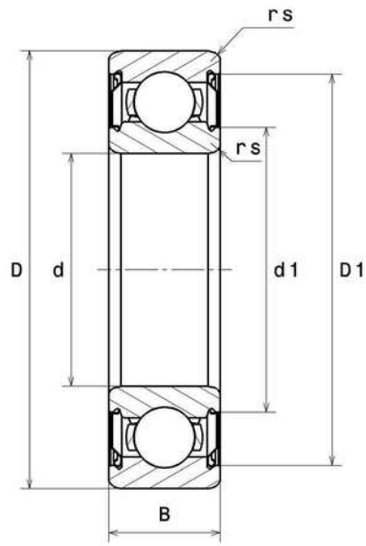

6007F604
Single row deep groove ball bearings

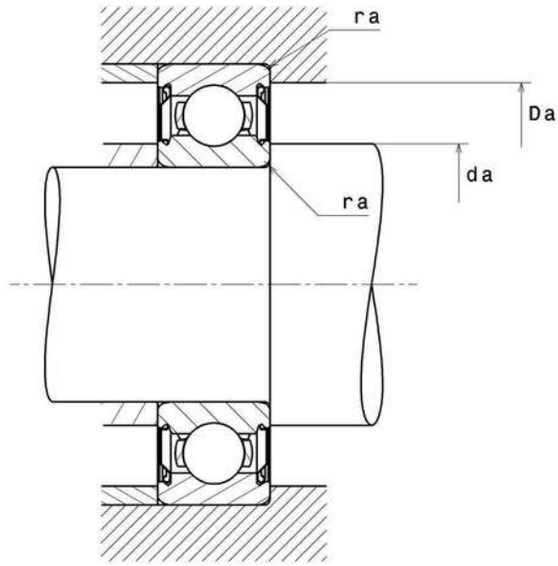

PRODUCT DEFINITION	
Brand	SNR
d - Internal diameter	35 mm
D - External diameter	62 mm
B - Bearing/Inner ring width	14 mm
d1 - External diameter inner ring	43,5 mm
D1 - Inner diameter outer ring	55,9 mm
rs - Min fillet radius	1 mm
Radial clearance class	> C5
Mass	0,151 kg

PRODUCT PERFORMANCE	
C0 - Static load	10300000 mN
f0 - Coefficient	14.8
N lim - Mechanical Limit Speed	540 °/s

PRODUCT PERFORMANCE	
Tmin - Min operating temperature	243,15 °K
Tmax - Max operating temperature	623,15 °K

BEARING FREQUENCIES	
BPFO - Over rolling frequency on outer ring (60 rpm)	4.6 Hz
BPFI - Over rolling frequency on inner (60 rpm)	6.4 Hz
BSF - Over rolling frequency on rolling element (60 rpm)	5.946 Hz
BRF - Rotational frequency – rolling element (60 rpm)	2.973 Hz
FTF - Rotational frequency - cage (60 rpm)	0.418 Hz

ABUTMENT	
da min - Min shoulder diameter IR	40 mm
Da max - Max shoulder diameter OR	57 mm
ra max - Max shaft & housing fillet radius	1 mm

INDUSTRY CALCUL FACTORS

Equivalent dynamic radial load

P = X.Fr + Y.Fa

$\frac{f_0 F_a}{C_0}$	e	Fa / Fr ≤ e		Fa / Fr > e	
		X	Y	X	Y
0.172	0.19	1	0	0.56	2.3
0.345	0.22				1.99
0.689	0.26				1.71
1.03	0.28				1.55
1.38	0.3				1.45
2.07	0.34				1.31
3.45	0.38				1.15
5.17	0.42				1.04
6.89	0.44				1

Equivalent static radial load

Po = Xo.Fr + Yo.Fa

X_0	Y_0
0.6	0.5

For single or DT bearing arrangement :

If Po <Fr, then use Po = Fr