U.53T - Separators

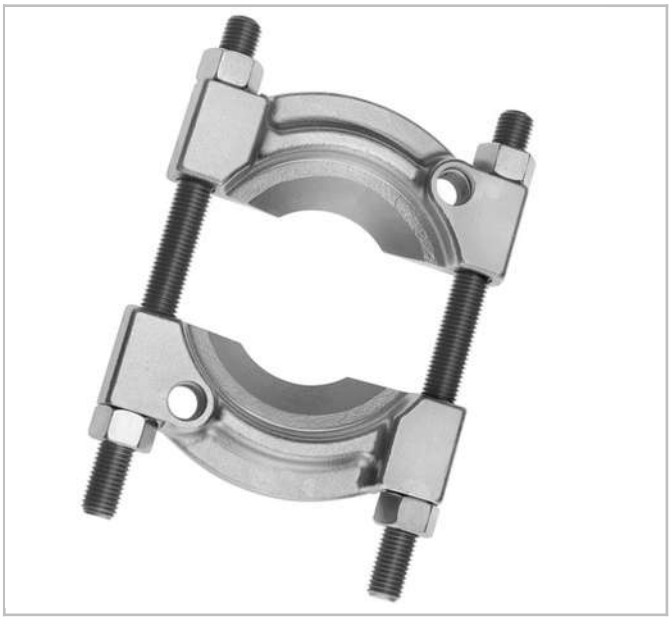

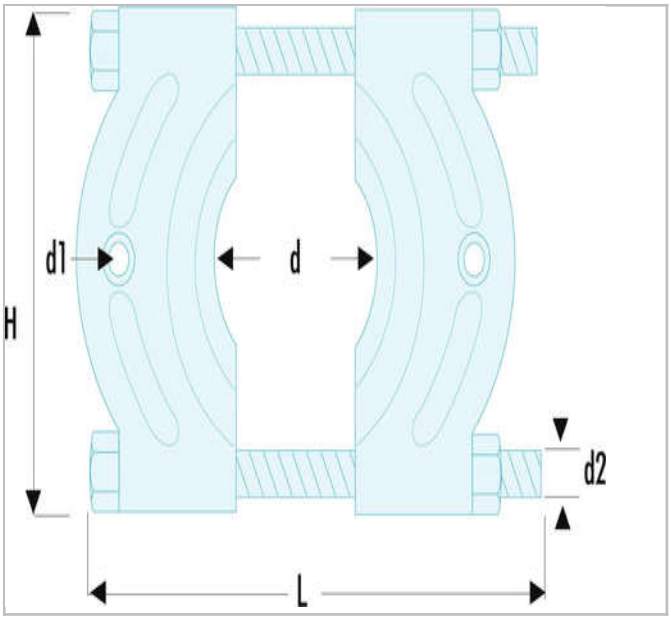

Description:

- Separators spread Ø 5 to 250 mm.
- Fit behind races where ordinary puller claws will not reach.
- They can be used with beams assisted by screws or jacks.

© FACOM 2020

	Diameter D Mini - Maxi [mm]	Diameter D1 [mm]	Diameter D2 [mm]	Length L [mm]	Height H [mm]	Screw Size ["]	Weight [Kg]
U.53T1	5 - 60	M10	M12	140.0	91.0	U.53T1-02	0.6
U.53T2	15 - 110	M16	M16	215.0	153.0	U.53T2-02	2.1
U.53T3	15 - 150	M20	M20	290.0	204.0	U.53T3-02	4.6
U.53T4	20 - 180	M22	M22	360.0	289.0	U.53T4-02	8.2
U.53T5	25 - 250	M22	M22	430.0	316.0	U.53T5-02	11.2

© FACOM 2020