S300P
Data sheet



System pro *M* compact®
S300P miniature circuit breakers comply with IEC/EN 60947-2, IEC/EN 60898-1, UL 1077 and CSA 22.2 No. 235, protecting the installation in commercial and industrial applications by supporting a breaking capacity of 25 kA.

—
01

—
01
S300P
Miniature Circuit Breaker

S300P MCB is designed to be used in installations where high breaking capacities are required to protect against short-circuits and overloads.

S300P is compliant to the product standards
IEC/EN 60947-2
IEC/EN 60898-1
UL 1077
CSA 22.2 No.235
and features the following main technical characteristics:

- Rated nominal current: 0.2 A ... 63 A
- Characteristic: B, C, D, K, Z
- Pole variant: 1, 2, 3, 4, 1+N, 3+N
- Rated breaking capacity I_{cu}: 25 kA; 100 kA (≤ 6 A)
- Rated operational voltage U_e: 240/415 V AC
- Rated impulse withstand voltage U_{imp}: 6 kV

Application benefits

- Integrated trip indicator for clear signalization of tripping events on site
- Dual DIN-Rail release for fast and easy installation
- Fully compatible with whole range of System pro *M* compact® accessories supporting lots of different functions
- Quick and easy product identification by QR-code along with direct access to the ABB product database
- Terminals equipped with fail safe feature to avoid improper installation
- Supply possible from top or bottom and in parallel with cables and busbars thanks to terminals composed by two different openings
- Excellent technical performance to ensure safety and protection of installation and personal
- Certified quality and compliance according to worldwide product standards

S300P
Technical data



S300P

		S300P
General Data	Standards	IEC/EN 60947-2, IEC/EN 60898-1, UL 1077, CSA 22.2 No. 235
	Poles	1P, 2P, 3P, 4P, 1+N, 3+N
	Tripping characteristics	B, C, D, K, Z
	Rated current I_n	6…63 A (B-curve), 0.5…63 A (C-, D-, Z-curve), 0.2…63 A (K-curve)
	Rated frequency f	50 / 60 Hz, DC
	Rated insulation voltage U_i acc. to IEC/EN 60664-1	500 V AC
	Overvoltage category	IV
	Pollution degree	3
Data acc. to IEC/EN 60947-2	Tripping Characteristics	B, C, D, K, Z
	Rated operational voltage U_e	1P, 1+N: 240 V AC, 72 V DC 2P: 415 V AC, 125 V DC 3P, 3+N, 4P: 415 V AC
	Max. power frequency recovery voltage U_{max}	1P, 1+N: 264 V AC, 72 V DC 2P, 3P, 3+N, 4P: 462 V AC, 125 V DC
	Min. operating voltage	12 V AC – 12 V DC
	Rated ultimate short-circuit breaking capacity I_{cu}	25 kA; 100 kA (≤ 6 A)
	Rated service short-circuit breaking capacity I_{cs}	12.5 kA (≤ 25 A); 10 kA (32-40 A); 7.5 kA (>40 A)
	Rated impulse withstand voltage U_{imp} (1.2/50 µs)	6 kV
	Reference temperature for tripping characteristics	55 °C (B-, C-, D-curve), 40 °C (K-, Z-curve)
	Electrical endurance	I_n < 32 A: 20,000 ops. (AC), I_n ≥ 32 A: 10,000 ops. (AC); 1,500 ops. (DC)
Data acc. to IEC/EN 60898-1	Tripping Characteristics	B, C, D
	Rated operational voltage U_n	1P: 240/415 V AC, 72 V DC 1+N: 240 V AC, 72 V DC 2P: 415 V AC, 125 V DC 3P, 3P+N, 4P: 415 V AC
	Max. power frequency recovery voltage U_{max}	1P, 1+N: 264 V AC, 72 V DC 2P, 3P, 3+N, 4P: 457 V AC, 125 V DC
	Min. operating voltage	12 V AC – 12 V DC
	Rated short-circuit capacity I_{cn}	25 kA (≤ 25 A), 20 kA (32 - 40 A), 15 kA (> 40 A)
	Dielectric test voltage	2.0 kV (50/60 Hz, 1 min)
	Reference temperature for tripping characteristics	30 °C
	Electrical endurance	I_n < 32 A: 20,000 ops. (AC), I_n ≥ 32 A: 10,000 ops. (AC); 1,000 ops. (DC)
Data acc. to UL1077 / CSA 22.2 No. 235	Tripping Characteristics	B, C, D, K, Z
	Rated voltage	1P: 277 V AC, 60 V DC 2...4P: 480Y/277 V AC, 125 V DC (2 poles in series)
	Rated interrupting capacity	10 kA
	Application Suppl. prot., for general use.	TC2, OL0, SC:U1
	Reference temperature for tripping characteristics	40 °C
	Electrical endurance	6,000 ops., 1 cycle (1s.-ON, 9s.-OFF)

S300P
Mechanical data

		S300P
Mechanical Data	Housing	Insulation group I, RAL 7035
	Toggle	Insulation group II, black, sealable
	Contact position indication	Real CPI (green OFF / red ON)
	Trip position indicator	TPI (grey NO TRIP / orange TRIP)
	Protection degree acc. to DIN EN 60529	IP20, IP40 in enclosure with cover
	Mechanical endurance	20,000 ops.
	Shock resistance acc. to IEC/EN 60068-2-27	25 g - 2 shocks - 13 ms
	Vibration resistance acc. to IEC/EN 60068-2-6	5 g - 20 cycles at 5 ... 150 ... 5 Hz at 0.8 I_n
	Environmental conditions (damp heat cyclic) acc. to IEC/EN 60068-2-30	28 cycles with 55 °C/90-96 % and 25 °C/95-100 %
	Ambient temperature	-40 ... +70 °C
	Storage temperature	-50 ... +70 °C
Installation	Terminal	Failsafe bi-directional cylinder-lift terminal
	Cross-section of conductors (top/bottom)	solid, stranded: 35 mm² / 35 mm² flexible: 25 mm² / 25 mm² 14 – 4 AWG
	Cross-section of busbars (top/bottom)	10 mm² / 10 mm² 14 – 8 AWG
	Torque	2.8 Nm; 18 in-lbs.
	Screw driver	No. 2 Pozidrive
	Mounting	on DIN rail 35 mm, acc. to EN 60715 by dual DIN-rail release
	Mounting position	any
	Supply	any
Dimensions and weight	Mounting dimensions acc. to DIN 43880	1
	Pole dimensions (H x D x W)	88 x 69 x 17.5 mm
	Pole weight approx.	124 g
Combination with auxiliary elements	Auxiliary contact	Yes
	Bottom fixed auiliary contact	Yes
	Signal contact	Yes
	Shunt trip	Yes
	Undervoltage release	Yes
	Motor operating device	Yes
Standards	IEC/EN 60947-2	
	IEC/EN 60898-1	
	UL 1077	
	CSA 22.2. No.235	
	GB/T 14048.2	
	GB/T 10963.1	

Approvals

- VDE - DE
- UL 1077 - US
- CSA 22.2 No.235 - CA
- CCC - PRC
- EAC - RU
- KEMA - NL
- IMQ - IT
- SII - IL
- S+ - CH
- ÖVE - AT
- NF - FR
- EZU - CZ
- ANCE - MX
- KC - KR
- UKCA - UK
- DNV - NO
- GL - DE
- LRS - UK
- RINA - IT

Miniature Circuit breakers S300P

Tripping characteristics

MCB Type S300P - B (3 ... 5 x I_n AC)

Tripping Characteristic IEC/EN 60898-1

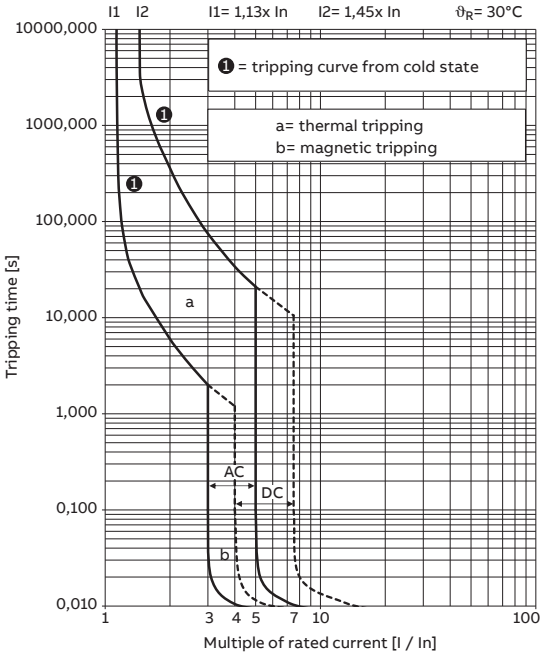

MCB Type S300P - C (5 ... 10 x I_n AC)

Tripping Characteristic IEC/EN 60898-1

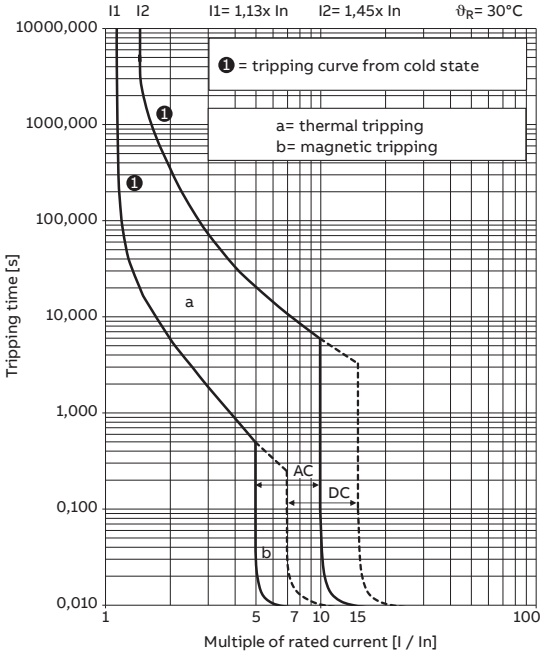

MCB Type S300P - D (10 ... 20 x I_n AC)

Tripping Characteristic IEC/EN 60898-1

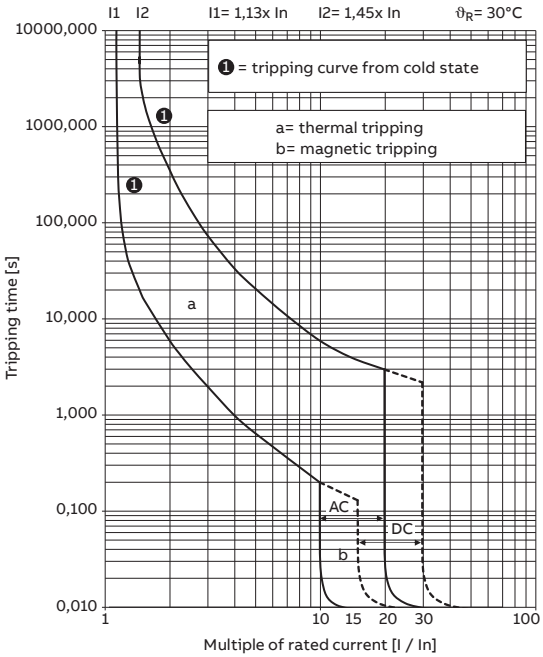

MCB Type S300P - K (10 ... 14 x I_n AC)
Tripping Characteristic IEC/EN 60947-2

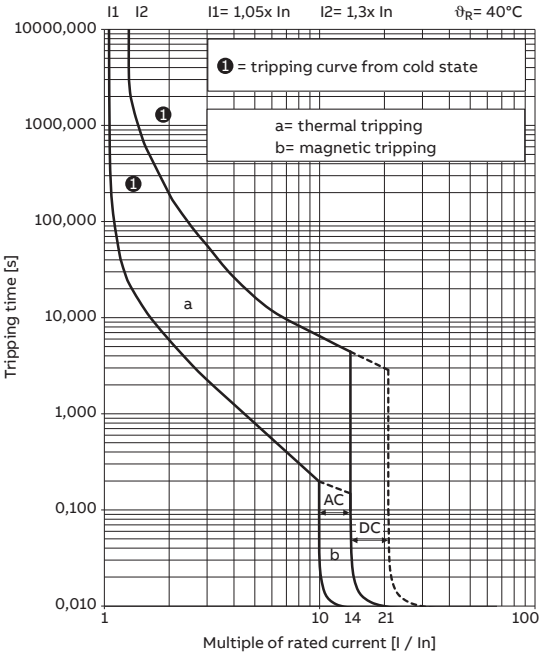

MCB Type S300P - Z (2 ... 3 x I_n AC)
Tripping Characteristic IEC/EN 60947-2

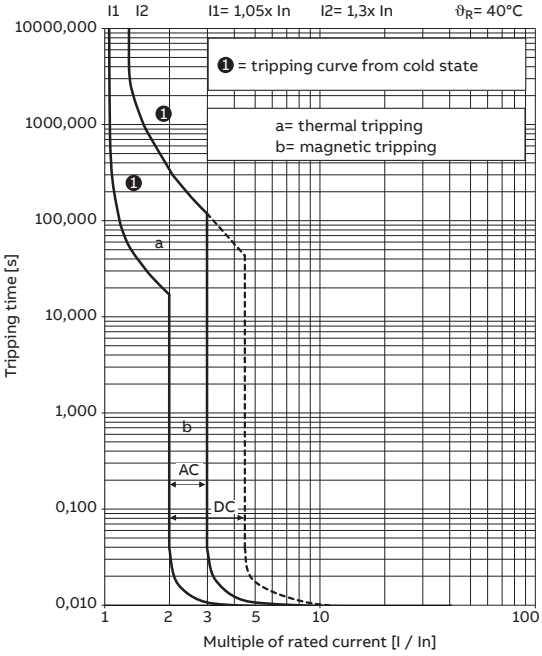

Tripping characteristics S300P

Acc. to	Tripping characteristics	Rated current	Thermal release [2]			Electromagnetic release [1]		
			Currents:		Tripping time	Currents:		Tripping time
			conventional non-tripping current	conventional tripping current		hold current surges	trip at least at	
IEC/EN 60898-1	B	06 to 63 A	1.13 · I_n		> 1 h	3 · I_n		> 0.1 s
				1.45 · I_n	< 1 h		5 · I_n	< 0.1 s
	C	0.5 to 63 A	1.13 · I_n		> 1 h	5 · I_n		> 0.1 s
				1.45 · I_n	< 1 h		10 · I_n	< 0.1 s
	D	0.5 to 63 A	1.13 · I_n		> 1 h	10 · I_n		> 0.1 s
				1.45 · I_n	< 1 h		20 · I_n	< 0.1 s
IEC/EN 60947-2	K	0.2 to 63 A	1.05 · I_n		> 1 h	10 · I_n		> 0.2 s
				1.3 · I_n	< 1 h [3]		14 · I_n	< 0.2 s
	Z	0.5 to 63 A	1.05 · I_n		> 1 h	2 · I_n		> 0.2 s
				1.3 · I_n	< 1 h [3]		3 · I_n	< 0.2 s

[1] The indicated electromagnetic tripping values apply to a frequency range of 16 2/3... 60 Hz. For different network frequencies or direct current the values change according to the multipler in the table below
[2] The thermal releases are calibrated to a nominal reference ambient temperature; for Z and K, the value is 40 °C, for B, C and D is 30 °C. In the case of higher ambient temperatures, the current values fall by ca. 6 % for each 10 K temperature rise.
[3] As from operating temperature (after I_1 > 1 h or, as applicable, 2 h).

	AC			DC
	100 Hz	200 Hz	400 Hz	
Multiplier	1.1	1.2	1.5	1.5

The thermal tripping performance is independent from the network frequency.

Miniature Circuit breakers S300P

Derating

For installations of miniature circuit breakers at other temperatures than the reference value and installations of several miniature circuit breakers directly side by side, derating factors have to be considered.

Deviating ambient temperature

The rated value of the current of a miniature circuit breaker refers to a temperature of 40 °C for circuit-breakers with characteristics K and Z and 30 °C for characteristics B, C and D. The following table contains the derating of load capability of S300P MCBs with temperature from -40 °C to 70 °C for the curves B, C, D, K, and Z.

Tripping characteristic	Rated Current I_n (A)	Max. Operating currents depending on the ambient temperature T (°C)											
		-40	-30	-20	-10	0	10	20	30	40	50	60	70
B. C and D	0.5	0.6	0.6	0.6	0.6	0.5	0.5	0.5	0.5	0.5	0.5	0.5	0.4
	1	1.2	1.2	1.2	1.1	1.1	1.1	1.0	1.0	1.0	0.9	0.9	0.9
	1.6	1.9	1.9	1.8	1.8	1.7	1.7	1.6	1.6	1.6	1.5	1.5	1.4
	2	2.4	2.4	2.3	2.2	2.2	2.1	2.1	2.0	1.9	1.9	1.8	1.8
	3	3.6	3.5	3.5	3.4	3.3	3.2	3.1	3.0	2.9	2.8	2.7	2.6
	4	4.8	4.7	4.6	4.5	4.4	4.2	4.1	4.0	3.9	3.8	3.6	3.5
	6	7.3	7.1	6.9	6.7	6.5	6.4	6.2	6.0	5.8	5.6	5.5	5.3
	8	9.7	9.4	9.2	9.0	8.7	8.5	8.2	8.0	7.8	7.5	7.3	7.0
	10	12.1	11.8	11.5	11.2	10.9	10.6	10.3	10.0	9.7	9.4	9.1	8.8
	13	15.5	15.5	15.0	14.5	14.0	14.0	13.5	13.0	12.5	12.0	12.0	11.5
	16	19.5	19.0	18.5	18.0	17.5	17.0	16.5	16.0	15.5	15.0	14.5	14.0
	20	24.0	23.5	23.0	22.5	22.0	21.0	20.5	20.0	19.5	19.0	18.0	17.5
	25	30.5	29.5	29.0	28.0	27.5	26.5	26.0	25.0	24.5	23.5	23.0	22.0
	32	38.5	38.0	37.0	36.0	35.0	34.0	33.0	32.0	31.0	30.0	29.0	28.0
	40	48.5	47.0	46.0	45.0	43.5	42.5	41.0	40.0	39.0	37.5	36.5	35.0
	50	60.5	59.0	57.5	56.0	54.5	53.0	51.5	50.0	48.5	47.0	45.5	44.0
	63	76.0	74.5	72.5	70.5	68.5	67.0	65.0	63.0	61.0	59.0	57.5	55.5
K and Z	0.2	0.3	0.3	0.2	0.2	0.2	0.2	0.2	0.2	0.2	0.2	0.2	0.2
	0.3	0.4	0.4	0.4	0.4	0.3	0.3	0.3	0.3	0.3	0.3	0.3	0.3
	0.5	0.7	0.6	0.6	0.6	0.6	0.6	0.5	0.5	0.5	0.5	0.5	0.4
	0.75	1.0	1.0	0.9	0.9	0.9	0.8	0.8	0.8	0.8	0.7	0.7	0.7
	1	1.3	1.3	1.2	1.2	1.2	1.1	1.1	1.0	1.0	1.0	0.9	0.9
	1.6	2.1	2.1	2.0	1.9	1.9	1.8	1.7	1.7	1.6	1.5	1.5	1.4
	2	2.7	2.6	2.5	2.4	2.3	2.2	2.2	2.1	2.0	1.9	1.9	1.8
	3	4.0	3.9	3.7	3.6	3.5	3.3	3.2	3.1	3.0	2.9	2.8	2.7
	4	5.3	5.2	5.0	4.8	4.6	4.5	4.3	4.1	4.0	3.9	3.7	3.6
	6	8.0	7.7	7.5	7.2	6.9	6.7	6.5	6.2	6.0	5.8	5.6	5.4
	8	10.7	10.3	9.9	9.6	9.3	8.9	8.6	8.3	8.0	7.7	7.4	7.1
	10	13.4	12.9	12.4	12.0	11.6	11.2	10.8	10.4	10.0	9.6	9.3	8.9
	13	17.5	17.0	16.0	15.5	15.0	14.5	14.0	13.5	13.0	12.5	12.0	11.5
	16	21.5	20.5	20.0	19.0	18.5	18.0	17.0	16.5	16.0	15.5	15.0	14.5
	20	26.5	26.0	25.0	24.0	23.0	22.5	21.5	20.5	20.0	19.5	18.5	18.0
	25	33.5	32.0	31.0	30.0	29.0	28.0	27.0	26.0	25.0	24.0	23.0	22.5
	32	43.0	41.5	40.0	38.5	37.0	35.5	34.5	33.0	32.0	31.0	29.5	28.5
	40	53.5	51.5	49.5	48.0	46.5	44.5	43.0	41.5	40.0	38.5	37.0	35.5
	50	67.0	64.5	62.0	60.0	58.0	56.0	54.0	52.0	50.0	48.0	46.5	44.5
	63	84.5	81.0	78.5	75.5	73.0	70.5	67.5	65.5	63.0	60.5	58.5	56.5

Influence of adjacent devices

If several miniature circuit breakers are installed directly side by side with high load on all poles, a correction factor must be applied to the rated current (see table). If distance pieces are used, the factor is not to be considered.

No. of adjacent devices	Factor F
1	1
2.3	0.9
4.5	0.8
≥ 6	0.75

Miniature Circuit breakers S300P

Accessories and dimensional drawings

Accessory overview

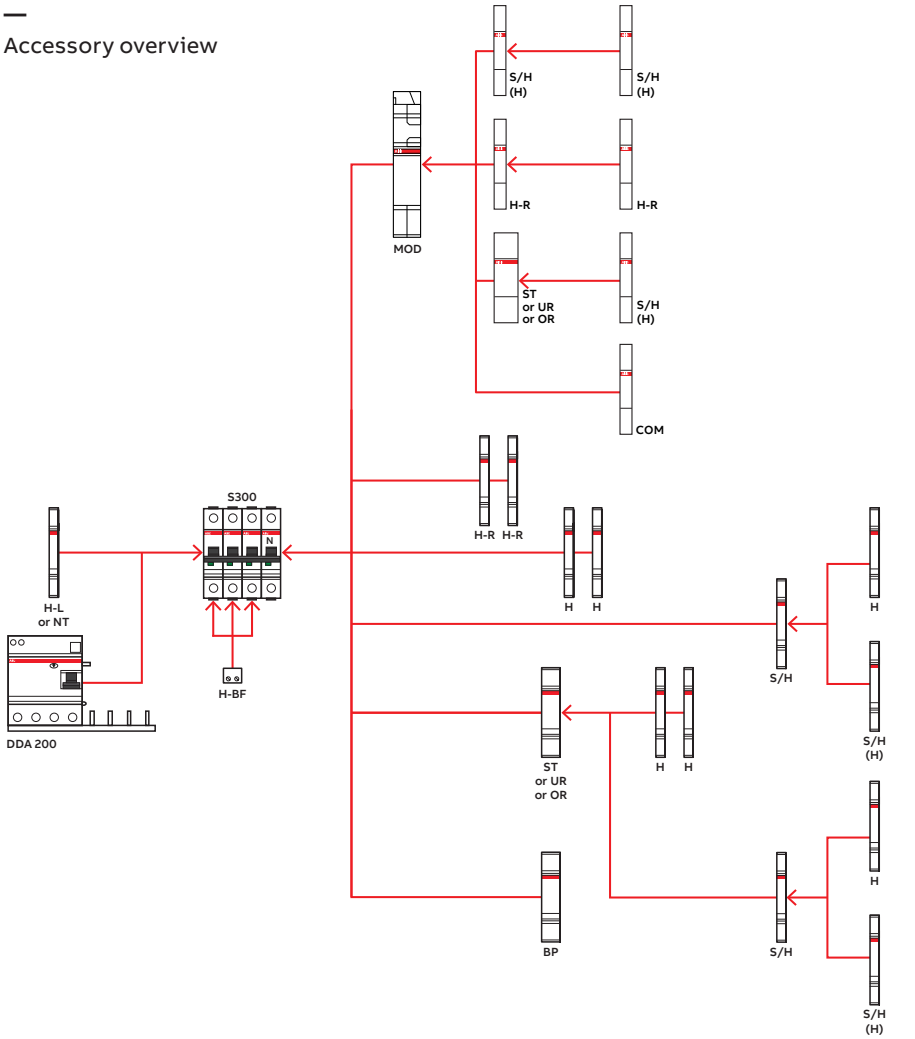

H	Auxiliary contact (change-over contact)	S2C-H6R	H-L	Auxiliary contact	S2C-H..L
H-R	Auxiliary contact	S2C-H6-..R	H-BF	Auxiliary contact for bottom fitting (1 per pole)	S2C-H01 S2C-H10
S/H	Signal/Auxiliary contact used as auxiliary contact	S2C-S/H6R	BP	Mechanical tripping device	S2C-BP
			NT	Neutral disconnector	S2C-NT..
ST	Shunt trip	S3C-A..	MOD (1)	Motor operating device	S3C-MOD
UR	Undervoltage release	S2C-UA	COM	ModBus Interface	eMOD/AR ModBus
OR	Overvoltage release	S2C-OVP			
DDA 200	RCD-block	DDA 20..			

(1) In case of using S300 with DDA 200, MOD does not operate in case of earth-voltage fault

Dimensional drawing

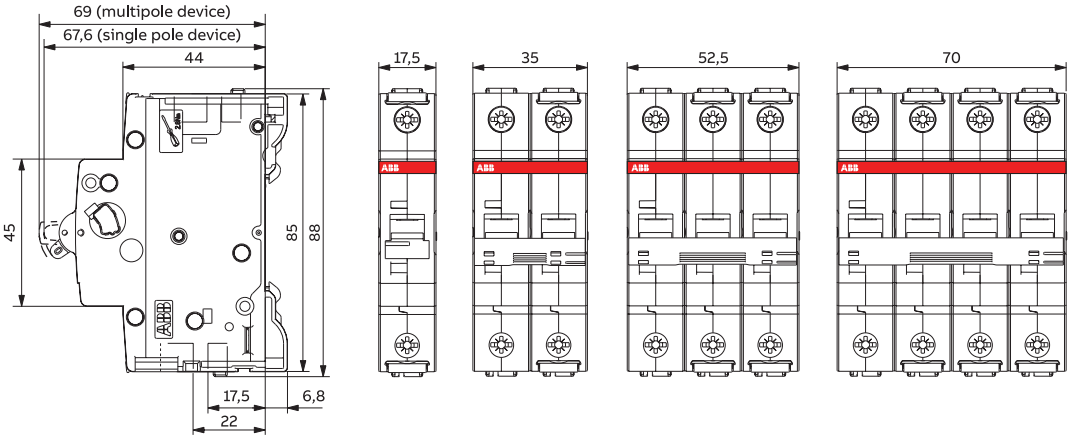

Miniature Circuit breakers S300P

B characteristic



S 301



S 302



S 303

Number of poles	Rated current [A]	Order details Bbn 401677 EAN	Type code	Ordercode	Weight 1 piece kg	Pack unit pc.
1	6	9080583	S301P-B6	2CDS381001R0065	0.124	10
	8	9086011	S301P-B8	2CDS381001R0085	0.124	10
	10	9080521	S301P-B10	2CDS381001R0105	0.124	10
	13	9080484	S301P-B13	2CDS381001R0135	0.124	10
	16	9080439	S301P-B16	2CDS381001R0165	0.124	10
	20	9080392	S301P-B20	2CDS381001R0205	0.124	10
	25	9080347	S301P-B25	2CDS381001R0255	0.124	10
	32	9080255	S301P-B32	2CDS381001R0325	0.124	10
	40	9080187	S301P-B40	2CDS381001R0405	0.124	10
	50	9080064	S301P-B50	2CDS381001R0505	0.124	10
	63	9079938	S301P-B63	2CDS381001R0635	0.124	10
2	6	9078993	S302P-B6	2CDS382001R0065	0.248	5
	8	9086059	S302P-B8	2CDS382001R0085	0.248	5
	10	9078931	S302P-B10	2CDS382001R0105	0.248	5
	13	9078894	S302P-B13	2CDS382001R0135	0.248	5
	16	9078849	S302P-B16	2CDS382001R0165	0.248	5
	20	9078801	S302P-B20	2CDS382001R0205	0.248	5
	25	9078757	S302P-B25	2CDS382001R0255	0.248	5
	32	9078665	S302P-B32	2CDS382001R0325	0.248	5
	40	9078597	S302P-B40	2CDS382001R0405	0.248	5
	50	9078474	S302P-B50	2CDS382001R0505	0.248	5
	63	9078344	S302P-B63	2CDS382001R0635	0.248	5
3	6	9078191	S303P-B6	2CDS383001R0065	0.372	1
	8	9086073	S303P-B8	2CDS383001R0085	0.372	1
	10	9078139	S303P-B10	2CDS383001R0105	0.372	1
	13	9078092	S303P-B13	2CDS383001R0135	0.372	1
	16	9078047	S303P-B16	2CDS383001R0165	0.372	1
	20	9078009	S303P-B20	2CDS383001R0205	0.372	1
	25	9077958	S303P-B25	2CDS383001R0255	0.372	1
	32	9077866	S303P-B32	2CDS383001R0325	0.372	1
	40	9077798	S303P-B40	2CDS383001R0405	0.372	1
	50	9077675	S303P-B50	2CDS383001R0505	0.372	1
	63	9077545	S303P-B63	2CDS383001R0635	0.372	1

Miniature Circuit breakers S300P

B characteristic



S 304



S 301 NA



S 303 NA

Number of poles	Rated current [A]	Order details Bbn 401677 EAN	Type code	Ordercode	Weight 1 piece kg	Pack unit pc.
4	6	9076593	S304P-B6	2CDS384001R0065	0.496	1
	8	9086110	S304P-B8	2CDS384001R0085	0.496	1
	10	9076531	S304P-B10	2CDS384001R0105	0.496	1
	13	9076494	S304P-B13	2CDS384001R0135	0.496	1
	16	9076449	S304P-B16	2CDS384001R0165	0.496	1
	20	9135559	S304P-B20	2CDS384001R0205	0.496	1
	25	9076357	S304P-B25	2CDS384001R0255	0.496	1
	32	9076265	S304P-B32	2CDS384001R0325	0.496	1
	40	9076197	S304P-B40	2CDS384001R0405	0.496	1
	50	9076074	S304P-B50	2CDS384001R0505	0.496	1
	63	9075947	S304P-B63	2CDS384001R0635	0.496	1
1+N	6	9079785	S301P-B6NA	2CDS381103R0065	0.248	5
	8	9086035	S301P-B8NA	2CDS381103R0085	0.248	5
	10	9079730	S301P-B10NA	2CDS381103R0105	0.248	5
	13	9079693	S301P-B13NA	2CDS381103R0135	0.248	5
	16	9079648	S301P-B16NA	2CDS381103R0165	0.248	5
	20	9079600	S301P-B20NA	2CDS381103R0205	0.248	5
	25	9079556	S301P-B25NA	2CDS381103R0255	0.248	5
	32	9079464	S301P-B32NA	2CDS381103R0325	0.248	5
	40	9079396	S301P-B40NA	2CDS381103R0405	0.248	5
	50	9079273	S301P-B50NA	2CDS381103R0505	0.248	5
	63	9079143	S301P-B63NA	2CDS381103R0635	0.248	5
3+N	6	9077392	S303P-B6NA	2CDS383103R0065	0.496	1
	8	9086097	S303P-B8NA	2CDS383103R0085	0.496	1
	10	9077330	S303P-B10NA	2CDS383103R0105	0.496	1
	13	9077293	S303P-B13NA	2CDS383103R0135	0.496	1
	16	9077248	S303P-B16NA	2CDS383103R0165	0.496	1
	20	9135641	S303P-B20NA	2CDS383103R0205	0.496	1
	25	9077156	S303P-B25NA	2CDS383103R0255	0.496	1
	32	9077064	S303P-B32NA	2CDS383103R0325	0.496	1
	40	9076999	S303P-B40NA	2CDS383103R0405	0.496	1
	50	9076876	S303P-B50NA	2CDS383103R0505	0.496	1
	63	9076746	S303P-B63NA	2CDS383103R0635	0.496	1

Miniature Circuit breakers S300P

C characteristic



S 301



S 302



S 303

Number of poles	Rated current [A]	Order details Bbn 401677 EAN	Type code	Ordercode	Weight 1 piece kg	Pack unit pc.
1	0.5	9079891	S301P-C0.5	2CDS381001R0984	0.124	10
	1	9080675	S301P-C1	2CDS381001R0014	0.124	10
	1.6	9079914	S301P-C1.6	2CDS381001R0974	0.124	10
	2	9080651	S301P-C2	2CDS381001R0024	0.124	10
	3	9080637	S301P-C3	2CDS381001R0034	0.124	10
	4	9080613	S301P-C4	2CDS381001R0044	0.124	10
	6	9080590	S301P-C6	2CDS381001R0064	0.124	10
	8	9080569	S301P-C8	2CDS381001R0084	0.124	10
	10	9080538	S301P-C10	2CDS381001R0104	0.124	10
	13	9080491	S301P-C13	2CDS381001R0134	0.124	10
	16	9080446	S301P-C16	2CDS381001R0164	0.124	10
	20	9080408	S301P-C20	2CDS381001R0204	0.124	10
	25	9080354	S301P-C25	2CDS381001R0254	0.124	10
	32	9080262	S301P-C32	2CDS381001R0324	0.124	10
	40	9080194	S301P-C40	2CDS381001R0404	0.124	10
	50	9080071	S301P-C50	2CDS381001R0504	0.124	10
	63	9079945	S301P-C63	2CDS381001R0634	0.124	10
2	0.5	9078306	S302P-C0.5	2CDS382001R0984	0.248	5
	1	9079082	S302P-C1	2CDS382001R0014	0.248	5
	1.6	9078320	S302P-C1.6	2CDS382001R0974	0.248	5
	2	9079068	S302P-C2	2CDS382001R0024	0.248	5
	3	9079044	S302P-C3	2CDS382001R0034	0.248	5
	4	9079020	S302P-C4	2CDS382001R0044	0.248	5
	6	9079006	S302P-C6	2CDS382001R0064	0.248	5
	8	9078979	S302P-C8	2CDS382001R0084	0.248	5
	10	9078948	S302P-C10	2CDS382001R0104	0.248	5
	13	9078900	S302P-C13	2CDS382001R0134	0.248	5
	16	9078856	S302P-C16	2CDS382001R0164	0.248	5
	20	9078818	S302P-C20	2CDS382001R0204	0.248	5
	25	9078764	S302P-C25	2CDS382001R0254	0.248	5
	32	9078672	S302P-C32	2CDS382001R0324	0.248	5
	40	9078603	S302P-C40	2CDS382001R0404	0.248	5
	50	9078481	S302P-C50	2CDS382001R0504	0.248	5
	63	9078351	S302P-C63	2CDS382001R0634	0.248	5
3	0.5	9077507	S303P-C0.5	2CDS383001R0984	0.372	1
	1	9078283	S303P-C1	2CDS383001R0014	0.372	1
	1.6	9077521	S303P-C1.6	2CDS383001R0974	0.372	1
	2	9078269	S303P-C2	2CDS383001R0024	0.372	1
	3	9078245	S303P-C3	2CDS383001R0034	0.372	1
	4	9078221	S303P-C4	2CDS383001R0044	0.372	1
	6	9078207	S303P-C6	2CDS383001R0064	0.372	1
	8	9078177	S303P-C8	2CDS383001R0084	0.372	1
	10	9078146	S303P-C10	2CDS383001R0104	0.372	1
	13	9078108	S303P-C13	2CDS383001R0134	0.372	1
	16	9078054	S303P-C16	2CDS383001R0164	0.372	1
	20	9078016	S303P-C20	2CDS383001R0204	0.372	1
	25	9077965	S303P-C25	2CDS383001R0254	0.372	1
	32	9077873	S303P-C32	2CDS383001R0324	0.372	1
	40	9077804	S303P-C40	2CDS383001R0404	0.372	1
	50	9077682	S303P-C50	2CDS383001R0504	0.372	1
	63	9077552	S303P-C63	2CDS383001R0634	0.372	1

Miniature Circuit breakers S300P

C characteristic



S 304



S 301 NA



S 303 NA

Number of poles	Rated current [A]	Order details Bbn 401677 EAN	Type code	Ordercode	Weight 1 piece kg	Pack unit pc.
4	0.5	9135511	S304P-C0.5	2CDS384001R0984	0.496	1
	1	9076685	S304P-C1	2CDS384001R0014	0.496	1
	1.6	9075923	S304P-C1.6	2CDS384001R0974	0.496	1
	2	9076661	S304P-C2	2CDS384001R0024	0.496	1
	3	9076647	S304P-C3	2CDS384001R0034	0.496	1
	4	9076623	S304P-C4	2CDS384001R0044	0.496	1
	6	9135573	S304P-C6	2CDS384001R0064	0.496	1
	8	9076579	S304P-C8	2CDS384001R0084	0.496	1
	10	9076548	S304P-C10	2CDS384001R0104	0.496	1
	13	9135566	S304P-C13	2CDS384001R0134	0.496	1
	16	9076456	S304P-C16	2CDS384001R0164	0.496	1
	20	9076418	S304P-C20	2CDS384001R0204	0.496	1
	25	9076364	S304P-C25	2CDS384001R0254	0.496	1
	32	9076272	S304P-C32	2CDS384001R0324	0.496	1
	40	9135689	S304P-C40	2CDS384001R0404	0.496	1
	50	9076081	S304P-C50	2CDS384001R0504	0.496	1
	63	9075954	S304P-C63	2CDS384001R0634	0.496	1
1+N	0.5	9079105	S301P-C0.5NA	2CDS381103R0984	0.248	5
	1	9079877	S301P-C1NA	2CDS381103R0014	0.248	5
	1.6	9079129	S301P-C1.6NA	2CDS381103R0974	0.248	5
	2	9079853	S301P-C2NA	2CDS381103R0024	0.248	5
	3	9079839	S301P-C3NA	2CDS381103R0034	0.248	5
	4	9079815	S301P-C4NA	2CDS381103R0044	0.248	5
	6	9079792	S301P-C6NA	2CDS381103R0064	0.248	5
	8	9079778	S301P-C8NA	2CDS381103R0084	0.248	5
	10	9079747	S301P-C10NA	2CDS381103R0104	0.248	5
	13	9079709	S301P-C13NA	2CDS381103R0134	0.248	5
	16	9079655	S301P-C16NA	2CDS381103R0164	0.248	5
	20	9079617	S301P-C20NA	2CDS381103R0204	0.248	5
	25	9079563	S301P-C25NA	2CDS381103R0254	0.248	5
	32	9079471	S301P-C32NA	2CDS381103R0324	0.248	5
	40	9079402	S301P-C40NA	2CDS381103R0404	0.248	5
	50	9079280	S301P-C50NA	2CDS381103R0504	0.248	5
	63	9079150	S301P-C63NA	2CDS381103R0634	0.248	5
3+N	0.5	9135580	S303P-C0.5NA	2CDS383103R0984	0.496	1
	1	9077484	S303P-C1NA	2CDS383103R0014	0.496	1
	1.6	9076722	S303P-C1.6NA	2CDS383103R0974	0.496	1
	2	9077460	S303P-C2NA	2CDS383103R0024	0.496	1
	3	9077446	S303P-C3NA	2CDS383103R0034	0.496	1
	4	9077422	S303P-C4NA	2CDS383103R0044	0.496	1
	6	9077408	S303P-C6NA	2CDS383103R0064	0.496	1
	8	9077378	S303P-C8NA	2CDS383103R0084	0.496	1
	10	9077347	S303P-C10NA	2CDS383103R0104	0.496	1
	13	9135658	S303P-C13NA	2CDS383103R0134	0.496	1
	16	9077255	S303P-C16NA	2CDS383103R0164	0.496	1
	20	9077217	S303P-C20NA	2CDS383103R0204	0.496	1
	25	9077163	S303P-C25NA	2CDS383103R0254	0.496	1
	32	9077071	S303P-C32NA	2CDS383103R0324	0.496	1
	40	9135627	S303P-C40NA	2CDS383103R0404	0.496	1
	50	9076883	S303P-C50NA	2CDS383103R0504	0.496	1
	63	9076753	S303P-C63NA	2CDS383103R0634	0.496	1

Miniature Circuit breakers S300P

D characteristic



S 301



S 302



S 303

Number of poles	Rated current [A]	Order details Bbn 401677 EAN	Type code	Ordercode	Weight 1 piece kg	Pack unit pc.
1	0.5	9079907	S301P-D0.5	2CDS381001R0981	0.124	10
	1	9080682	S301P-D1	2CDS381001R0011	0.124	10
	1.6	9079921	S301P-D1.6	2CDS381001R0971	0.124	10
	2	9080668	S301P-D2	2CDS381001R0021	0.124	10
	3	9080644	S301P-D3	2CDS381001R0031	0.124	10
	4	9080620	S301P-D4	2CDS381001R0041	0.124	10
	6	9080606	S301P-D6	2CDS381001R0061	0.124	10
	8	9080576	S301P-D8	2CDS381001R0081	0.124	10
	10	9080545	S301P-D10	2CDS381001R0101	0.124	10
	13	9080507	S301P-D13	2CDS381001R0131	0.124	10
	16	9080453	S301P-D16	2CDS381001R0161	0.124	10
	20	9080415	S301P-D20	2CDS381001R0201	0.124	10
	25	9080361	S301P-D25	2CDS381001R0251	0.124	10
	32	9080279	S301P-D32	2CDS381001R0321	0.124	10
	40	9080200	S301P-D40	2CDS381001R0401	0.124	10
	50	9080088	S301P-D50	2CDS381001R0501	0.124	10
	63	9079952	S301P-D63	2CDS381001R0631	0.124	10
2	0.5	9078313	S302P-D0.5	2CDS382001R0981	0.248	5
	1	9079099	S302P-D1	2CDS382001R0011	0.248	5
	1.6	9078337	S302P-D1.6	2CDS382001R0971	0.248	5
	2	9079075	S302P-D2	2CDS382001R0021	0.248	5
	3	9079051	S302P-D3	2CDS382001R0031	0.248	5
	4	9079037	S302P-D4	2CDS382001R0041	0.248	5
	6	9079013	S302P-D6	2CDS382001R0061	0.248	5
	8	9078986	S302P-D8	2CDS382001R0081	0.248	5
	10	9078955	S302P-D10	2CDS382001R0101	0.248	5
	13	9078917	S302P-D13	2CDS382001R0131	0.248	5
	16	9078863	S302P-D16	2CDS382001R0161	0.248	5
	20	9078825	S302P-D20	2CDS382001R0201	0.248	5
	25	9078771	S302P-D25	2CDS382001R0251	0.248	5
	32	9078689	S302P-D32	2CDS382001R0321	0.248	5
	40	9078610	S302P-D40	2CDS382001R0401	0.248	5
	50	9078498	S302P-D50	2CDS382001R0501	0.248	5
	63	9078368	S302P-D63	2CDS382001R0631	0.248	5
3	0.5	9077514	S303P-D0.5	2CDS383001R0981	0.372	1
	1	9078290	S303P-D1	2CDS383001R0011	0.372	1
	1.6	9077538	S303P-D1.6	2CDS383001R0971	0.372	1
	2	9078276	S303P-D2	2CDS383001R0021	0.372	1
	3	9078252	S303P-D3	2CDS383001R0031	0.372	1
	4	9078238	S303P-D4	2CDS383001R0041	0.372	1
	6	9078214	S303P-D6	2CDS383001R0061	0.372	1
	8	9078184	S303P-D8	2CDS383001R0081	0.372	1
	10	9078153	S303P-D10	2CDS383001R0101	0.372	1
	13	9078115	S303P-D13	2CDS383001R0131	0.372	1
	16	9078061	S303P-D16	2CDS383001R0161	0.372	1
	20	9078023	S303P-D20	2CDS383001R0201	0.372	1
	25	9077972	S303P-D25	2CDS383001R0251	0.372	1
	32	9077880	S303P-D32	2CDS383001R0321	0.372	1
	40	9077811	S303P-D40	2CDS383001R0401	0.372	1
	50	9077699	S303P-D50	2CDS383001R0501	0.372	1
	63	9077569	S303P-D63	2CDS383001R0631	0.372	1

Miniature Circuit breakers S300P

D characteristic



S 304



S 301 NA



S 303 NA

Number of poles	Rated current [A]	Order details Bbn 401677 EAN	Type code	Ordercode	Weight 1 piece kg	Pack unit pc.
4	0.5	9075916	S304P-D0.5	2CDS384001R0981	0.496	1
	1	9076692	S304P-D1	2CDS384001R0011	0.496	1
	1.6	9075930	S304P-D1.6	2CDS384001R0971	0.496	1
	2	9076678	S304P-D2	2CDS384001R0021	0.496	1
	3	9076654	S304P-D3	2CDS384001R0031	0.496	1
	4	9076630	S304P-D4	2CDS384001R0041	0.496	1
	6	9076616	S304P-D6	2CDS384001R0061	0.496	1
	8	9076586	S304P-D8	2CDS384001R0081	0.496	1
	10	9076555	S304P-D10	2CDS384001R0101	0.496	1
	13	9076517	S304P-D13	2CDS384001R0131	0.496	1
	16	9076463	S304P-D16	2CDS384001R0161	0.496	1
	20	9076425	S304P-D20	2CDS384001R0201	0.496	1
	25	9076371	S304P-D25	2CDS384001R0251	0.496	1
	32	9076289	S304P-D32	2CDS384001R0321	0.496	1
	40	9076210	S304P-D40	2CDS384001R0401	0.496	1
	50	9076098	S304P-D50	2CDS384001R0501	0.496	1
	63	9075961	S304P-D63	2CDS384001R0631	0.496	1
1+N	0.5	9079112	S301P-D0.5NA	2CDS381103R0981	0.248	5
	1	9079884	S301P-D1NA	2CDS381103R0011	0.248	5
	1.6	9079136	S301P-D1.6NA	2CDS381103R0971	0.248	5
	2	9079860	S301P-D2NA	2CDS381103R0021	0.248	5
	3	9079846	S301P-D3NA	2CDS381103R0031	0.248	5
	4	9079822	S301P-D4NA	2CDS381103R0041	0.248	5
	6	9079808	S301P-D6NA	2CDS381103R0061	0.248	5
	8	9085717	S301P-D8NA	2CDS381103R0081	0.248	5
	10	9079754	S301P-D10NA	2CDS381103R0101	0.248	5
	13	9079716	S301P-D13NA	2CDS381103R0131	0.248	5
	16	9079662	S301P-D16NA	2CDS381103R0161	0.248	5
	20	9079624	S301P-D20NA	2CDS381103R0201	0.248	5
	25	9079570	S301P-D25NA	2CDS381103R0251	0.248	5
	32	9079488	S301P-D32NA	2CDS381103R0321	0.248	5
	40	9079419	S301P-D40NA	2CDS381103R0401	0.248	5
	50	9079297	S301P-D50NA	2CDS381103R0501	0.248	5
	63	9079167	S301P-D63NA	2CDS381103R0631	0.248	5
3+N	0.5	9076715	S303P-D0.5NA	2CDS383103R0981	0.496	1
	1	9077491	S303P-D1NA	2CDS383103R0011	0.496	1
	1.6	9076739	S303P-D1.6NA	2CDS383103R0971	0.496	1
	2	9077477	S303P-D2NA	2CDS383103R0021	0.496	1
	3	9077453	S303P-D3NA	2CDS383103R0031	0.496	1
	4	9077439	S303P-D4NA	2CDS383103R0041	0.496	1
	6	9077415	S303P-D6NA	2CDS383103R0061	0.496	1
	8	9077385	S303P-D8NA	2CDS383103R0081	0.496	1
	10	9077354	S303P-D10NA	2CDS383103R0101	0.496	1
	13	9077316	S303P-D13NA	2CDS383103R0131	0.496	1
	16	9077262	S303P-D16NA	2CDS383103R0161	0.496	1
	20	9077224	S303P-D20NA	2CDS383103R0201	0.496	1
	25	9077170	S303P-D25NA	2CDS383103R0251	0.496	1
	32	9077088	S303P-D32NA	2CDS383103R0321	0.496	1
	40	9077019	S303P-D40NA	2CDS383103R0401	0.496	1
	50	9076890	S303P-D50NA	2CDS383103R0501	0.496	1
	63	9076760	S303P-D63NA	2CDS383103R0631	0.496	1

Miniature Circuit breakers S300P

K characteristic



S 301



S 302

Number of poles	Rated current [A]	Order details Bbn 401677 EAN	Type code	Ordercode	Weight 1 piece kg	Pack unit pc.
1	0.2	9080552	S301P-K0.2	2CDS381001R0087	0.124	10
	0.3	9080514	S301P-K0.3	2CDS381001R0117	0.124	10
	0.5	9080477	S301P-K0.5	2CDS381001R0157	0.124	10
	0.75	9080422	S301P-K0.75	2CDS381001R0187	0.124	10
	1	9080385	S301P-K1	2CDS381001R0217	0.124	10
	1.6	9080330	S301P-K1.6	2CDS381001R0257	0.124	10
	2	9080316	S301P-K2	2CDS381001R0277	0.124	10
	3	9080293	S301P-K3	2CDS381001R0317	0.124	10
	4	9080248	S301P-K4	2CDS381001R0337	0.124	10
	6	9080224	S301P-K6	2CDS381001R0377	0.124	10
	8	9080170	S301P-K8	2CDS381001R0407	0.124	10
	10	9080156	S301P-K10	2CDS381001R0427	0.124	10
	13	9080132	S301P-K13	2CDS381001R0447	0.124	10
	16	9080125	S301P-K16	2CDS381001R0467	0.124	10
	20	9080101	S301P-K20	2CDS381001R0487	0.124	10
	25	9080057	S301P-K25	2CDS381001R0517	0.124	10
	32	9080033	S301P-K32	2CDS381001R0537	0.124	10
	40	9080019	S301P-K40	2CDS381001R0557	0.124	10
	50	9079990	S301P-K50	2CDS381001R0577	0.124	10
	63	9079976	S301P-K63	2CDS381001R0607	0.124	10
2	0.2	9078962	S302P-K0.2	2CDS382001R0087	0.248	5
	0.3	9078924	S302P-K0.3	2CDS382001R0117	0.248	5
	0.5	9078887	S302P-K0.5	2CDS382001R0157	0.248	5
	0.75	9078832	S302P-K0.75	2CDS382001R0187	0.248	5
	1	9078795	S302P-K1	2CDS382001R0217	0.248	5
	1.6	9078740	S302P-K1.6	2CDS382001R0257	0.248	5
	2	9078726	S302P-K2	2CDS382001R0277	0.248	5
	3	9078702	S302P-K3	2CDS382001R0317	0.248	5
	4	9078658	S302P-K4	2CDS382001R0337	0.248	5
	6	9078634	S302P-K6	2CDS382001R0377	0.248	5
	8	9078580	S302P-K8	2CDS382001R0407	0.248	5
	10	9078566	S302P-K10	2CDS382001R0427	0.248	5
	13	9078542	S302P-K13	2CDS382001R0447	0.248	5
	16	9078535	S302P-K16	2CDS382001R0467	0.248	5
	20	9078511	S302P-K20	2CDS382001R0487	0.248	5
	25	9078467	S302P-K25	2CDS382001R0517	0.248	5
	32	9078443	S302P-K32	2CDS382001R0537	0.248	5
	40	9078429	S302P-K40	2CDS382001R0557	0.248	5
	50	9078405	S302P-K50	2CDS382001R0577	0.248	5
	63	9078382	S302P-K63	2CDS382001R0607	0.248	5

Miniature Circuit breakers S300P

K characteristic



S 303



S 304

Number of poles	Rated current [A]	Order details Bbn 401677 EAN	Type code	Ordercode	Weight 1 piece kg	Pack unit pc.
3	0.2	9078160	S303P-K0.2	2CDS383001R0087	0.372	1
	0.3	9078122	S303P-K0.3	2CDS383001R0117	0.372	1
	0.5	9078085	S303P-K0.5	2CDS383001R0157	0.372	1
	0.75	9078030	S303P-K0.75	2CDS383001R0187	0.372	1
	1	9077996	S303P-K1	2CDS383001R0217	0.372	1
	1.6	9077941	S303P-K1.6	2CDS383001R0257	0.372	1
	2	9077927	S303P-K2	2CDS383001R0277	0.372	1
	3	9077903	S303P-K3	2CDS383001R0317	0.372	1
	4	9077859	S303P-K4	2CDS383001R0337	0.372	1
	6	9077835	S303P-K6	2CDS383001R0377	0.372	1
	8	9077781	S303P-K8	2CDS383001R0407	0.372	1
	10	9077767	S303P-K10	2CDS383001R0427	0.372	1
	13	9077743	S303P-K13	2CDS383001R0447	0.372	1
	16	9077736	S303P-K16	2CDS383001R0467	0.372	1
	20	9077712	S303P-K20	2CDS383001R0487	0.372	1
	25	9077668	S303P-K25	2CDS383001R0517	0.372	1
	32	9077644	S303P-K32	2CDS383001R0537	0.372	1
	40	9077620	S303P-K40	2CDS383001R0557	0.372	1
	50	9077606	S303P-K50	2CDS383001R0577	0.372	1
	63	9077583	S303P-K63	2CDS383001R0607	0.372	1
4	0.2	9076562	S304P-K0.2	2CDS384001R0087	0.496	1
	0.3	9076524	S304P-K0.3	2CDS384001R0117	0.496	1
	0.5	9076487	S304P-K0.5	2CDS384001R0157	0.496	1
	0.75	9076432	S304P-K0.75	2CDS384001R0187	0.496	1
	1	9076395	S304P-K1	2CDS384001R0217	0.496	1
	1.6	9076340	S304P-K1.6	2CDS384001R0257	0.496	1
	2	9076326	S304P-K2	2CDS384001R0277	0.496	1
	3	9135542	S304P-K3	2CDS384001R0317	0.496	1
	4	9076258	S304P-K4	2CDS384001R0337	0.496	1
	6	9076234	S304P-K6	2CDS384001R0377	0.496	1
	8	9076180	S304P-K8	2CDS384001R0407	0.496	1
	10	9076166	S304P-K10	2CDS384001R0427	0.496	1
	13	9076142	S304P-K13	2CDS384001R0447	0.496	1
	16	9076135	S304P-K16	2CDS384001R0467	0.496	1
	20	9076111	S304P-K20	2CDS384001R0487	0.496	1
	25	9076067	S304P-K25	2CDS384001R0517	0.496	1
	32	9076043	S304P-K32	2CDS384001R0537	0.496	1
	40	9076029	S304P-K40	2CDS384001R0557	0.496	1
	50	9135528	S304P-K50	2CDS384001R0577	0.496	1
	63	9075985	S304P-K63	2CDS384001R0607	0.496	1

Miniature Circuit breakers S300P

K characteristic



S 301 NA



S 303 NA

Number of poles	Rated current [A]	Order details Bbn 401677 EAN	Type code	Ordercode	Weight 1 piece kg	Pack unit pc.
1+N	0.2	9079761	S301P-K0.2NA	2CDS381103R0087	0.248	5
	0.3	9079723	S301P-K0.3NA	2CDS381103R0117	0.248	5
	0.5	9079686	S301P-K0.5NA	2CDS381103R0157	0.248	5
	0.75	9079631	S301P-K0.75NA	2CDS381103R0187	0.248	5
	1	9079594	S301P-K1NA	2CDS381103R0217	0.248	5
	1.6	9079549	S301P-K1.6NA	2CDS381103R0257	0.248	5
	2	9079525	S301P-K2NA	2CDS381103R0277	0.248	5
	3	9079501	S301P-K3NA	2CDS381103R0317	0.248	5
	4	9079457	S301P-K4NA	2CDS381103R0337	0.248	5
	6	9079433	S301P-K6NA	2CDS381103R0377	0.248	5
	8	9079389	S301P-K8NA	2CDS381103R0407	0.248	5
	10	9079365	S301P-K10NA	2CDS381103R0427	0.248	5
	13	9079341	S301P-K13NA	2CDS381103R0447	0.248	5
	16	9079334	S301P-K16NA	2CDS381103R0467	0.248	5
	20	9079310	S301P-K20NA	2CDS381103R0487	0.248	5
	25	9079266	S301P-K25NA	2CDS381103R0517	0.248	5
	32	9079242	S301P-K32NA	2CDS381103R0537	0.248	5
	40	9079228	S301P-K40NA	2CDS381103R0557	0.248	5
	50	9135665	S301P-K50NA	2CDS381103R0577	0.248	5
	63	9079181	S301P-K63NA	2CDS381103R0607	0.248	5
3+N	0.2	9077361	S303P-K0.2NA	2CDS383103R0087	0.496	1
	0.3	9077323	S303P-K0.3NA	2CDS383103R0117	0.496	1
	0.5	9077286	S303P-K0.5NA	2CDS383103R0157	0.496	1
	0.75	9077231	S303P-K0.75NA	2CDS383103R0187	0.496	1
	1	9077194	S303P-K1NA	2CDS383103R0217	0.496	1
	1.6	9077149	S303P-K1.6NA	2CDS383103R0257	0.496	1
	2	9077125	S303P-K2NA	2CDS383103R0277	0.496	1
	3	9135634	S303P-K3NA	2CDS383103R0317	0.496	1
	4	9077057	S303P-K4NA	2CDS383103R0337	0.496	1
	6	9077033	S303P-K6NA	2CDS383103R0377	0.496	1
	8	9076982	S303P-K8NA	2CDS383103R0407	0.496	1
	10	9076968	S303P-K10NA	2CDS383103R0427	0.496	1
	13	9076944	S303P-K13NA	2CDS383103R0447	0.496	1
	16	9076937	S303P-K16NA	2CDS383103R0467	0.496	1
	20	9076913	S303P-K20NA	2CDS383103R0487	0.496	1
	25	9076869	S303P-K25NA	2CDS383103R0517	0.496	1
	32	9076845	S303P-K32NA	2CDS383103R0537	0.496	1
	40	9076821	S303P-K40NA	2CDS383103R0557	0.496	1
	50	9135597	S303P-K50NA	2CDS383103R0577	0.496	1
	63	9076784	S303P-K63NA	2CDS383103R0607	0.496	1

Miniature Circuit breakers S300P

Z characteristic



S 301



S 302



S 303

Number of poles	Rated current [A]	Order details Bbn 401677 EAN	Type code	Ordercode	Weight 1 piece kg	Pack unit pc.
1	0.5	9080460	S301P-Z0.5	2CDS381001R0158	0.124	10
	1	9080378	S301P-Z1	2CDS381001R0218	0.124	10
	1.6	9080323	S301P-Z1.6	2CDS381001R0258	0.124	10
	2	9080309	S301P-Z2	2CDS381001R0278	0.124	10
	3	9080286	S301P-Z3	2CDS381001R0318	0.124	10
	4	9080231	S301P-Z4	2CDS381001R0338	0.124	10
	6	9080217	S301P-Z6	2CDS381001R0378	0.124	10
	8	9080163	S301P-Z8	2CDS381001R0408	0.124	10
	10	9080149	S301P-Z10	2CDS381001R0428	0.124	10
	16	9080118	S301P-Z16	2CDS381001R0468	0.124	10
	20	9080095	S301P-Z20	2CDS381001R0488	0.124	10
	25	9080040	S301P-Z25	2CDS381001R0518	0.124	10
	32	9080026	S301P-Z32	2CDS381001R0538	0.124	10
	40	9080002	S301P-Z40	2CDS381001R0558	0.124	10
	50	9079983	S301P-Z50	2CDS381001R0578	0.124	10
	63	9079969	S301P-Z63	2CDS381001R0608	0.124	10
2	0.5	9078870	S302P-Z0.5	2CDS382001R0158	0.248	5
	1	9078788	S302P-Z1	2CDS382001R0218	0.248	5
	1.6	9078733	S302P-Z1.6	2CDS382001R0258	0.248	5
	2	9078719	S302P-Z2	2CDS382001R0278	0.248	5
	3	9078696	S302P-Z3	2CDS382001R0318	0.248	5
	4	9078641	S302P-Z4	2CDS382001R0338	0.248	5
	6	9078627	S302P-Z6	2CDS382001R0378	0.248	5
	8	9078573	S302P-Z8	2CDS382001R0408	0.248	5
	10	9078559	S302P-Z10	2CDS382001R0428	0.248	5
	16	9078528	S302P-Z16	2CDS382001R0468	0.248	5
	20	9078504	S302P-Z20	2CDS382001R0488	0.248	5
	25	9078450	S302P-Z25	2CDS382001R0518	0.248	5
	32	9078436	S302P-Z32	2CDS382001R0538	0.248	5
	40	9078412	S302P-Z40	2CDS382001R0558	0.248	5
	50	9078399	S302P-Z50	2CDS382001R0578	0.248	5
	63	9078375	S302P-Z63	2CDS382001R0608	0.248	5
3	0.5	9078078	S303P-Z0.5	2CDS383001R0158	0.372	1
	1	9077989	S303P-Z1	2CDS383001R0218	0.372	1
	1.6	9077934	S303P-Z1.6	2CDS383001R0258	0.372	1
	2	9077910	S303P-Z2	2CDS383001R0278	0.372	1
	3	9077897	S303P-Z3	2CDS383001R0318	0.372	1
	4	9077842	S303P-Z4	2CDS383001R0338	0.372	1
	6	9077828	S303P-Z6	2CDS383001R0378	0.372	1
	8	9077774	S303P-Z8	2CDS383001R0408	0.372	1
	10	9077750	S303P-Z10	2CDS383001R0428	0.372	1
	16	9077729	S303P-Z16	2CDS383001R0468	0.372	1
	20	9077705	S303P-Z20	2CDS383001R0488	0.372	1
	25	9077651	S303P-Z25	2CDS383001R0518	0.372	1
	32	9077637	S303P-Z32	2CDS383001R0538	0.372	1
	40	9077613	S303P-Z40	2CDS383001R0558	0.372	1
	50	9077590	S303P-Z50	2CDS383001R0578	0.372	1
	63	9077576	S303P-Z63	2CDS383001R0608	0.372	1

Miniature Circuit breakers S300P

Z characteristic



S 304



S 301 NA



S 303 NA

Number of poles	Rated current [A]	Order details Bbn 401677 EAN	Type code	Ordercode	Weight 1 piece kg	Pack unit pc.
4	0.5	9076470	S304P-Z0.5	2CDS384001R0158	0.496	1
	1	9076388	S304P-Z1	2CDS384001R0218	0.496	1
	1.6	9076333	S304P-Z1.6	2CDS384001R0258	0.496	1
	2	9076319	S304P-Z2	2CDS384001R0278	0.496	1
	3	9076296	S304P-Z3	2CDS384001R0318	0.496	1
	4	9076241	S304P-Z4	2CDS384001R0338	0.496	1
	6	9076227	S304P-Z6	2CDS384001R0378	0.496	1
	8	9076173	S304P-Z8	2CDS384001R0408	0.496	1
	10	9076159	S304P-Z10	2CDS384001R0428	0.496	1
	16	9076128	S304P-Z16	2CDS384001R0468	0.496	1
	20	9135535	S304P-Z20	2CDS384001R0488	0.496	1
	25	9076050	S304P-Z25	2CDS384001R0518	0.496	1
	32	9076036	S304P-Z32	2CDS384001R0538	0.496	1
	40	9076012	S304P-Z40	2CDS384001R0558	0.496	1
	50	9075992	S304P-Z50	2CDS384001R0578	0.496	1
	63	9075978	S304P-Z63	2CDS384001R0608	0.496	1
1+N	0.5	9079679	S301P-Z0.5NA	2CDS381103R0158	0.248	5
	1	9079587	S301P-Z1NA	2CDS381103R0218	0.248	5
	1.6	9079532	S301P-Z1.6NA	2CDS381103R0258	0.248	5
	2	9079518	S301P-Z2NA	2CDS381103R0278	0.248	5
	3	9079495	S301P-Z3NA	2CDS381103R0318	0.248	5
	4	9079440	S301P-Z4NA	2CDS381103R0338	0.248	5
	6	9079426	S301P-Z6NA	2CDS381103R0378	0.248	5
	8	9079372	S301P-Z8NA	2CDS381103R0408	0.248	5
	10	9079358	S301P-Z10NA	2CDS381103R0428	0.248	5
	16	9079327	S301P-Z16NA	2CDS381103R0468	0.248	5
	20	9135672	S301P-Z20NA	2CDS381103R0488	0.248	5
	25	9079259	S301P-Z25NA	2CDS381103R0518	0.248	5
	32	9079235	S301P-Z32NA	2CDS381103R0538	0.248	5
	40	9079211	S301P-Z40NA	2CDS381103R0558	0.248	5
	50	9079198	S301P-Z50NA	2CDS381103R0578	0.248	5
	63	9079174	S301P-Z63NA	2CDS381103R0608	0.248	5
3+N	0.5	9077279	S303P-Z0.5NA	2CDS383103R0158	0.496	1
	1	9077187	S303P-Z1NA	2CDS383103R0218	0.496	1
	1.6	9077132	S303P-Z1.6NA	2CDS383103R0258	0.496	1
	2	9077118	S303P-Z2NA	2CDS383103R0278	0.496	1
	3	9077095	S303P-Z3NA	2CDS383103R0318	0.496	1
	4	9077040	S303P-Z4NA	2CDS383103R0338	0.496	1
	6	9077026	S303P-Z6NA	2CDS383103R0378	0.496	1
	8	9076975	S303P-Z8NA	2CDS383103R0408	0.496	1
	10	9076951	S303P-Z10NA	2CDS383103R0428	0.496	1
	16	9076920	S303P-Z16NA	2CDS383103R0468	0.496	1
	20	9135610	S303P-Z20NA	2CDS383103R0488	0.496	1
	25	9076852	S303P-Z25NA	2CDS383103R0518	0.496	1
	32	9076838	S303P-Z32NA	2CDS383103R0538	0.496	1
	40	9076814	S303P-Z40NA	2CDS383103R0558	0.496	1
	50	9076791	S303P-Z50NA	2CDS383103R0578	0.496	1
	63	9076777	S303P-Z63NA	2CDS383103R0608	0.496	1

ABB S.p.A.
Electrification
Smart Building

www.abb.com/lowvoltage

We reserve the right to make technical changes or modify the contents of this document without prior notice. With regard to purchase orders, the agreed particulars shall prevail. ABB AG does not accept any responsibility whatsoever for potential errors or possible lack of information in this document.

We reserve all rights in this document and in the subject matter and illustrations contained therein. Any reproduction, disclosure to third parties or utilization of its contents – in whole or in parts – is forbidden without prior written consent of ABB AG.
Copyright© 2024 ABB
All rights reserved

9AKK107992A4964 Rev. F - 04.2024