JUMO GmbH & Co. KG
Delivery address: Mackenrodtstraße 14
36039 Fulda, Germany
Postal address: 36035 Fulda, Germany
Phone: +49 661 6003-0
Fax: +49 661 6003-607
Email: mail@jumo.net
Internet: www.jumo.net

JUMO Instrument Co. Ltd.
JUMO House
Temple Bank, Riverway
Harlow, Essex CM 20 2DY, UK
Phone: +44 1279 63 55 33
Fax: +44 1279 62 50 29
Email: sales@jumo.co.uk
Internet: www.jumo.co.uk

JUMO Process Control, Inc.
6733 Myers Road
East Syracuse, NY 13057, USA
Phone: +1 315 437 5866
Fax: +1 315 437 5860
Email: info.us@jumo.net
Internet: www.jumousa.com

Surface RTD Temperature Probes



- For temperatures between -50 and +260 °C
- With protection fittings made from various materials
- For round and flat surfaces
- Simple and quick installation
- Low thermal mass
- Good thermal transfer from the measuring point to the sensor

Surface RTD temperature probes are the preferred choice for measuring temperatures on closed pipe systems and/or other round or flat surfaces. The probes can be installed with ease using tightening bands or cable ties so there is no need for mechanical modification of the measuring location. The basic types 902550/10 and 902550/11 which are provided with a hole for screw-fitting to any surface (such as heating plates) are the exception.

The indirect method of temperature measurement avoids disruption of the medium flow. Additionally, the operating life of the RTD temperature probe is not shortened by the effects of either pressure or chemicals.

The low thermal mass of the probe means that it has very little influence on the measured object. Heat-conducting paste is available to improve heat transfer. Large differences in temperature between the measurement medium and the surrounding environment will influence the measurement. In such cases, we recommend additional insulation.

The measuring insert is fitted as standard with a Pt100 temperature sensor according to DIN EN 60751, class B in a two-wire circuit; versions with Pt500 or Pt1000 are also available.

The product range is rounded off by a pipe contact probe with a large cable socket (basic type 902554/44). This is available with an analog transmitter as an optional extra.

Technical data

Connection	Available as tin-plated cable ends, with ferrules, with plug-in sleeves, or multi-pole plug connectors
Connecting cable	Silicone, ambient temperature -50 to +180 °C PTFE, ambient temperature -190 to +260 °C Kapton, ambient temperature -50 to +260 °C
Cable socket	Basic type 902554/41 and 902554/42 plastic housing: PC, color: silver-gray/blue Basic type 902554/44 plastic housing: PC, color: white Connection via screw terminals, basic type 902554/44 if transmitter not selected available with spring-cage terminals as optional extra
Protection tube	Stainless steel 1.4571, aluminum, plastic
Measuring insert	Pt100 temperature sensor, DIN EN 60751, class B, two-wire circuit
Transmitter	For basic type 902554/44 analog transmitter as optional extra, 4 to 20 mA or 0 to 10 V

Approvals / approval marks

Safety Integrity Level SIL QUALIFIED

Performance Level PL QUALIFIED

JUMO GmbH & Co. KG
Delivery address: Mackenrodtstraße 14
36039 Fulda, Germany
Postal address: 36035 Fulda, Germany
Phone: +49 661 6003-0
Fax: +49 661 6003-607
Email: mail@jumo.net
Internet: www.jumo.net

JUMO Instrument Co. Ltd.
JUMO House
Temple Bank, Riverway
Harlow, Essex CM 20 2DY, UK
Phone: +44 1279 63 55 33
Fax: +44 1279 62 50 29
Email: sales@jumo.co.uk
Internet: www.jumo.co.uk

JUMO Process Control, Inc.
6733 Myers Road
East Syracuse, NY 13057, USA
Phone: +1 315 437 5866
Fax: +1 315 437 5860
Email: info.us@jumo.net
Internet: www.jumousa.com

Transmitter

	Output 4 to 20 mA	Output 0 to 10 V
Input		
Measurement input	Pt100 (DIN EN 60751)	Pt100 (DIN EN 60751)
Sensor current	≤ 0.5 mA	≤ 0.5 mA
Sampling rate	Permanent measurement due to analog signal path	Permanent measurement due to analog signal path
Measuring circuit monitoring		
Underrange	Dropping to ≤ 3.6 mA	0 V
Overrange	Increasing to ≥ 22 to < 28 mA (typical 24 mA)	Increasing to ≥ 11 to < 14 V (typical 12 V)
Probe short circuit	≤ 3.6 mA	0 V
Probe/cable break	≥ 22 to < 28 mA (typical 24 mA)	≥ 11 to < 14 V (typical 12 V)
Output		
Output signal	Load-independent direct current: 4 to 20 mA	Direct voltage: 0 to 10 V
Transmission behavior	Temperature-linear	Temperature-linear
Transmission accuracy	≤ ±0.1 %	≤ ±0.2 %
Attenuation of the residual ripple of a voltage supply of 24 V, amplitude 10 V/50 Hz, burden 470 Ω/load 10 MΩ	37 dB	40 dB
Burden (Rb)	Rb = (Ub - 7.5 V) ÷ 22 mA	-
Burden influence	≤ ±0.02 %/100 Ω[a]	-
Load / load influence	-	≥ 10 kΩ/≤ ±0.1 %
Setting time for temperature changes	≤ 10 ms	≤ 10 ms
Calibration conditions	DC 24 V/approx. 22 °C	DC 24 V/approx. 22 °C
Calibration accuracy	≤ ±0.2 %[a,b] or ≤ ±0.2 K	≤ ±0.2 %[a,b] or ≤ ±0.2 K
Overall accuracy, sensor/calibration	±0.4 K (typical) at 20 °C/24 V voltage supply	±0.4 K (typical) at 20 °C/24 V voltage supply
Voltage supply		
Voltage supply (Ub)	DC 7.5 to 30 V	DC 15 to 30 V
Reverse voltage protection	Yes	Yes
Voltage supply influence	≤ ±0.01 %/V deviation from 24 V[a]	≤ ±0.01 %/V deviation from 24 V[a]
Environmental influences		
Operating temperature range	-40 to + 85 °C	-40 to + 85 °C
Storage temperature range	-40 to +100 °C	-40 to +100 °C
Temperature influence	≤ ±0.01 %/K deviation from 22 °C[a]	≤ ±0.01 %/K deviation from 22 °C[a]
Resistance to climatic conditions similar to DIN EN 60654 class C1	Relative humidity ≤ 95 % annual average, no condensation	Relative humidity ≤ 95 % annual average, no condensation
EMC interference emission/immunity	EN 61326 class B, industrial requirements	EN 61326 class B, industrial requirements

[a] All specifications refer to the measuring range end value of 20 mA.
[b] The higher value is valid.

Approvals / approval marks

Approval mark	Test facility	Certificate / certification number	Inspection basis	Valid for
SIL QUALIFIED PL QUALIFIED	-	-	-	Extra code 058 in conjunction with declaration of manufacturer

JUMO GmbH & Co. KG
Delivery address: Mackenrodtstraße 14
36039 Fulda, Germany
Postal address: 36035 Fulda, Germany
Phone: +49 661 6003-0
Fax: +49 661 6003-607
Email: mail@jumo.net
Internet: www.jumo.net

JUMO Instrument Co. Ltd.
JUMO House
Temple Bank, Riverway
Harlow, Essex CM 20 2DY, UK
Phone: +44 1279 63 55 33
Fax: +44 1279 62 50 29
Email: sales@jumo.co.uk
Internet: www.jumo.co.uk

JUMO Process Control, Inc.
6733 Myers Road
East Syracuse, NY 13057, USA
Phone: +1 315 437 5866
Fax: +1 315 437 5860
Email: info.us@jumo.net
Internet: www.jumousa.com

Connection diagram

Standard versions

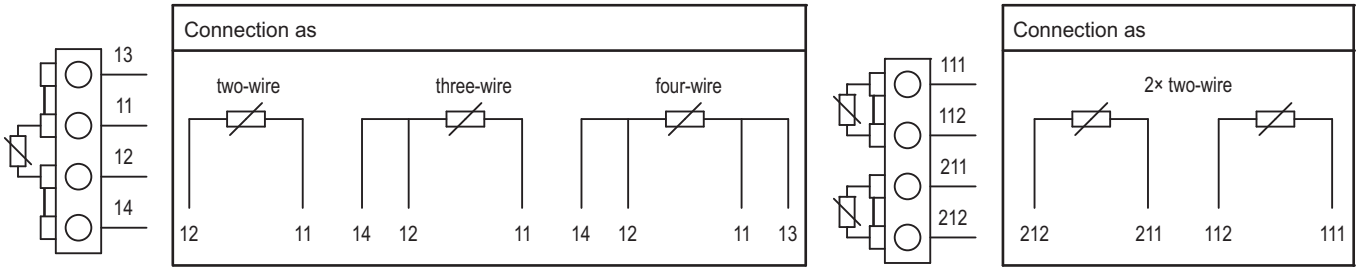

Transmitter for basic type 902554/44

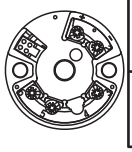

Output 4 to 20 mA

Connection for		Terminal assignment		
→	Voltage supply DC 7.5 to 30 V	+ 1 - 2	$R_B = \frac{U_b - 7.5\ V}{22\ mA}$ R_B = Burden resistance U_b = Voltage supply	1 2 + -
→	Current output 4 to 20 mA			

Output 0 to 10 V

Connection for		Terminal assignment		
→	Voltage supply DC 15 to 30 V	+ 1 - 2	Load ≥ 10 kΩ	1 2 3 + - +
→	Voltage output 0 to 10 V	- 2 + 3		

Connection examples

Connection example with power supply, output 4 to 20 mA

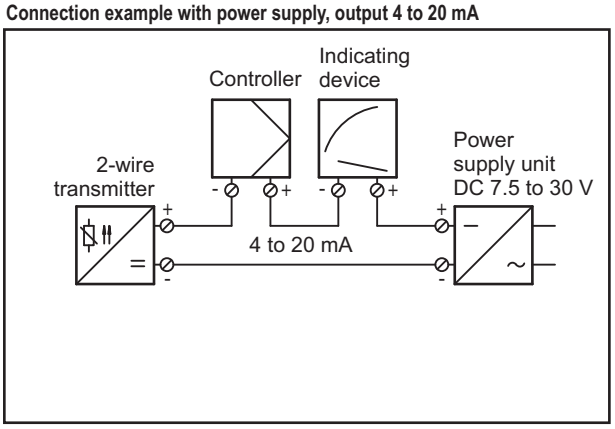

Connection example with power supply, output 0 to 10 V

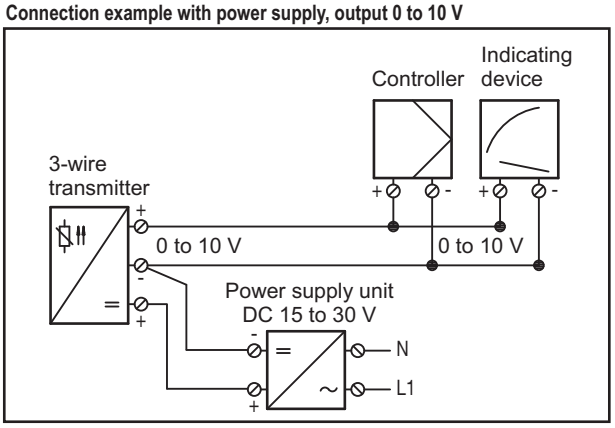

JUMO GmbH & Co. KG
Delivery address: Mackenrodtstraße 14
36039 Fulda, Germany
Postal address: 36035 Fulda, Germany
Phone: +49 661 6003-0
Fax: +49 661 6003-607
Email: mail@jumo.net
Internet: www.jumo.net

JUMO Instrument Co. Ltd.
JUMO House
Temple Bank, Riverway
Harlow, Essex CM 20 2DY, UK
Phone: +44 1279 63 55 33
Fax: +44 1279 62 50 29
Email: sales@jumo.co.uk
Internet: www.jumo.co.uk

JUMO Process Control, Inc.
6733 Myers Road
East Syracuse, NY 13057, USA
Phone: +1 315 437 5866
Fax: +1 315 437 5860
Email: info.us@jumo.net
Internet: www.jumousa.com

Dimensions

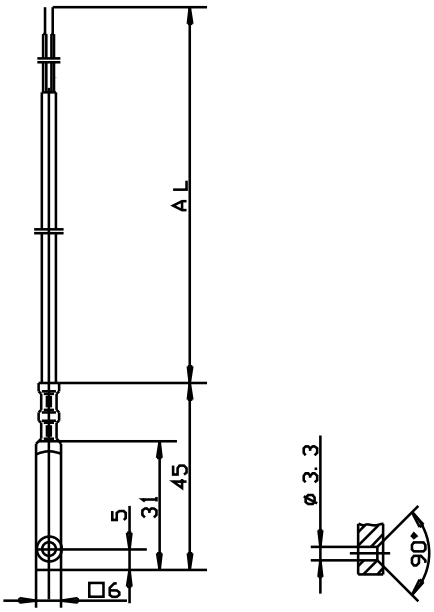

Basic type 902550/10

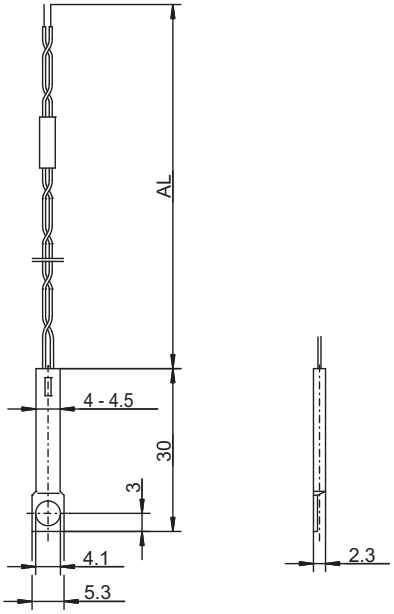

Basic type 902550/11

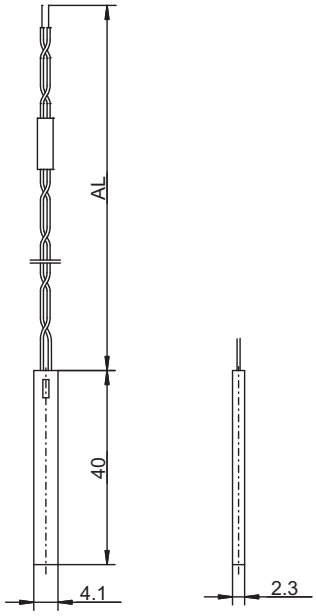

Basic type 902550/20

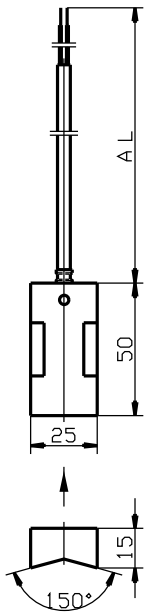

Basic type 902550/30

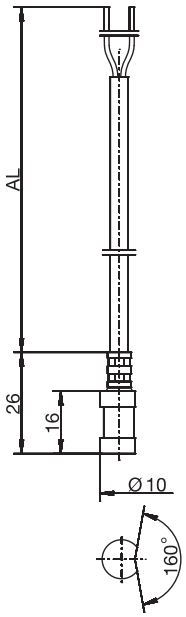

Basic type 902550/31

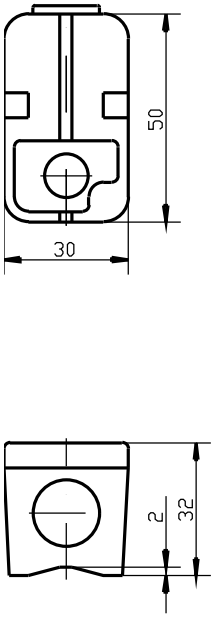

Basic type 902554/41
Basic type 902554/42

JUMO GmbH & Co. KG
Delivery address: Mackenrodtstraße 14
36039 Fulda, Germany
Postal address: 36035 Fulda, Germany
Phone: +49 661 6003-0
Fax: +49 661 6003-607
Email: mail@jumo.net
Internet: www.jumo.net

JUMO Instrument Co. Ltd.
JUMO House
Temple Bank, Riverway
Harlow, Essex CM 20 2DY, UK
Phone: +44 1279 63 55 33
Fax: +44 1279 62 50 29
Email: sales@jumo.co.uk
Internet: www.jumo.co.uk

JUMO Process Control, Inc.
6733 Myers Road
East Syracuse, NY 13057, USA
Phone: +1 315 437 5866
Fax: +1 315 437 5860
Email: info.us@jumo.net
Internet: www.jumousa.com

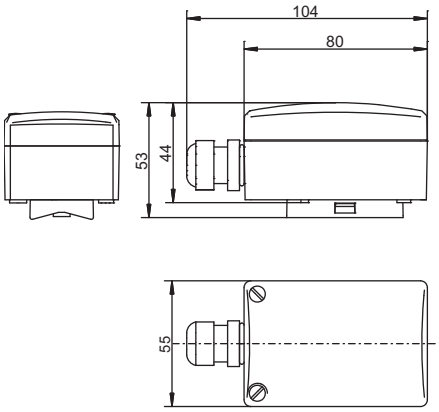

Basic type 902554/44

JUMO GmbH & Co. KG
Delivery address: Mackenrodtstraße 14
36039 Fulda, Germany
Postal address: 36035 Fulda, Germany
Phone: +49 661 6003-0
Fax: +49 661 6003-607
Email: mail@jumo.net
Internet: www.jumo.net

JUMO Instrument Co. Ltd.
JUMO House
Temple Bank, Riverway
Harlow, Essex CM 20 2DY, UK
Phone: +44 1279 63 55 33
Fax: +44 1279 62 50 29
Email: sales@jumo.co.uk
Internet: www.jumo.co.uk

JUMO Process Control, Inc.
6733 Myers Road
East Syracuse, NY 13057, USA
Phone: +1 315 437 5866
Fax: +1 315 437 5860
Email: info.us@jumo.net
Internet: www.jumousa.com

Order details

| | | |

JUMO GmbH & Co. KG
Delivery address: Mackenrodtstraße 14
36039 Fulda, Germany
Postal address: 36035 Fulda, Germany
Phone: +49 661 6003-0
Fax: +49 661 6003-607
Email: mail@jumo.net
Internet: www.jumo.net

JUMO Instrument Co. Ltd.
JUMO House
Temple Bank, Riverway
Harlow, Essex CM 20 2DY, UK
Phone: +44 1279 63 55 33
Fax: +44 1279 62 50 29
Email: sales@jumo.co.uk
Internet: www.jumo.co.uk

JUMO Process Control, Inc.
6733 Myers Road
East Syracuse, NY 13057, USA
Phone: +1 315 437 5866
Fax: +1 315 437 5860
Email: info.us@jumo.net
Internet: www.jumousa.com

				(1)	Basic type
			902554/41		Surface RTD temperature probe for cylindrical surfaces (pipes) protection type IP54, incl. installation kit
			902554/42		Surface RTD temperature probe for flat surfaces, protection type IP54
			902554/44		Surface RTD temperature probe for cylindrical surfaces (pipes), protection type IP65, incl. installation kit
				(2)	**Operating temperature in °C**
		x	361		-50 to +90 °C
x	x		365		-50 to +120 °C
		x	474		-40 to +80 °C (measuring range only in conjunction with extra code 330 or 333)
		x	573		-30 to +90 °C
				(3)	**Measuring insert**
x	x	x	1003		1× Pt100 in two-wire circuit
x	x	x	1004		1× Pt500 in two-wire circuit
x	x	x	1005		1× Pt1000 in two-wire circuit
x	x	x	1009		1× Ni1000 in two-wire circuit
		x	1619		1× KTY81-110 in two-wire circuit
x	x	x	1622		1× KTY81-122 in two-wire circuit
		x	1654		1× LM235 Z
		x	1728		1× NTC 1 kOhm
				(4)	**Tolerance class according to DIN EN 60751**
x	x	x	0		Technical data Ni/NTC/KTY/LM235 Z
x		x	1		Class B (standard)
x		x	2		Class A
		x	3		Class AA
				(5)	**Extra codes**
x	x	x	000		none
x	x	x	058		SIL and PL-compatible
		x	242		Conductor connection via spring-cage terminals (not in conjunction with transmitter)
		x	330		1× analog transmitter, output 4 to 20 mA[a] (in conjunction with Pt100), data sheet 707030
		x	333		1× analog transmitter, output 0 to 10 V[a] (in conjunction with Pt100), data sheet 707030
x	x		404		Protection type IP65 (cable fitting M16 × 1.5)

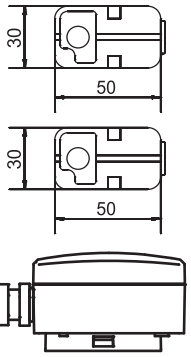

[a] Specify measuring range (deviating measuring range) in plain text.

	(1)		(2)		(3)		(4)		(5)	
Order code		-		-		-		/		,...[a]
Order example	902554/41	-	365	-	1003	-	1	/	000	

[a] List extra codes in sequence, separated by commas.

JUMO GmbH & Co. KG
Delivery address: Mackenrodtstraße 14
36039 Fulda, Germany
Postal address: 36035 Fulda, Germany
Phone: +49 661 6003-0
Fax: +49 661 6003-607
Email: mail@jumo.net
Internet: www.jumo.net

JUMO Instrument Co. Ltd.
JUMO House
Temple Bank, Riverway
Harlow, Essex CM 20 2DY, UK
Phone: +44 1279 63 55 33
Fax: +44 1279 62 50 29
Email: sales@jumo.co.uk
Internet: www.jumo.co.uk

JUMO Process Control, Inc.
6733 Myers Road
East Syracuse, NY 13057, USA
Phone: +1 315 437 5866
Fax: +1 315 437 5860
Email: info.us@jumo.net
Internet: www.jumousa.com

Stock versions

Order code	Part no.
902550/10-386-1003-1-11-2500/000	00306774
902550/11-386-1003-1-11-2500/000	00065548
902550/20-386-1003-1-11-2500/000	00065547
902550/30-378-1003-1-11-2500/315	00065531
902550/31-730-1003-1-11-2500/000	00506998
902550/31-378-1003-1-11-2500/000	00507000
902550/31-378-1005-1-11-2500/000	00507006
902554/41-365-1003-1/000	00378669
902554/41-365-1003-1/404	00376703