3/2-directional valve, electrically operated, Series AS2-SOV

R412006381

General series information
Series AS2

- The AVENTICS Series AS2 is a modular, versatile maintenance unit for universal application. This Series offers compact dimensions, is highly efficient, lightweight and easy-to-use. The AVENTICS Series AS guarantees reliability, safety, and efficiency with a simplified assembly and maintenance efforts.



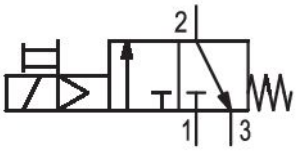

Technical data

Industry	Industrial
Activation	Electrically
Nominal flow Qn	2000 l/min
Compressed air connection	G 3/8
Working pressure min.	2.5 bar
Working pressure max	10 bar
DC operating voltage	24 V
Sealing principle	soft seal
Connection type	Pipe connection
Parts	3/2-directional valve
Can be assembled into blocks	Can be assembled into blocks
basic valve with electrical connector	Basic valve with pilot valve
Type	Poppet valve

Min. ambient temperature	-10 °C
Max. ambient temperature	50 °C
Medium	Compressed air Neutral gases
Max. particle size	25 µm
Compressed air connection, exhaust	G 1/4
Nominal flow Qn 1 to 2	2000 l/min
Nominal flow Qn 2 to 3	380 l/min
Operating voltage	24 V DC
Power consumption DC	2 W
Protection class with connection	IP65
Electrical connection type 2	Plug
Electrical connection 2, thread size	M12x1
Weight	0.219 kg

Material

Housing material	Polyamide
Seal material	Acrylonitrile butadiene rubber
Material threaded bushing	Die cast zinc
Material front plate	Acrylonitrile butadiene styrene
Part No.	R412006381

Technical information

The pressure dew point must be at least 15 °C less than ambient and medium temperature and may not exceed 3 °C.

Nominal flow Qn with secondary pressure p2 = 6 bar at Δp = 1 bar

A change in the flow direction (from air supply on the left to air supply on the right) occurs by rotating installation by 180° about the vertical axis. Please see the operating instructions for further details.

A short silencer is required for wall mounting (see accessories e.g. R412004817).

Dimensions in mm

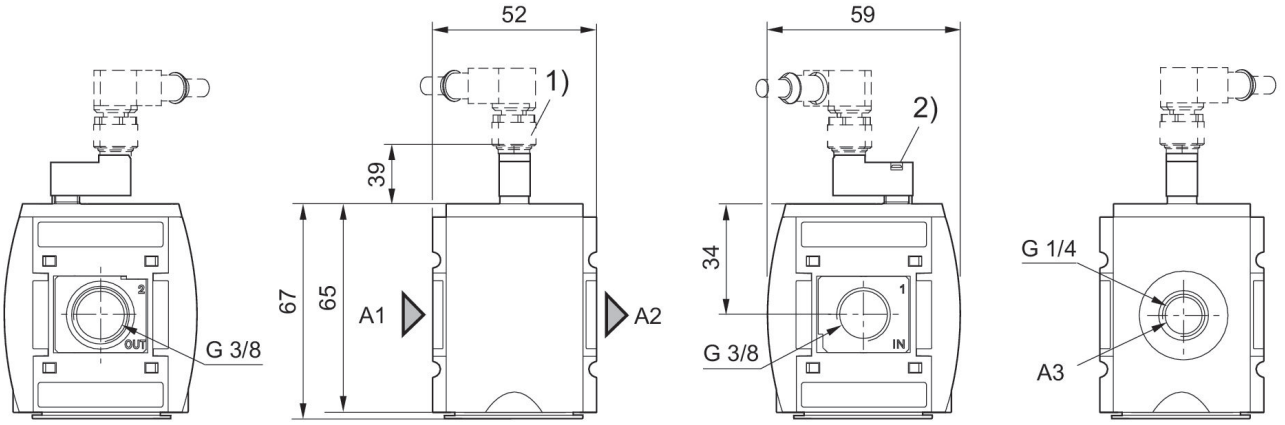

A1 = input
A2 = output
A3 = ventilation port
1) plug M12
2) Manual override

Flow rate characteristic

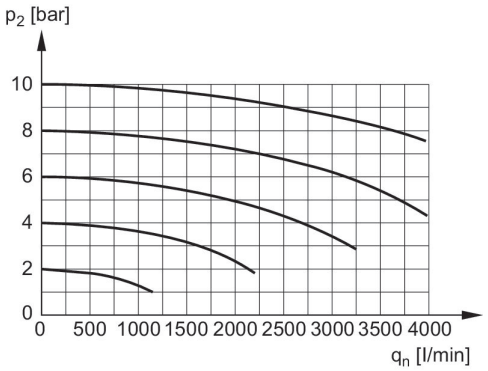

p2 = Secondary pressure
qn = Nominal flow

Rear exhaust

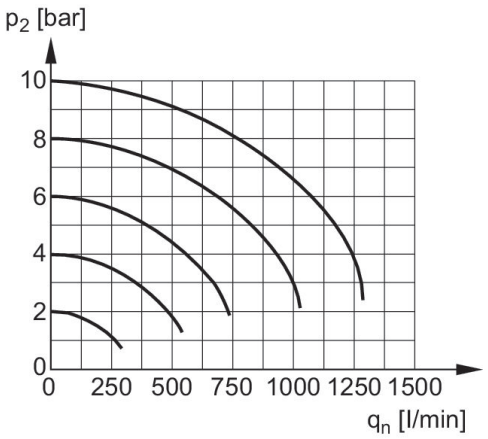

p2 = Secondary pressure
qn = Nominal flow

Pin assignment M12x1

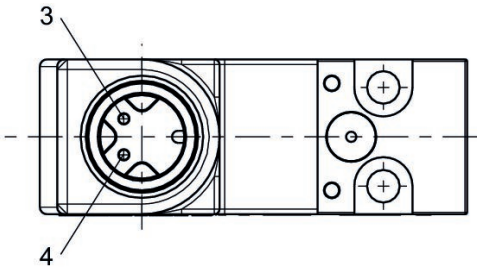

3: +/-
4: +/-

Accessories overview

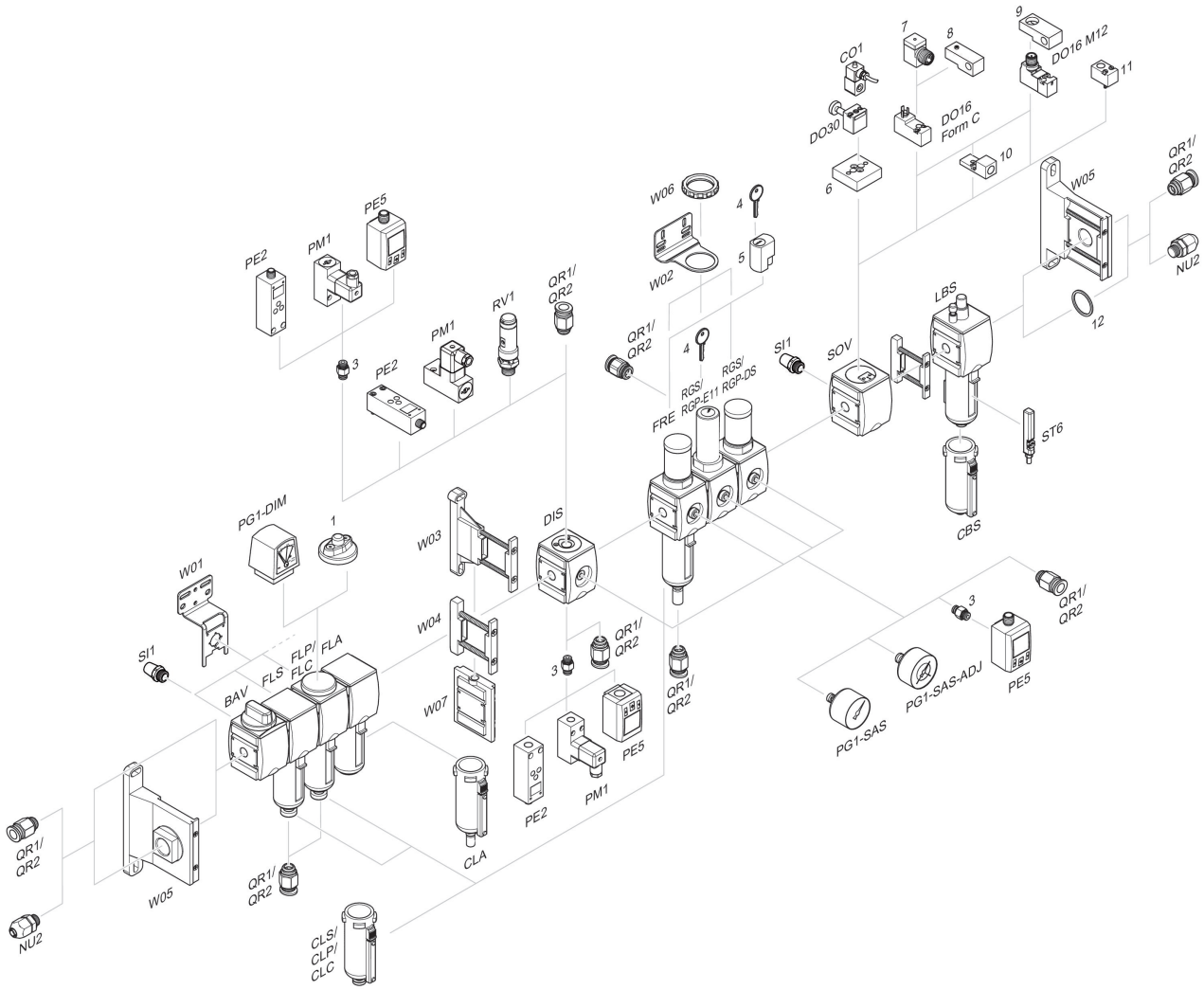

1 = contamination display 3 = Double nipple 4 = Key for E11 locking 5 = mortise lock 6 = Transition plate DO30 7 = Adapter, Series CON-VP 8 = Mounting aid DO16, form C 9 = Mounting aid DO16, M12 10 = Adapter for external pilot air 11 = Adapter pneumatic operation 12 = Sealing ring