87045 LIMOGES Cedex
Telephone: +33(0)5 55 06 87 87 - Fax: +33(0)5 55 06 88 88

Atlantic cabinets

Cat. No(s): 0 355 00/01/02/03/04/05/06/07/08/09/10/12/14
0 355 15/17/18/20/21/22/23/24/26/27/28/29/30/31/32/33/34/36
0 355 37/90/91/92/93/94/95/96/97/98 - 0 354 92/93/94/95/96/97

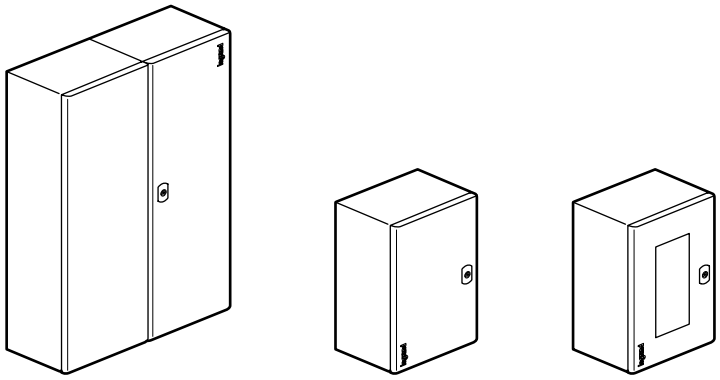

CONTENTS Page

1. General characteristics 1
2. Range.....1
3. Technical characteristics.....2
4. Heat dissipation capacity.....4
5. Dimensions.....5
6. Equipment 7
7. Accessories..... 14

1. GENERAL CHARACTERISTICS

Metal cabinets made of textured polyester coated steel, 80 µm thick.
- RAL 7035
- IP 55 (2 doors), IP 66 (1 door) according to standard IEC EN 60529.
- IK 10 according to standard IEC EN 62262 (EN 50102).
- c UL us , Bureau Veritas, TÜV approvals.
- Conforming to Nema 4x (1 door), Nema 12 (2 doors).
- Height (mm): 300/400/500/600/700/800/1000/1200.
- Width (mm): 200/300/400/500/600/800/1000/1200.
- Depth (mm): 160/200/250/300/400.
- Dimensions: vertical, square, horizontal.
- Reversible doors. Hinges and pins treated with high-performance anti-corrosion coating.
- Double bar lock.
- Equipment fixed directly at the back of the cabinet (self-centering equipment).
- Optional equipment adjustment from height 600 mm x width 600 mm.
- Bottom cable entry plate with symmetrical fixing except for Cat. Nos. 0 355 00/09.
- Increased protection with roof.
- Cabinets fixed with lugs, on plinth or stand.
- Polyurethane gasket.
- Glass door with coloured toughened glass window.
- EMC attenuation 20 dB.
- For creating assemblies conforming to standards IEC 61439-1/01-2009.

2. RANGE

To meet the specific requirements of your projects, the bespoke solutions service offers special drill hole sizes, from 300x200x160 mm to 1400x1000x400 mm, on all the cabinet sections, 180 extra RAL colours and equipment assembly.

RAL 7035 cabinets

• **Vertical version** (external dimensions designated* in mm)

Cat. No.	Height	Width	Depth	Number of doors	Weight (kg)
0 355 09	400	300	160(2)	1	6.3
0 355 00	300	200	160(1)(2)	1	4.2
0 355 02	400	300	200	1	6.5
0 355 03	500	400	200	1	9.7
0 355 04	600	400	200	1	10.7
0 355 07	500	400	250	1	10.7
0 355 08	600	400	250	1	12
0 355 12	700	500	250	1	16.5
0 355 14	800	600	250	1	18.8
0 355 17	1000	600	250	1	24
0 355 18	1000	800	250	1	36.4
0 355 22	700	500	300	1	23
0 355 23	800	600	300	1	28.8
0 355 26	1000	600	300	1	33.3
0 355 27	1000	800	300	1	42
0 355 92	1200	800	300	1	49.6
0 355 93	1200	1000	300	2	62.2
0 355 95	1400	1000	300	2	71
0 355 28	800	600	400	1	31
0 355 29	1000	800	400	1	45
0 355 96	1200	800	400	1	57
0 355 98	1400	800	400	1	64

* : designated dimensions. See section 5 for overall dimensions

• **Square version** (external dimensions designated* in mm)

Cat. No.	Height	Width	Depth	Number of doors	Weight (kg)
0 355 05	300	300	160(2)	1	4.1
0 355 30	300	300	200	1	4.2
0 355 31	400	400	200	1	7.7
0 355 32	500	500	250	1	11.5
0 355 10	600	600	250	1	16.3
0 355 15	800	800	250	1	21.6
0 355 20	600	600	300	1	21.1
0 355 24	800	800	300	1	34.2
0 355 91	1000	1000	300	2	53
0 355 94	1200	1200	300	2	70
0 355 36	600	600	400	1	28
0 355 97	1200	1200	400	2	77

(1) Supplied with solid plate
(2) Without opening
* : designated dimensions. See section 5 for overall dimensions

2. RANGE *(continued)*

RAL 7035 cabinets *(continued)*

• **Horizontal version** (external dimensions in mm)

Cat. No.	Height	Width	Depth	Number of doors	Weight (kg)
0 355 01	300	400	200	1	6.5
0 355 06	400	600	250	1	11.7
0 355 33	800	1000	250	2	27
0 355 21	600	800	300	2	28.8
0 355 37	600	1000	300	2	32
0 355 34	800	1000	300	2	33.3
0 355 90	1000	1200	300	2	62.2

• **With glass door** (external dimensions in mm)
Coloured toughened glass

	External dimensions (mm)			Window dimensions (mm)		
Cat. No.	Height	Width	Depth	Height	Width	Weight (kg)
0 354 92	400	300	200	300	128	6
0 354 93	500	400	200	400	228	8
0 354 94	600	400	250	500	228	10
0 354 95	700	500	250	600	328	15
0 354 96	800	600	300	700	428	25
0 354 97	1000	800	300	850	628	36

3. TECHNICAL CHARACTERISTICS

3.1 Structure
Steel.
Surround: 1.3 mm thick.
Back (H x W): 0.8 thick for cabinet ≤ 600 x 400 and 1.3 thick for cabinet ≥ 600 x 600.

3.2 Door
Steel.
Thickness: 1.2 mm to 1.8 mm depending on dimensions.

3.3 Index of protection
• IP 55 (2 doors) in accordance with standard IEC EN 60529.
Protection against water jets from any direction.
• IP 66 (1 door) in accordance with standard IEC EN 60529.
Unlimited protection against dust and heavy seas.
• IK 10 in accordance with standard IEC EN 62262 (EN 50102).
Nema 4x (1 door), Nema 12 (2 doors).

3.4 Mechanical performance
- Max. load: 500 kg/m^3
- Max. load on door: 5 kg per 100 mm in height.
- Max. static load for set of 4 fixing lugs:
Cat. Nos. 0 364 01/04: 300 kg.
- Fixed on stands Cat. Nos. 0 364 36/37 conforming to standard EN 50125-3.
(Rail applications, fixed installations).

3.5 Resistance to climatic conditions
- Excellent UV resistance - ISO 4892-2 method 500 hrs.
- Salt spray in accordance with ISO 9227, EN 60068- 2-11: 1000 hrs.
- Sulphur dioxide SO_2 with ISO 6988 condensation: 500 hrs.
- Degree of rusting after test RI 1 ISO 4628/1.
- Operating temperature: - 25°C to +70°C (+100°C peak).

3.6 Fire behaviour
- Resistance to incandescent wire in accordance with IEC EN 60695-2-11: 960°C.

3. TECHNICAL CHARACTERISTICS *(continued)*

3.7 Properties of the polyester coating

• **Polyester coated steel**

Application of an 80 µm thick coating of pure polyester by electrostatic dusting.

Coating resistance according to tests
Mechanical characteristics:
- Adhesion according to EN ISO 2409: class 0 to 1.
- Bending on plain mandrel EN ISO 1519: 6 mm no cracks.
- Stamping EN ISO 1520: 8 mm.
- Impact resistance EN ISO 6272-1: 1 kg - 50 cm.

Coating process
Main steps in the process:
- Phosphate coating: the layer of iron phosphate encourages adhesion of the coating
- Neutralisation
- Passivation
- Neutralisation

• **Touching-up polyester**

Aerosol paint can:
0 365 97 RAL 7035
0 365 98 RAL 7032

Touch-up brushes:
Used to protect the sheet steel after cutting.
Anticorrosion paint.
0 365 91 RAL 7035
Other colours on request.

3.8 Resistance to chemical agents
Resistance at ambient temperature related to a risk of exposure by spraying.

Aqueous solutions	Cold water	++
	Hot water	+
	Steam	-
	5% saline solution	+
	Hydrogen peroxide	-
	Water + washing powder	+
	Water + surfactants	+
	Formaldehyde	-
Alcohols	Ethanol	+
	Methanol	+
	Propanol	+
	Butanol	+
Phenols		-
Cresols		-
Bases	Ammonia	+
	Sodium hydroxide (soda)	+
	Sodium hypochlorite (12° bleach)	+
	Potassium hydroxide (potash)	+

3. TECHNICAL CHARACTERISTICS *(continued)*

3.8 Resistance to chemical agents *(continued)*

Strong oxidizing acids	Concentrated acetic acid		+
	5% nitric acid		+
	30% sulphuric acid		+
	30% hydrochloric acid		+
	70% perchloric acid		++
	70% hydrofluoric acid		--
	50% chromic acid		-
	30% phosphoric acid		+
Weak acids	Diluted acetic acid < 25%		+
	Citric acid		++
	Lactic acid		++
	Formic acid		+
	Uric acid		+
Oils and greases	**Of animal origin**	Lard	++
		Butter, cream	++
	Of vegetable origin	Linseed oil	++
		Groundnut/Olive oil	++
		Castor oil	++
		Glycerin	+
	Of mineral origin	Paraffin (Vaseline)	++
		Automotive engine oils	+
		Silicone oils	++
		Cutting oils	++
		Hydraulic oils	+
Hydro-carbons	Lead-free petrol		+
	Diesel		++
	Kerosene		++
	White spirit		++
Chlorinated solvents	Trichloroethylene		--
	Trichlorethane		-
	Perchlorethylene		--
	Methylene chloride		--
	Carbon tetrachloride		--
	Chloroform		-
Aromatic solvents	Benzene		+
	Toluene		-
	Xylene		+
Aliphatic solvents	Hexane		++
	Heptane		++

3. TECHNICAL CHARACTERISTICS *(continued)*

3.8 Resistance to chemical agents *(continued)*

Fluorinated solvents	Trichlorofluoromethane	--
Ketones	Acetone	-
	Methyl ethyl ketone	-
	Ethyl acetate	-
Terpenes	Turpentine	-

++: Excellent resistance (continuous exposure)
+ : Good resistance (lasting exposure)
- : Limited resistance (brief exposure possible)
-- : Poor resistance (exposure to be avoided)

4. HEAT DISSIPATION CAPACITY

Determined by testing the max. capacity of a cabinet to dissipate heat according to standard IEC 62208-1.

Configuration 1 (C1):
All outer surfaces of the cabinet are clear and not in contact with anything (floor standing, on stand or frame for example).

Configuration 2 (C2):
The rear surface is in contact with a wall, all other surfaces are clear (standard case of wall mounting for example).

For other installation configurations, please consult us.

Cat. No.	Dimensions (H x W x D) (mm)	Delta T (K)	Max. power that can be dissipated (W)	Configuration
0 355 00	300 x 200 x 160	30	40	C1
			33	C2
0 355 09	400 x 300 x 160	30	67	C1
			52	C2
0 355 02	400 x 300 x 200	30	75	C1
			60	C2
0 355 03	500 x 400 x 200	30	109	C1
			84	C2
0 355 04	600 x 400 x 200	30	127	C1
			96	C2
0 355 07	500 x 400 x 250	30	122	C1
			97	C2
0 355 08	600 x 400 x 250	30	141	C1
			111	C2
0 355 12	700 x 500 x 250	30	187	C1
			143	C2
0 355 14	800 x 600 x 250	30	239	C1
			179	C2
0 355 17	1000 x 600 x 250	30	288	C1
			212	C2
0 355 18	1000 x 800 x 250	30	360	C1
			259	C2
0 355 22	700 x 500 x 300	30	204	C1
			160	C2
0 355 23	800 x 600 x 300	30	259	C1
			199	C2
0 355 26	1000 x 600 x 300	30	311	C1
			235	C2
0 355 27	1000 x 800 x 300	30	386	C1
			285	C2
0 355 92	1200 x 800 x 300	30	449	C1
			328	C2
0 355 93	1200 x 1000 x 300	30	536	C1
			384	C2
0 355 95	1400 x 1000 x 300	30	611	C1
			434	C2
0 355 28	800 x 600 x 400	30	300	C1
			239	C2
0 355 29	1000 x 800 x 400	30	438	C1
			337	C2
0 355 96	1200 x 800 x 400	30	507	C1
			386	C2
0 355 98	1400 x 800 x 400	30	576	C1
			435	C2

Cat. No.	Dimensions (H x W x D) (mm)	Delta T (K)	Max. power that can be dissipated (W)	Configuration
0 355 05	300 x 300 x 160	30	54	C1
			42	C2
0 355 30	300 x 300 x 200	30	60	C1
			49	C2
0 355 31	400 x 400 x 200	30	92	C1
			72	C2
0 355 32	500 x 500 x 250	30	145	C1
			109	C2
0 355 10	600 x 600 x 250	30	190	C1
			145	C2
0 355 15	800 x 800 x 250	30	300	C1
			219	C2
0 355 20	600 x 600 x 300	30	207	C1
			162	C2
0 355 24	800 x 800 x 300	30	323	C1
			242	C2
0 355 91	1000 x 1000 x 300	30	461	C1
			335	C2
0 355 94	1200 x 1200 x 300	30	622	C1
			441	C2
0 355 36	600 x 600 x 400	30	242	C1
			197	C2
0 355 97	1200 x 1200 x 400	30	691	C1
			510	C2
0 355 01	300 x 400 x 200	30	75	C1
			60	C2
0 355 06	400 x 600 x 250	30	141	C1
			111	C2
0 355 33	800 x 1000 x 250	30	360	C1
			259	C2
0 355 21	600 x 800 x 300	30	259	C1
			199	C2
0 355 37	600 x 1000 x 300	30	311	C1
			235	C2
0 355 34	800 x 1000 x 300	30	386	C1
			285	C2
0 355 90	1000 x 1200 x 300	30	536	C1
			384	C2

Cat. No.	Dimensions (H x W x D) (mm)	Delta T (K)	Max. power that can be dissipated (W)	Configuration
0 354 92	400 x 300 x 200	30	75	C1
			60	C2
0 354 93	500 x 400 x 200	30	109	C1
			84	C2
0 354 94	600 x 400 x 250	30	141	C1
			111	C2
0 354 95	700 x 500 x 250	30	187	C1
			143	C2
0 354 96	800 x 600 x 300	30	259	C1
			199	C2
0 354 97	1000 x 800 x 300	30	386	C1
			285	C2

5. DIMENSIONS

Actual cabinet dimensions

Cat. No.	Height	Width	Depth excluding locks
0 355 09	400	300	170
0 355 00	300	200	
0 355 02	400	300	210
0 355 03	500	400	
0 355 04	600	400	
0 355 07	500	400	260
0 355 08	600	400	
0 355 12	700	500	
0 355 14	800	600	
0 355 17	1000	600	
0 355 18	1000	800	
0 355 22	700	500	310
0 355 23	800	600	
0 355 26	1000	600	
0 355 27	1000	800	
0 355 92	1200	800	
0 355 93	1200	1000	
0 355 95	1400	1000	
0 355 28	800	600	410
0 355 29	1000	800	
0 355 96	1200	800	
0 355 98	1400	800	

Cat. No.	Height	Width	Depth
0 355 05	300	300	170
0 355 30	300	300	210
0 355 31	400	400	
0 355 32	500	500	260
0 355 10	600	600	
0 355 15	800	800	
0 355 20	600	600	310
0 355 24	800	800	
0 355 91	1000	1000	
0 355 94	1200	1200	
0 355 36	600	600	410
0 355 97	1200	1200	

Cat. No.	Height	Width	Depth
0 355 01	300	400	210
0 355 06	400	600	260
0 355 33	800	1000	
0 355 21	600	800	310
0 355 37	600	1000	
0 355 34	800	1000	
0 355 90	1000	1200	

Cat. No.	Height	Width	Depth
0 354 92	400	300	210
0 354 93	500	400	
0 354 94	600	400	260
0 354 95	700	500	
0 354 96	800	600	310
0 354 97	1000	800	

5. DIMENSIONS *(continued)*

Doors

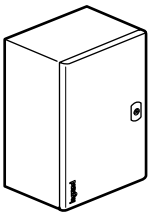

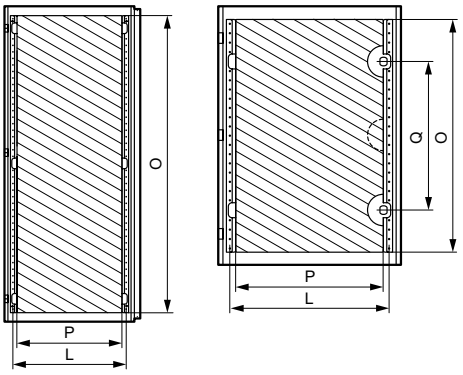

Cat. Nos.	Cabinets		Usable dimensions of doors		Lock position	Cable holder fix. centres
	Height (mm)	Width (mm)	Height O (mm)	Width P (mm)	Q (mm)	L (mm)
0 355 00	300	200	251	148	(1)	(3)
0 355 05/30	300	300	251	248	(1)	(3)
0 355 01	300	400	251	348	(1)	(3)
0 355 02/09	400	300	351	248	(1)	(3)
0 355 31	400	400	351	348	(1)	(3)
0 355 06	400	600	325	500	(1)	530
0 355 03/07	500	400	425	300	(1)	330
0 355 32	500	500	425	400	(1)	430
0 355 04/08	600	400	525	300	350(2)	330
0 355 10/20/36 0 354 60/66	600	600	525	500	350(2)	530
0 355 21 0 354 61	600	800	525	300 × 2	(1)	330
0 355 37	600	1000	525	400 × 2	(1)	430
0 355 12/22	700	500	625	400	400(2)	430
0 355 14/23/28 0 354 62/67	800	600	725	500	500(2)	530
0 355 15/24 0 354 63	800	800	725	700	500(2)	730
0 355 33/34	800	1000	725	400 × 2	(1)	430
0 355 17/26 0 354 64/68	1000	600	925	500	(1)	530
0 355 18/27/29 0 354 65	1000	800	925	700	(1)	730
0 355 91	1000	1000	925	400 x2	(1)	430
0 355 90	1000	1200	925	500 × 2	(1)	530
0 355 92/96	1200	800	1125	700	(1)	730
0 355 93	1200	1000	1125	400 × 2	(1)	430
0 355 94/97	1200	1200	1125	500 × 2	(1)	530
0 355 98	1400	800	1325	700	(1)	730
0 355 95	1400	1000	1325	400 × 2	(1)	430

(1) Central lock
(2) Top or bottom lock
(3) Without cable holder

Atlantic cabinets

Cat. No(s): 0 355 00/01/02/03/04/05/06/07/08/09/10/12/14
0 355 15/17/18/20/21/22/23/24/26/27/28/29/30/31/32/33/34/36
0 355 37/90/91/92/93/94/95/96/97/98 - 0 354 92/93/94/95/96/97

5. DIMENSIONS *(continued)*

Glass door

Coloured toughened glass

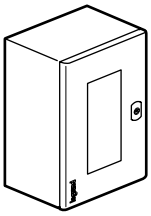

Cat. No.	External dimensions (mm)			Window dimensions	
	Height	Width	Depth	Height	Width
0 354 92	400	300	200	300	148
0 354 93	500	400	200	400	228
0 354 94	600	400	250	500	228
0 354 95	700	500	300	600	328
0 354 96	800	600	300	700	428
0 354 97	1000	800	300	850	628

Usable cabinet depth

Cabinets	At back of cabinet	
Depth (mm)	W (mm)	X (mm)
160	140	125
200	180	165
250	230	215
300	280	265
400	380	365

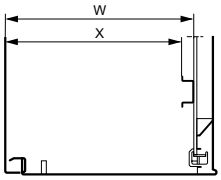

Equipment adjustment (optional)

Cabinets	With runners				
Depth (mm)	Runner Cat No.	W (mm)		X (mm)	
250	0 367 43	93	213	78	198
300	0 367 44	93	263	78	248
400	0 367 45	93	363	78	348

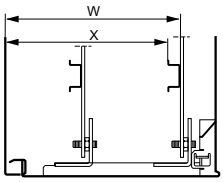

5. DIMENSIONS *(continued)*

Openings in cabinets

Cabinet width ≤ 800 mm

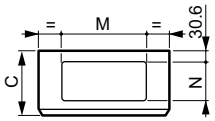

Cabinet width ≥ 1000 mm

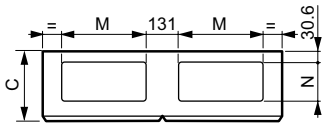

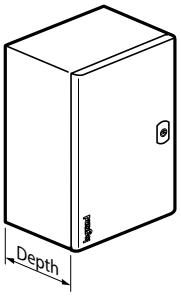

Cabinets		Dimensions of openings	
Width (mm)	Depth (mm)	M (mm)	N (mm)
200	160	-	-
300	160	-	-
300	200	169	115
400	200	269	115
400	250	269	115
500	250	369	150
500	300	369	150
600	250	469	150
600	300	469	150
600	400	469	150
800	250	469	150
800	300	469	150
800	400	469	150
1000	250	369	150
1000	300	369	150
1200	300	469	150
1200	400	469	150

Cabinet fixing

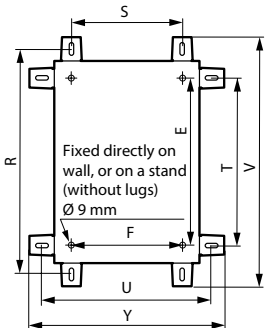

Dimensions in mm

Cabinets		Vertical lugs		Fixing centre	Horizontal lugs		Fixing centre	Overall 0 364 01		Overall 0 364 04	
Height	Width	R	S(1)	E	T(1)	U	F	V	Y	V	Y
300	200	375	150	225	250	275	169	430	330	402	302
300	300	375	250	225	250	375	269	430	430	402	402
300	400	375	350	225	250	475	369	430	530	402	502
400	300	475	250	325	350	375	269	530	430	502	402
400	400	475	350	325	350	475	369	530	530	502	502
400	600	475	550	325	350	675	569	530	630	502	702
500	400	575	350	425	450	475	369	630	530	602	502
500	500	575	450	425	450	575	469	630	630	602	602
600	400	675	350	525	550	475	369	730	530	702	502
600	600	675	550	525	550	675	569	730	730	702	702
600	800	675	750	525	550	875	769	730	930	702	902
600	1000	675	950	525	550	1075	969	730	1130	702	1102
700	500	775	450	625	650	575	469	830	630	802	602
800	600	875	550	725	750	675	569	930	730	902	702
800	800	875	750	725	750	875	769	930	930	902	902
800	1000	875	950	725	750	1075	969	930	1130	902	1102
1000	600	1075	550	925	950	675	569	1130	730	1102	702
1000	800	1075	750	925	950	875	769	1130	930	1102	902
1000	1000	1075	950	925	950	1075	969	1130	1130	1102	1102
1000	1200	1075	1150	925	950	1275	1169	1130	1330	1102	1302
1200	800	1275	750	1125	1150	875	769	1330	930	1302	902
1200	1000	1275	950	1125	1150	1075	969	1330	1130	1302	1102
1200	1200	1275	1150	1125	1150	1275	1169	1330	1330	1302	1302
1400	800	1475	750	1325	1350	875	769	1530	930	1502	902
1400	1000	1475	950	1325	1350	1075	969	1530	1130	1502	1102

(1) Identical fixing centres for Cat. No. 0 364 01 and Cat. No. 0 364 04.

6. EQUIPMENT

6.1 Equipment fixed directly at the back of the cabinet (M8 screws)

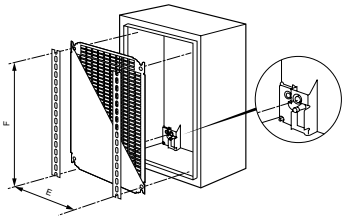

- or runner adjusted with M8 nut (optional)

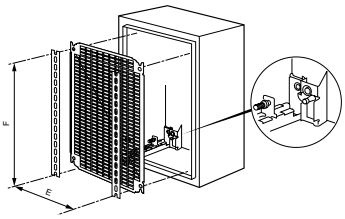

Equipment adjustment
Possible from cabinet size ≥ 600 x 600 upwards.
With Cat. Nos. 0 367 43/44/45.
Set of 4 runners for cabinet depths 250, 300 and 400.

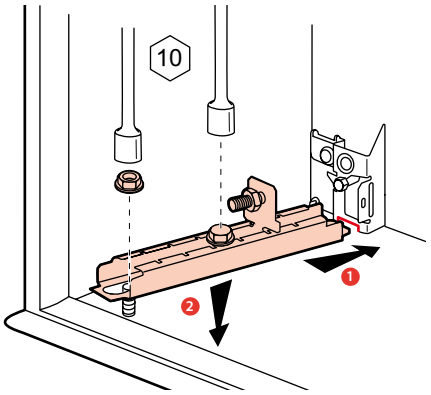

6.2 Solid plates, Lina 12.5 and Lina 25

- Galvanised steel solid plates and Lina 12.5
- Lina 12.5: with drill holes to enable equipment to be installed without marking up, automatic alignment.
- Lina 25: zinc-plated steel.

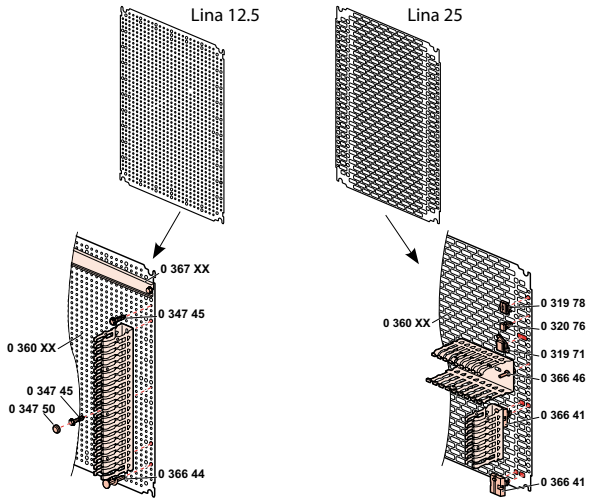

6. EQUIPMENT *(continued)*

6.2 Solid plates, Lina 12.5 and Lina 25 *(continued)*

• Dimensions
Lina 12.5 solid plates and Lina 25 perforated plates

Solid

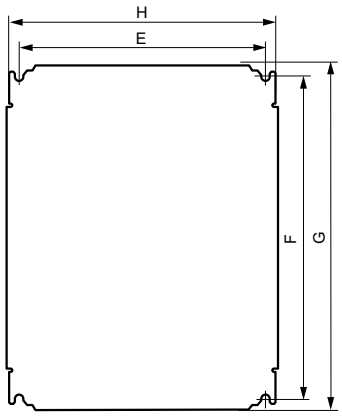

Detail of Lina 12.5

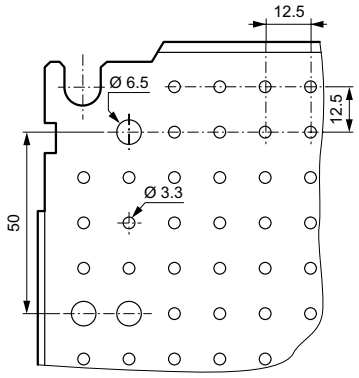

Detail of perforated Lina 25

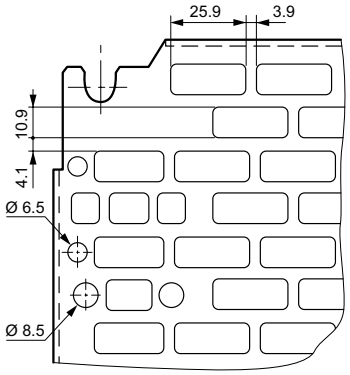

6. EQUIPMENT *(continued)*

• Dimensions in mm *(continued)*

Lina 12.5 solid plates and Lina 25 perforated plates

Cabinets		Lina 12.5/Lina 25 solid plates		Usable equipment area (dm^2)	Plate fixing		Solid	Lina 12.5	Lina 25
Height	Width	G	H		F	E	Cat. No.	Cat. No.	Cat. No.
300	200	256	156	4.2	225	125		0 360 00	0 360 07
300	300	256	256	6.2	225	225	0 360 69	0 360 02	0 360 91
300	400(1)	256	256	8.2	225	325	0 360 52	0 360 04	0 360 11
400	300(1)	356	256	8.2	325	225	0 360 52	0 360 04	0 360 12
400	400	356	356	11.7	325	325	0 360 72	0 360 05	0 360 92
400	600(1)	356	556	18.7	325	525	0 360 56	0 360 22	0 360 13
500	400	456	356	15.2	425	325	0 360 55	0 360 09	0 360 15
500	500	456	456	19.2	425	425	0 360 71	0 360 14	0 360 93
600	400(1)	556	356	18.7	525	325	0 360 56	0 360 22	0 360 16
600	600	556	556	29.7	525	525	0 360 57	0 360 24	0 360 17
600	800(1)	556	756	40.7	525	725	0 360 59	0 360 33	0 360 06
600	1000(1)	556	956	51.7	525	925	0 360 54	0 360 40	0 360 08
700	500	656	456	28.7	625	425	0 360 58	0 360 31	0 360 18
800	600(1)	756	556	40.7	725	525	0 360 59	0 360 33	0 360 19
800	800	756	756	55.7	725	725	0 360 60	0 360 34	0 360 20
800	1000(1)	756	956	71.7	725	925	0 360 61	0 360 42	0 360 94
1000	600(1)	956	556	51.7	925	525	0 360 54	0 360 40	0 360 23
1000	800(1)	956	756	70.7	925	725	0 360 61	0 360 42	0 360 21
1000	1000	956	956	89.7	925	925	0 360 63	0 360 43	0 360 25
1000	1200(1)	956	1156	108.7	925	1125	0 360 65	0 360 47	0 360 10
1200	800	1156	756	85.7	1125	725	0 360 64	0 360 46	0 360 87
1200	1000(1)	1156	956	108.7	1125	925	0 360 65	0 360 47	0 360 88
1200	1200	1156	1156	131.7	1125	1125	0 360 66	0 360 48	0 360 89
1400	800	1356	756	100.7	1325	725	0 360 67	0 360 75	0 360 90
1400	1000	1356	956	127.7	1325	925	0 360 68	0 360 79	0 360 98

(1) For use in horizontal (cabinet dimensions the other way round) or vertical mounting.

5.3 Lina 25 sectioned uprights and rails for creating the chassis

Lina 25 sectioned uprights

Cat. Nos. 0 361 50/51/52/53/54/55/56

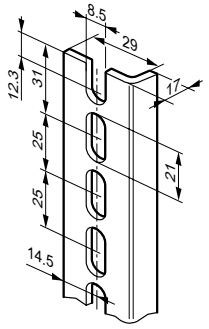

Cat. Nos. 0 361 58/59

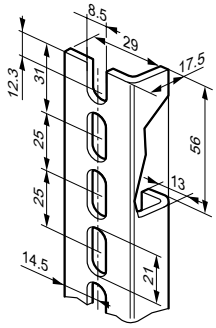

Sectioned uprights for cutting to length

Cat. No. 0 361 92

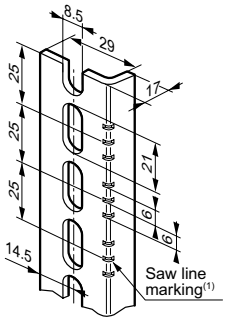

(1) Saw line marking for upright length at 25 mm intervals.
The other two are used to obtain the length of uprights
Cat. Nos. 0 361 50/51/52/53/54/55/56.

Cabinet height (mm)	Upright length (mm)	Upright Cat. No. (set of 2)
300	237	0 361 50
400	337	0 361 51
500	437	0 361 52
600	537	0 361 53
700	637	0 361 54
800	737	0 361 55
1000	937	0 361 56
1200	1137	0 361 58
1400	1337	0 361 59
3 m upright for cutting to length		0 361 92

6. EQUIPMENT *(continued)*

6.4 Rails

Cat. No. 0 374 02

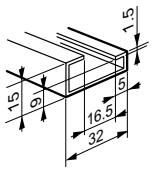

Cat. No. 0 477 22

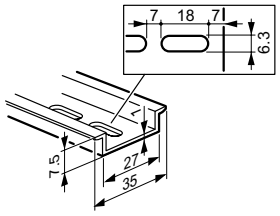

Cat. Nos. 0 367 80/81/82/83/84/85/86
Cat. No. 0 374 07

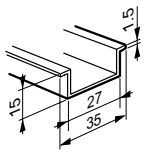

Cat. No. 0 477 23

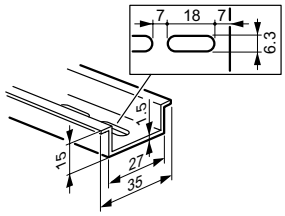

Cabinet width (mm)	Rail length (mm)	⌐¬ rail Cat. No.
300	243	0 367 80
400	343	0 367 81
500	443	0 367 82
600	543	0 367 83
800	743	0 367 84
1000	943	0 367 85
1200	1143	0 367 86

2 m rail for cutting to length

Cat. No. 0 374 02 asymmetrical ⌐¬ according to standard EN 60715

Cat. No. 0 374 07 symmetrical ⌐¬ 15 mm deep

Cat. No. 0 477 22 symmetrical ⌐¬ 7.5 mm deep with oblong holes

Cat. No. 0 477 23 symmetrical ⌐¬ 15 mm deep with oblong holes.

Assembled chassis with Lina 25 uprights and rails

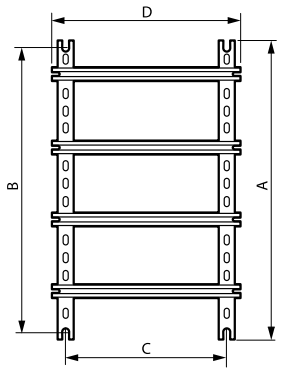

6. EQUIPMENT *(continued)*

Assembled chassis with Lina 25 uprights and rails *(continued)*

Cabinet dimensions (mm)		Upright height	Rail length	Chassis fixing	
Height	Width	A	D	B	C
300	300	237	243	225	225
300	400	237	343	225	325
400	300	337	243	325	225
400	400	337	343	325	325
400	600	337	543	325	525
500	400	437	343	425	325
500	500	437	443	425	425
600	400	537	343	525	325
600	600	537	543	525	525
600	800	537	743	525	725
600	1000	537	943	525	925
700	500	637	443	625	425
800	600	737	543	725	525
800	800	737	743	725	725
800	1000	737	943	725	925
1000	600	937	543	925	525
1000	800	937	743	925	725
1000	1000	937	943	925	925
1000	1200	937	1143	925	1125
1200	800	1137	743	1125	725
1200	1000	1137	943	1125	925
1200	1200	1137	1143	1125	1125
1400	800	1337	743	1325	725
1400	1000	1337	943	1325	925

6.5 Metal internal doors (RAL 7035)

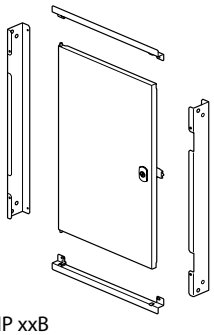

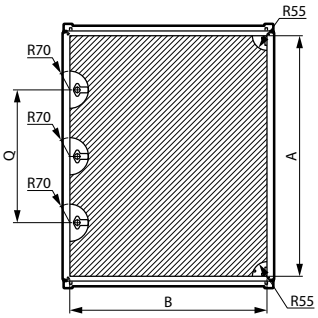

IP xxB
Steel 1.2 mm thick up to and including H 700 mm, 1.5 mm thereafter.
Distance between cabinet door and internal door: 63 mm.
Reversible door.
Captive hinge pins.
Double bar lock: 1 lock for height up to and including 600 mm and 2 locks thereafter.
Take key barrels and other inserts.

Internal door Cat. Nos.	For cabinets (mm)		Usable dimensions (mm)		Lock positions (mm)
	Height	Width	A	B	Q
0 363 15	400	300	306	242	(1)
0 363 16	500	400	406	342	(1)
0 363 17	600	400	506	342	(1)
0 363 18	700	500	606	442	(1)
0 363 19	800	600	706	542	(1)
0 363 20	1000	600	906	542	500
0 363 21	1000	800	906	742	500
0 363 22	1200	600	1106	542	500
0 363 23	1200	800	1106	742	500

(1) Just 1 lock in the centre

6. EQUIPMENT *(continued)*

6.6 Insulated internal doors (RAL 7035)

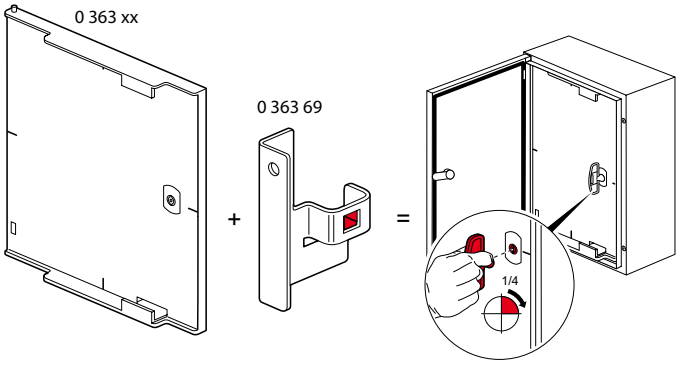

Fitted with Cat. No. 0 363 69.
IP xxB
Glass fibre reinforced polyester, thickness: 4 mm.
Self-extinguishing at 960°C according to IEC EN 60695-2-11.
Chequer pattern integrated on rear surface.
Centre marked on front panel.
Distance between cabinet door and internal door can be adjusted:
42 to 50 mm for Atlantic cabinets.
Right or left-hand opening with built-in handle lever.
Captive hinge pins.
Double bar lock: 1 lock for height 400 to 600 mm, 2 locks from height 700 mm upwards.
Take key barrels and other inserts.

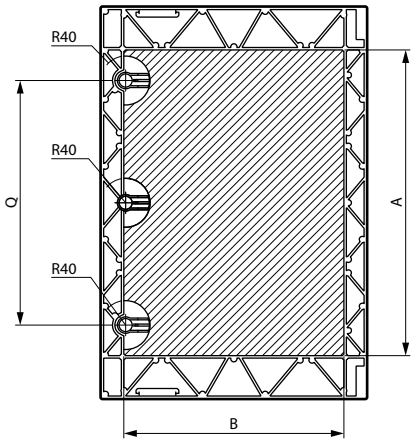

Internal door Cat. Nos.	For cabinets (mm)		Usable dimensions (mm)		Lock positions (mm)
	Height	Width	A	B	Q
0 363 59	400	300	306	205	(1)
0 363 60	500	400	406	270	(1)
0 363 61	600	400	505	270	(1)
0 363 62	700	500	500	360	400
0 363 63	800	600	600	460	500
0 363 64	1000	800	800	660	460
0 363 65 (2)	1200	800	800	660	460

(2) Door identical to Cat. No. 0 363 64 with 200 mm reserve space at top or bottom

(1) Just 1 lock in the centre

6. EQUIPMENT *(continued)*

6.7 Chassis with insulated faceplates (RAL 7035)

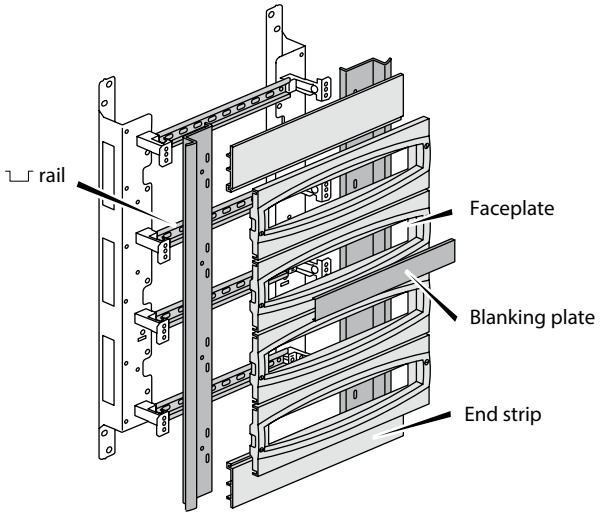

Cabinet	Chassis	
H x W x D (mm)	Cat. No.	Capacity
400 x 300 x 200	0 361 01	3 rows of 10 modules
500 x 400 x 200	0 361 02	3 rows of 16 modules
600 x 400 x 250	0 361 03	3 rows of 16 modules
700 x 500 x 250	0 361 05	4 rows of 21 modules
800 x 600 x 300	0 361 06	4 rows of 27 modules
1000 x 800 x 300	0 361 09	5 rows of 38 modules
1200 x 800 x 300	0 361 10	6 rows of 38 modules

Mounting plate for chassis

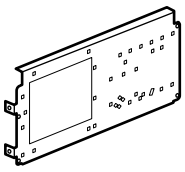

Chassis		Mounting plate	
Cat. No.	H x W x D (mm)	Cat. No.	For power equipment
0 361 06	800 x 600 x 300	0 360 44	DPX³ 160, Vistop 160 A
0 361 09	1000 x 800 x 300	0 360 45	DPX³ 160, DPX³ 250, Vistop 160A
0 361 10	1200 x 800 x 300		

6. EQUIPMENT *(continued)*

6.8 VDI chassis

For integrating 19" VDI equipment in Atlantic cabinets at least 600 or 800 mm wide and 250 mm deep.
For 400 mm wide cabinets, the chassis can be used to integrate the VDI equipment in the mini XL VDI cabinet.
Can be fixed directly on the wall to create a wall-mounted chassis (without cabinet).

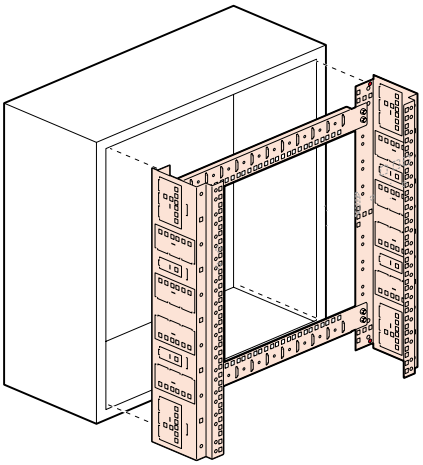

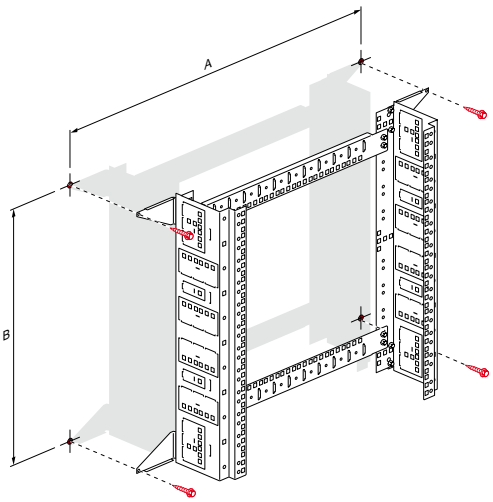

Cat. No.	A (mm)	B (mm)
0 462 27	725	325
0 462 28	725	525
0 462 29	725	725

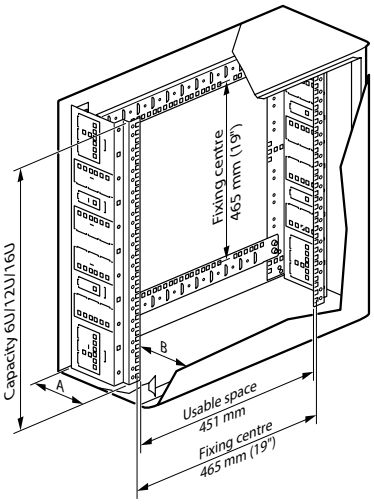

Atlantic cabinets					
Chassis Cat. Nos.	Capacity	Cat. Nos.	Dimensions	Usable dimensions under door	
				A (mm)	B (mm)
0 462 27	6 U	0 355 06	400 x 600 x 250	145	105
0 462 28	12 U	0 355 08 - 0 354 94	600 x 400 x 250	145	105
0 462 28	12 U	0 355 10	600 x 600 x 250	145	105
0 462 28	12 U	0 355 20	600 x 600 x 300	145	155
0 462 28	12 U	0 355 36	600 x 600 x 400	145	255
0 462 28	12 U	0 355 21	600 x 800 x 300	145	155
0 462 29	16 U	0 355 14	800 x 600 x 250	145	105
0 462 29	16 U	0 355 23 - 0 354 96	800 x 600 x 300	145	155
0 462 29	16 U	0 355 28	800 x 600 x 400	145	255
0 462 29	16 U	0 355 15	800 x 800 x 250	145	105
0 462 29	16 U	0 355 24	800 x 800 x 300	145	155

6.9 Cabinet fixing

Directly on wall or with fixing lugs

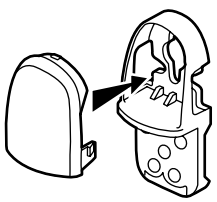

Cat. No. 0 364 01

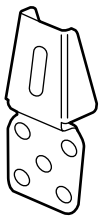

Cat. Nos. 0 364 06/16

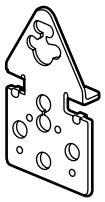

Cat. No. 0 364 04

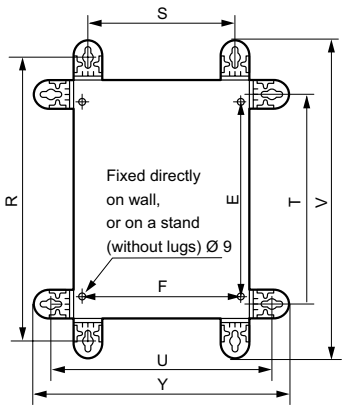

Cat. No. 0 364 01

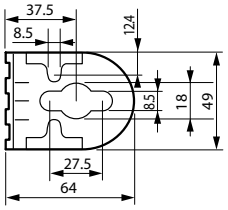

Cat. No. 0 364 04

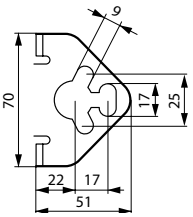

6. EQUIPMENT *(continued)*

6.9 Cabinet fixing *(continued)*

Directly on wall or with fixing lugs
(dimensions in mm)

Cabinets		Vertical lugs		Fixing centre	Horizontal lugs		Fixing centre	Overall 0 364 01		Overall 0 364 04	
Height	Width	R	S[1]	E	T[1]	U	F	V	Y	V	Y
300	200	375	150	225	250	275	169	430	330	402	302
300	300	375	250	225	250	375	269	430	430	402	402
300	400	375	350	225	250	475	369	430	530	402	502
400	300	475	250	325	350	375	269	530	430	502	402
400	400	475	350	325	350	475	369	530	530	502	502
400	600	475	550	325	350	675	569	530	530	502	702
500	400	575	350	425	450	475	369	630	530	602	502
500	500	575	450	425	450	575	469	630	630	602	602
600	400	675	350	525	550	475	369	730	630	702	502
600	600	675	550	525	550	675	569	730	730	702	702
600	800	675	750	525	550	875	769	730	730	702	902
600	1000	675	950	525	550	1075	969	730	730	702	1102
700	500	775	450	625	650	575	469	830	730	802	602
800	600	875	550	725	750	675	569	930	830	902	702
800	800	875	750	725	750	875	769	930	930	902	902
800	1000	875	950	725	750	1075	969	930	930	902	1102
1000	600	1075	550	925	950	675	569	1130	930	1102	702
1000	800	1075	750	925	950	875	769	1130	1130	1102	902
1000	1000	1075	950	925	950	1075	969	1130	1130	1102	1102
1000	1200	1075	1150	925	950	1275	1169	1130	1130	1102	1302
1200	800	1275	750	1125	1150	875	769	1330	1130	1302	902
1200	1000	1275	950	1125	1150	1075	969	1330	1330	1302	1102
1200	1200	1275	1150	1125	1150	1275	1169	1330	1330	1302	1302
1400	800	1475	750	1325	1350	875	769	1530	1530	1502	902
1400	1000	1475	950	1325	1350	1075	969	1530	1530	1502	1102

[1] Identical fixing centres for Cat. No. 0 364 01 and Cat. No. 0 364 04.

Fixed to floor on a stand
Cat. Nos. 0 364 36, 0 364 37

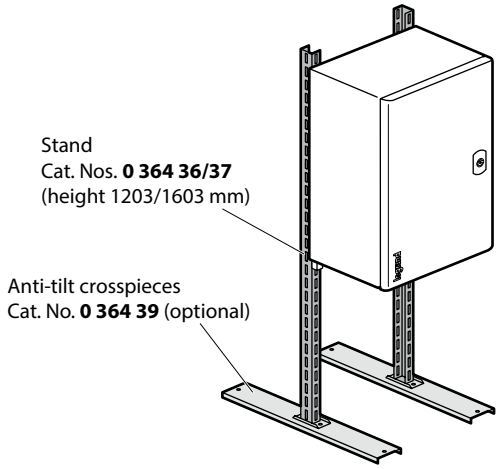

Fixed on a post

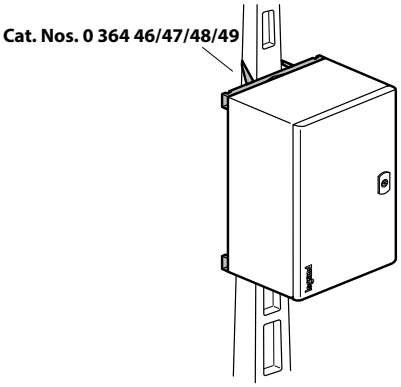

6. EQUIPMENT *(continued)*

6.9 Cabinet fixing *(continued)*

Fixed to floor on a plinth
Front and side traps
RAL 7021
300 and 400 mm deep

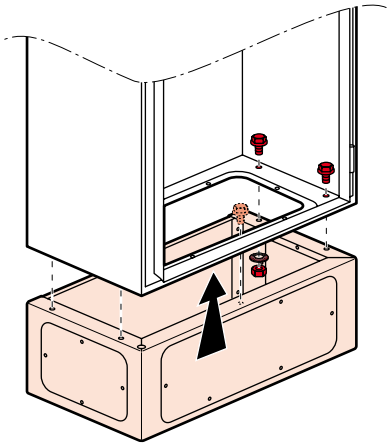

Passage through front access cover

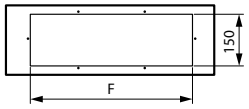

View from below - Fixing to the floor

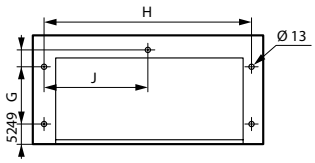

View from above - Cabinet fixing

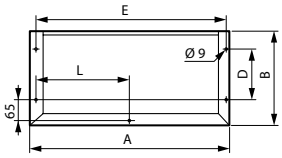

Passage through side access covers

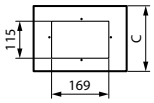

Cat. No.	Cabinets W x D (mm)	A	B	C	D	E	F	G	H	J	L
0 363 40	600 × 400	600	380	200	250	574	469	250	542	271	287
0 363 41	800 × 400	800	380	200	250	774	469	250	742	371	387
0 363 43	1200 × 400	1200	380	200	250	1174	469 × 2	250	1142	571	587
0 363 00	600 × 300	600	280	200	150	574	469	150	542	271	287
0 363 01	800 × 300	800	280	200	150	774	469	150	742	371	387
0 363 02	1000 × 300	1000	280	200	150	974	369 × 2	150	942	471	487
0 363 03	1200 × 300	1200	280	200	150	1174	469 × 2	150	1142	571	587

6. EQUIPMENT *(continued)*

6.10 Roofs

Steel RAL 7035
Possible 20 mm adjustment at front or back

Roof Cat. No.	Width (mm)	Depth (mm)
0 365 51	300	200
0 365 52	400	200
0 365 53	400	250
0 365 64	500	250
0 365 54	600	250
0 365 56	600	300
0 365 57	800	300
0 365 61	1000	300
0 365 63	1200	300
0 365 60	800	400
0 365 62	1200	400

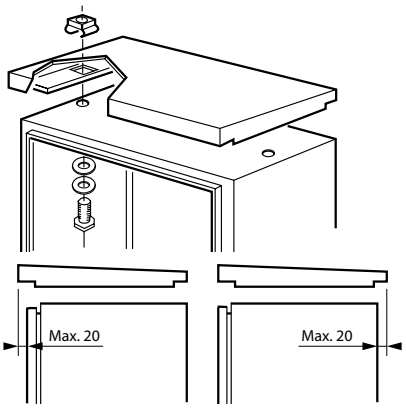

Cat. Nos.	C (mm)
0 365 51/52	100
0 365 53/54/64	125
0 365 56/57/61/63	150
0 365 60/62	200

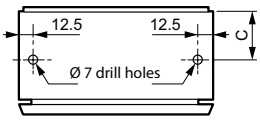

7. ACCESSORIES

7.1 Cable entry plates

IP 55 Cabstop plates

Cable entries consisting of a cable clamp providing mechanical strength, and elastomer areas ensuring a tight seal.
Can be pierced directly with the cable (no tool required).
Fits the cable snugly.
Cable can be replaced.
Flame-retardant polypropylene RAL 7035.

- Cable entry plates have a number of pierceable openings of different sizes: Ø 5 to 14, Ø 14 to 24 and rectangular reserve spaces.
- Performance:
  Resistance to ASTM no. 3 cutting oils
  Resistance to incandescent wire: 750°C according to IEC 60695-2-11
  Tensile resistance: 15 kg minimum
  Operating temperature: -20°C to +65°C
  A foam gasket with a cross-section of 16 x 10 ensures a tight seal between the plates.

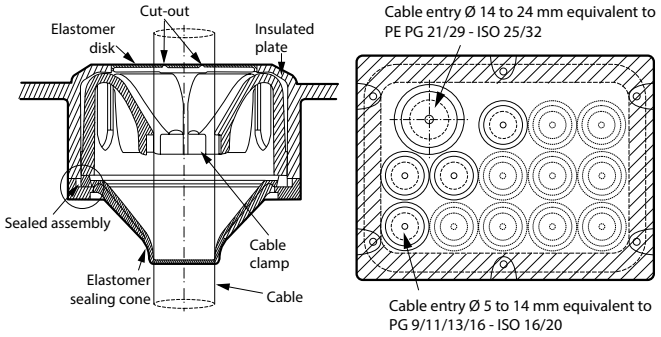

Good resistance to sodium chloride (15%), sulphuric acid (98%) and caustic soda (50%).

- **Plate Cat. No. 0 364 94**
  For cabinets size 300 x 200
  13 entries Ø 5 to 14
  1 entry Ø 14 to 24

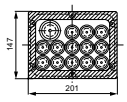

- **Plate Cat. No. 0 364 95**
  For cabinets size 400 x 200/250
  13 entries Ø 5 to 14
  1 entry Ø 14 to 24
  1 rectangular reserve space 98 x 110

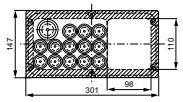

- **Plate Cat. No. 0 364 96**
  For cabinets size 500 x 1000 x 250/300
  28 entries Ø 5 to 14
  2 entries Ø 14 to 24
  1 rectangular reserve space 97 x 145

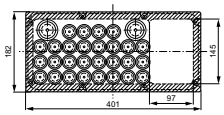

- **Plate Cat. No. 0 364 97**
  For cabinets size 600 x 250 to 400,
  800 x 250 to 400
  and 1200 x 300/400
  28 entries Ø 5 to 14
  2 entries Ø 14 to 24
  2 rectangular reserve spaces 97 x 145

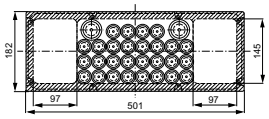

- **IP 43 cable entry plate with brush seal Cat. No. 0 329 46**
  For cabinet
  600 or 800 mm wide.
  Usable space 385 x 30 mm



- **IP 55 plate with multi-entry cable glands Cat. No. 0 329 47**
  For cabinet
  600 or 800 mm wide.
  Supplied with 12 ISO 32 cable glands Cat. No. 0 980 50.
  Each cable gland can take 4 UTP/FTP/SFTP cables (Ø 6.5 to 9.5 mm).
  Cords with connectors can be fed through without having to dismantle the cable gland.
  Supplied with blanking plates for unused entries.



7. ACCESSORIES *(continued)*

7.2 Hinged inspection windows in door

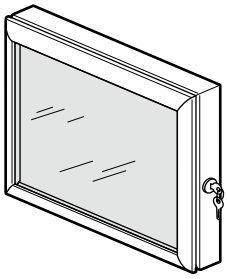

IP54
Anodised aluminium frame, 120° opening.
Window, 3 mm thick polycarbonate. Neoprene seal.
455 key lock.
Supplied with drilling template.
Protect equipment, prevent accidental operation and can be used to view devices at the front.

Cat. No.	External dimensions (mm)			Window dimensions (mm)		Usable depth (mm)
	Height	Width	Depth	Height	Width	
0 475 45	300	400	50	230	330	42
0 475 46	400	400	50	330	330	42
0 475 47	500	500	50	430	430	42
0 475 48	600	400	50	530	330	42
0 475 49	600	600	50	530	530	42

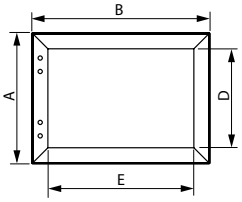

Cat. No.	Dimensions (mm)			
	A	B	D	E
0 475 45	300	400	230	330
0 475 46	400	400	330	330
0 475 47	500	500	430	430
0 475 48	600	400	530	330
0 475 49	600	600	530	530

7.3 Self-adhesive plastic document holders

- **Cat. No. 0 365 80**, 340 x 235 mm (Internal dimensions: 310 x 200 x 18 mm) and Cat. No. 0 365 81, 260 x 165 mm (Internal dimensions: 230 x 130 x 18 mm)
  Open - RAL 7035.

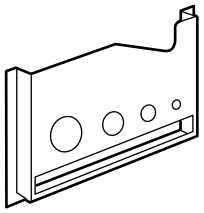

- **Cat. No. 0 365 82**, 325 x 120 mm (Internal dimensions: 324 x 120 x 18 mm)
  Closed IP 50. RAL 9002.
  Holds around fifteen A4 sheets folded in half.

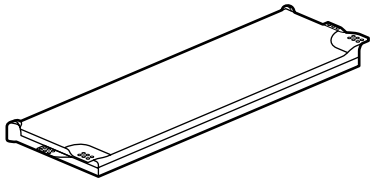

- **Cat. No. 0 097 99**, 305 x 220 mm (A4 format)
  Clear soft plastic.

7. ACCESSORIES *(continued)*

7.4 Door contact

Cat. No. 0 363 13
3 A - 240 V
1 NC contact - 1 NO contact
Used, for example, to switch off the air conditioning and supply power to the light as soon as an enclosure door is opened.
Supplied with fixing lugs.

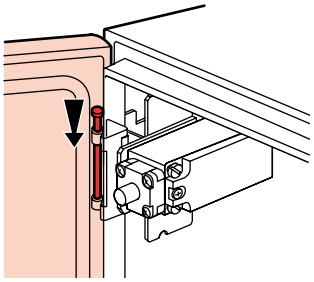

7.5 Lighting kit

Cat. No. 0 363 12
Supplied with 8 W fluorescent tube - Ø 16 mm - 230 V - 50 Hz
Class I - IP 20
Interference suppression in accordance with EN 50015
Equipped with a switch
Connection via bar
Dimensions: 350 x 61 37 mm

7.6 Terminal block support

Cat. No. 0 367 36
Set of two support brackets for copper bar or rail for terminal block.

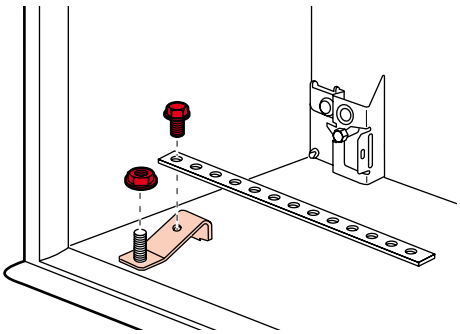

7.7 180° hinges

Cat. Nos. 0 367 32/33
Used to open cabinet doors 180° by replacing the existing hinges without drilling.

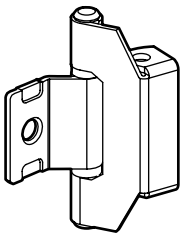

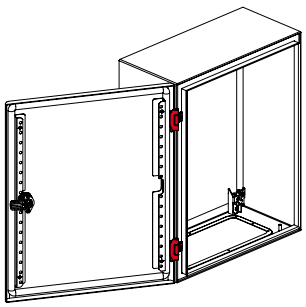

7. ACCESSORIES *(continued)*

7.8 Locks

Double bar lock.

Insert can be replaced with a key barrel on cabinets with maximum height 300 mm, thereafter replace the lock with a handle.

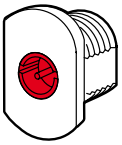

Number of locking points:

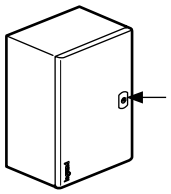

1 point

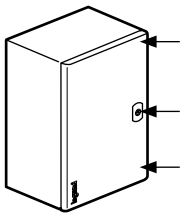

3 points

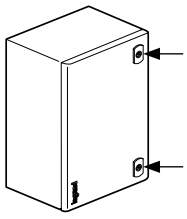

2 points

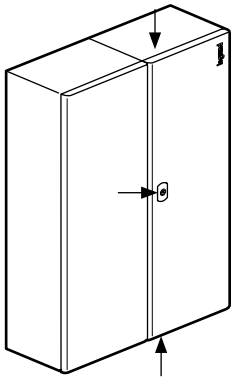

3 points

Cabinets		Number of locking points	Number of locks
Height (mm)	Width (mm)		
300	200	1	1
300	300	1	1
300	400	1	1
400	300	1	1
400	400	1	1
400	600	1	1
500	400	1	1
500	500	1	1
600	400	2	2
600	600	2	2
600	800	3	1
600	1000	3	1
700	500	2	2
800	800	2	1
800	1000	3	1
1000	600	3	1
1000	800	3	1
1000	1000	3	1
1000	1200	3	1
1200	800	3	1
1200	1000	3	1
1200	1200	3	1
1400	800	3	1
1400	1000	3	1

7. ACCESSORIES *(continued)*

7.8 Locks *(continued)*

Cat. Nos.

0 368 04 Lock 

0 368 05 Handle with blanking plate 

0 368 06 Key-operated handle 2433A 

0 368 29 CNOMO locking kit with a 6.5 mm male triangle 

Metal inserts

Cat. Nos.	Description
0 368 13	6 mm female square
0 368 16	8 mm male square
0 368 17	6.5 mm male triangle
0 368 18	8 mm male triangle
0 368 19	11 mm male triangle (EDF)
0 368 20	Double bar

Key barrel

Cat. Nos.	Key code
0 368 22	405
0 368 23	421
0 368 24	455
0 368 25	1242 E
0 368 26	2433 A
0 368 27	3113 A

Connecting rod kit

Locking kits consisting of a handle with 2433A lock and connecting rod, which allow the double bar lock to be replaced by a handle.

Cat. Nos.	For cabinet height
0 368 08	600 mm
0 368 09	700 mm
0 368 10	800 mm