F82C - Oil removal filters
Excelon® Plus Modular System



- Port size: 1/4" & 3/8" (ISO G/PTF)
- Excelon® Plus design allows in-line installation or modular installation with other Excelon® Plus products
- High efficiency oil and particle removal
- Double safety lock bowl
- Metal bowl with prismatic liquid level indicator lens
- Light weight Polycarbonate bowl
- Service indicator standard
- Ex DoC in accordance with 2014/34/EU/ATEX
- Air purity class in accordance with ISO8573-1:2010: 1:7:1*

*Tested in accordance with the methods laid out in ISO 12500-1 using an inlet oil aerosol concentration of 4mg/m³

Technical features

Medium:
Compressed air only

Maximum operating pressure:
Polycarbonate bowl:
10 bar (145 psi)
Metal bowl: 17 bar (246 psi)

Remaining oil content:
0,01 mg/m³ at +21°C (+69°F)

Particle removal:
To 0,01 µm

Port size:
G1/4, G3/8, 1/4 PTF, 3/8 PTF

Flow:
5.5 dm³/s - Maximum flow to maintain stated oil removal performance at challenge rate of 4 mg/m³, operating pressure: 6,3 bar (91 psi)

Drain:
Manual or automatic
Automatic drain operating conditions (float operated):
Bowl pressure required to close drain: > 0,35 bar (5 psi)
Bowl pressure required to open drain: ≤ 0,2 bar (2.9 psi)
Minimum air flow required to close drain: 1 dm³/s.

Ambient/Media temperature:
Polycarbonate bowl:
-10 ... +60°C (+14 ... +140°F)
Metal bowl:
-20 ... +65°C (-4 ... +149°F)
Air supply must be dry enough to avoid ice formation at temperatures below +2°C (+35°F).
Note: Install an F82G filter with a 5 µm filter element upstream of the F82C filter for maximum service life.

Atex:
Filters F82 are in conformity with Atex 2014/34/EU
Ex II 2 GD
Ex h IIC T6 Gb
EX h IIIC T85°C Db

Materials:
Body: Die cast aluminium
Body covers: ABS
Transparent Bowl : Polycarbonate with Polypropylene Guard.
Metal Bowl: Die cast Zinc with PA liquid level indicator lens
Filter element:
Synthetic fibre & PE foam
Bowl 'o'- ring: Chloroprene
Elastomers: NBR

Technical data F82C — standard models

Symbol	Port Size	Drain	Bowl	Weight (kg)	Model
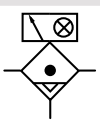	G1/4	Auto	Guarded polycarbonate	0,25	F82C-2GD-AP0
	G3/8	Auto	Guarded polycarbonate	0,25	F82C-3GD-AP0
	G1/4	Auto	Metal with level indicator	0,44	F82C-2GD-AD0
	G3/8	Auto	Metal with level indicator	0,44	F82C-3GD-AD0
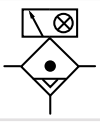	G1/4	Manual	Guarded polycarbonate	0,25	F82C-2GD-QP0
	G3/8	Manual	Guarded polycarbonate	0,25	F82C-3GD-QP0
	G1/4	Manual	Metal with level indicator	0,44	F82C-2GD-QD0
	G3/8	Manual	Metal with level indicator	0,44	F82C-3GD-QD0

Our policy is one of continued research and development. We therefore reserve the right to amend, without notice, the specifications given in this document. (2017 - 9217b) © 2020 Norgren Ltd

Option selector

F82C–★★ D – ★★0

Port size	Substitute
1/4"	2
3/8"	3
Thread form	**Substitute**
PTF	A
ISO G (standard)	G

Bowl	Substitute
Transparent with guard (standard)	P
Metal with liquid indicator (optional)	D
Drain	**Substitute**
Manual (standard)	Q
Auto drain (standard)	A

Flow characteristics

Port size: 1/4"
Oil Removal Flow

Inlet Pressure (bar)	Flow-rate to maintain media velocity of ISO12500-1 test on oil coalescing filter (dm^3/s)
2.5	2,6
4	3,7
6.3	5,5
8	6,8
10	8,3

Dry Flow

Port size: 1/4"

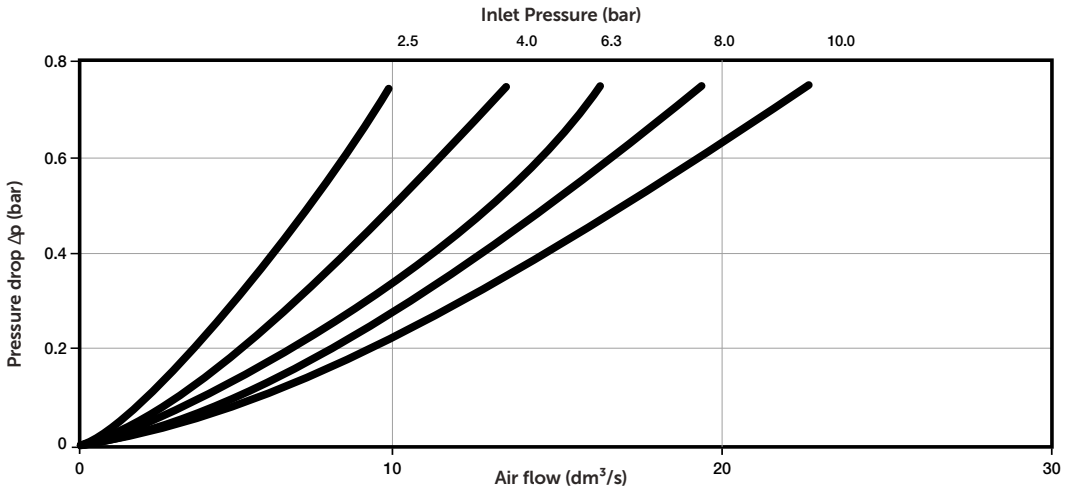

Port size: 3/8"

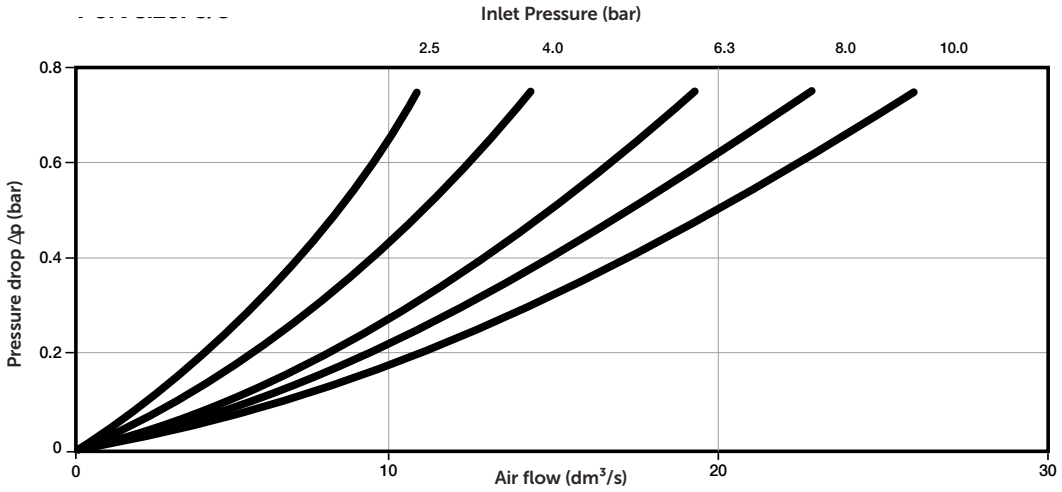

Our policy is one of continued research and development. We therefore reserve the right to amend, without notice, the specifications given in this document. (2017 - 9217b) © 2020 Norgren Ltd

Accessories

Wall mounting bracket



Page 4

820024-50KIT

Quikclamp



Page 4

820014-51KIT

Quikclamp
with bracket assembled



Page 4

820014-52KIT

Pressure sensing block
1/4 PTF



Page 4

820016-50KIT

Pressure sensing block
G1/4



Page 4

820016-51KIT

Full flow porting block
3/8" PTF



Page 4

820028-50KIT

Full flow porting block
G3/8



Page 4

820028-53KIT

Pressure switch interface block
(18D pressure switch)



Page 5

0523109000000000

Pneumatic pressure switch
18D (0,5 ... 8 bar) *1)



Page 5

0881300

Digital pressure switch
51D (-1 ... 10 bar) *2)



Page 5

0860810

*1) Flanged version. For other pressure ranges, please see data sheet 5.11.001
*2) For other pressure ranges, please see data sheet 5.11.385

Port Adaptors
1/4 PTF



Page 5

820015-02KIT

Port Adaptors
3/8 PTF



Page 5

820015-03KIT

Port Adaptors
G1/4



Page 5

820015-08KIT

Port Adaptors
G3/8



Page 5

820015-09KIT

Our policy is one of continued research and development. We therefore reserve the right to amend, without notice, the specifications given in this document. (2017 - 9217b) © 2020 Norgren Ltd

Maintenance/Service

Filter element
0,01µm



820044-50KIT

Auto drain kit with
metal Nut - Imperial



6000-61KIT

Auto drain kit with
metal Nut - Metric



6000-60KIT

Spare parts

Filter Bowl (Guarded Poly bowl with auto drain 6 mm PIF)



820025-51KIT

Filter Bowl (Guarded Poly bowl with manual drain)



820025-50KIT

Filter Bowl (Metal with S/Glass & auto drain, 6 mm PIF)



820003-51KIT

Filter Bowl (Metal with S/Glass & manual drain)



820003-50KIT

Filter Bowl (Guarded Poly bowl with auto drain, 1/4 PIF)



820025-53KIT

Filter Bowl (Metal with S/Glass & auto drain, 1/4 PIF)



820003-56KIT

Our policy is one of continued research and development. We therefore reserve the right to amend, without notice, the specifications given in this document. (2017 - 9217b) © 2020 Norgren Ltd

Dimensions

Dimensions in mm
Projection/First angle

Automatic Drain

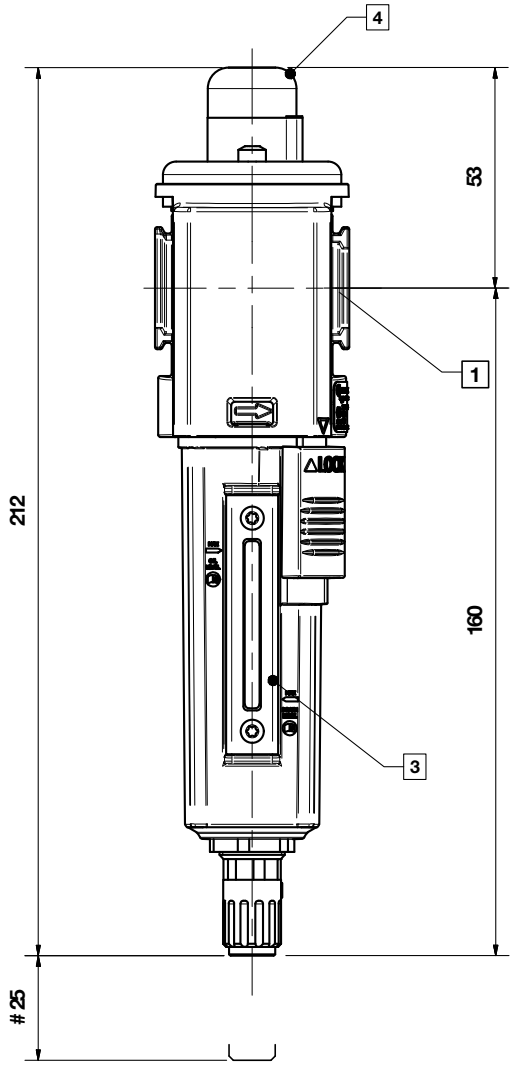

1/4 Turn Manual Drain

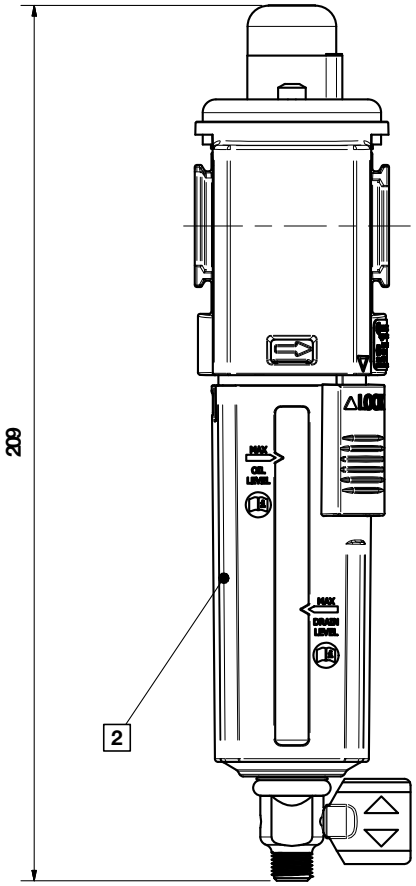

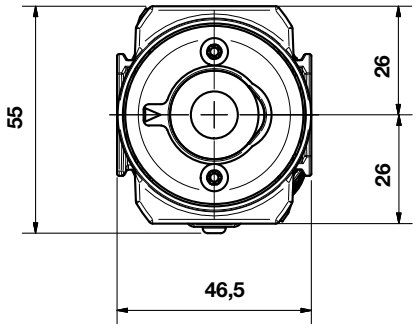

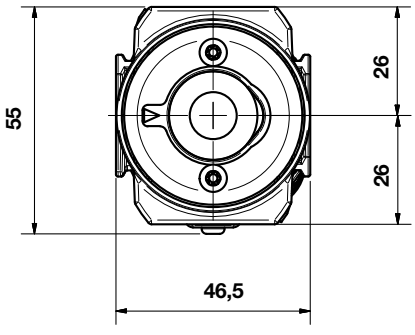

Minimum clearance required to remove bowl
1 Main ports 1/4", 3/8" (ISO G/PTF)
2 Transparent bowl with guard
3 Metal bowl with liquid level indicator lens
4 Service indicator

Our policy is one of continued research and development. We therefore reserve the right to amend, without notice, the specifications given in this document. (2017 - 9217b) © 2020 Norgren Ltd

Accessories

Dimensions in mm
Projection/First angle

Quikclamp with wall bracket

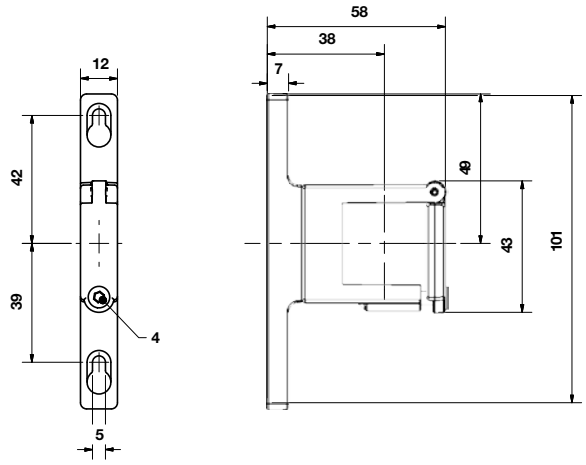

Quikclamp

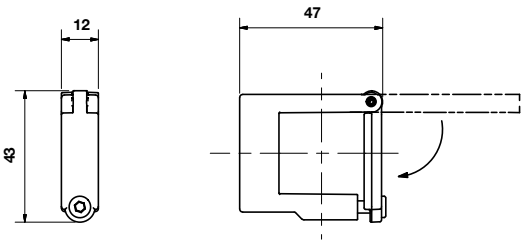

Mounting bracket

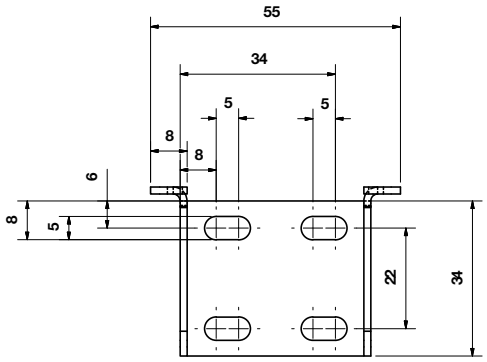

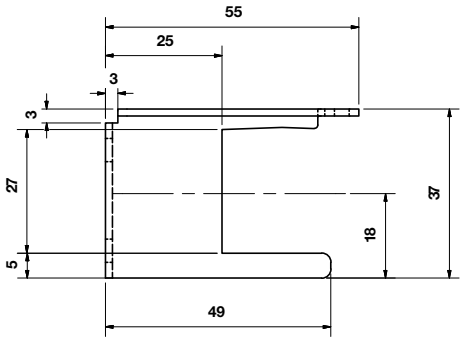

Pressure sensing block

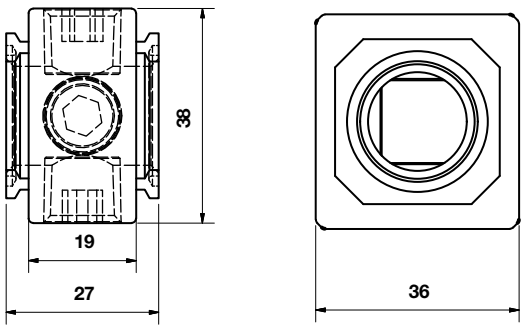

Full flow porting block

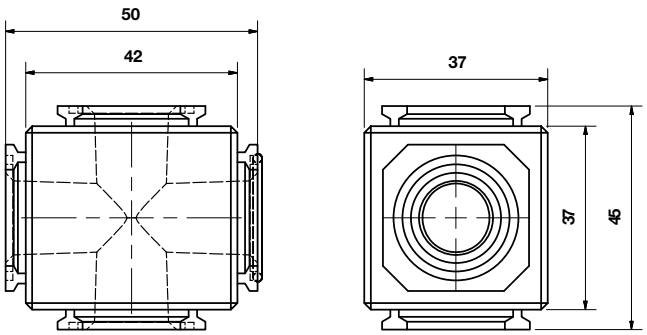

Our policy is one of continued research and development. We therefore reserve the right to amend, without notice, the specifications given in this document. (2017 - 9217b) © 2020 Norgren Ltd

Porting block for 18D pressure switch

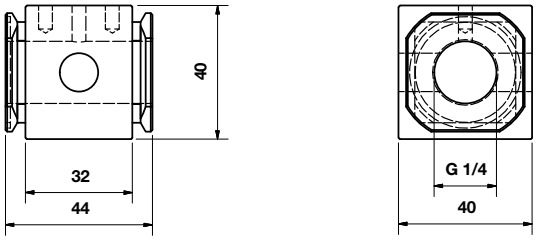

18D Pressure switch

Dimensions in mm
Projection/First angle

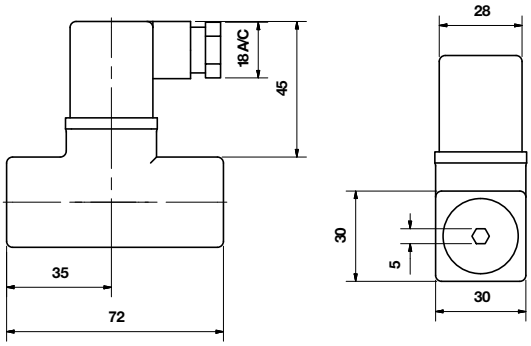

18D Porting block and 18D assembled

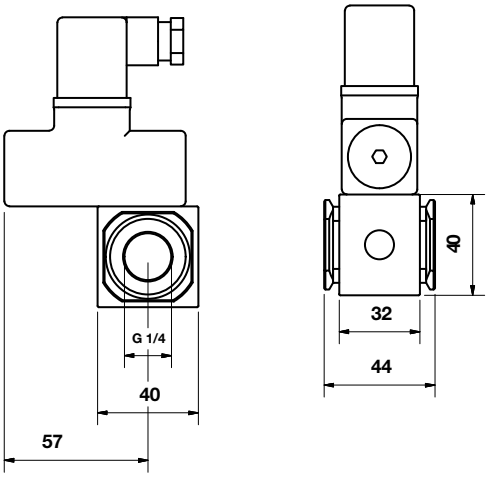

Pipe adaptor

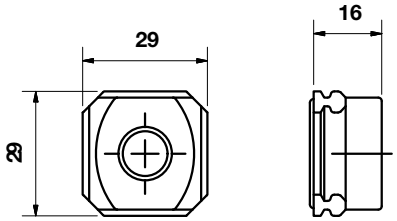

Our policy is one of continued research and development. We therefore reserve the right to amend, without notice, the specifications given in this document. (2017 - 9217b) © 2020 Norgren Ltd

51D Pressure switch - digital

Dimensions in mm
Projection/First angle

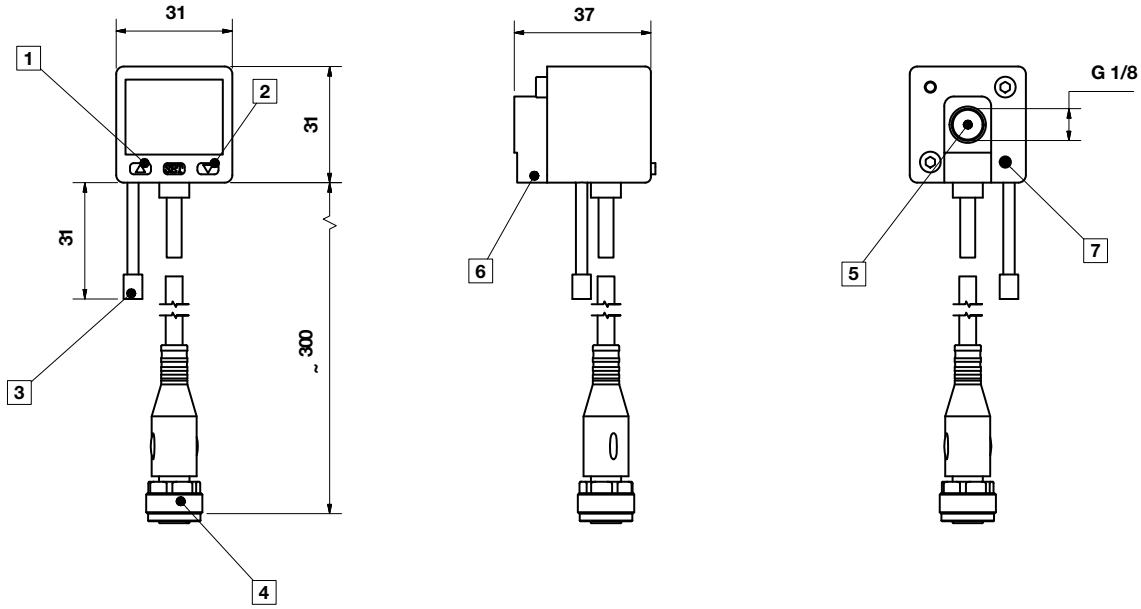

1 Switch OUT 1, green LED
2 Switch OUT 2, red LED
3 Dustproof protector
4 Connector M12 x 1
5 Inlet port
6 Alternative inlet port G1/8 plugged
7 Thread for mounting screw

Warning

These products are intended for use in industrial compressed air systems only. Do not use these products where pressures and temperatures can exceed those listed under **»Technical features/ data«.**

Before using these products with fluids other than those specified, for non-industrial applications, life-support systems or other applications not within published specifications, consult Norgren Ltd.

Through misuse, age, or malfunction, components used in fluid power systems can fail in various modes.

The system designer is warned to consider the failure modes of all component parts used in fluid power systems and to provide adequate safeguards to prevent personal injury or damage to equipment in the event of such failure.

System designers must provide a warning to end users in the system instructional manual if protection against a failure mode cannot be adequately provided.

System designers and end users are cautioned to review specific warnings found in instruction sheets packed and shipped with these products.

Our policy is one of continued research and development. We therefore reserve the right to amend, without notice, the specifications given in this document. (2017 - 9217b) © 2020 Norgren Ltd