LAPP GROUP	**DATA SHEET**	52220000
	SKINTOP® CUBE	valid from: 7.3.2016

The **SKINTOP® CUBE** multi cable bushing system is made up of just a frame (SKINTOP® CUBE FRAME) and flexible clip sealing modules (SKINTOP® CUBE MODULES).
It is able to assemble the SKINTOP® CUBE on 16- and 24-pole connector openings and is used as an entry in an enclosure for converted cables and cords with different diameters.
The system offers strain relief, protection class and protection against vibration. During the removing of the modules remains the frame on the housing.



Technical features:

Protection class	IP64 acc. to EN 60529
Strain relief	Retention acc. to EN 50262
Temperature range	-20 °C up to +80 °C

Approvals:

c UL us

UL File Nr. E349737

Other characteristics:

Good chemical resistance (oil, cleaning agents…)
UV and ozone resistant
Permanent protection against vibration
Frame mountable from in- and outside, fewer parts through huge, variable clamping ranges.

Norm references:

RoHS CE

For more information please see our current catalogue.

SKINTOP® CUBE FRAME



Material:

Frame and down holder	Glass balls reinforced Polyamide, RAL 9005 black
Flat sealing	CR, RAL 9005 black

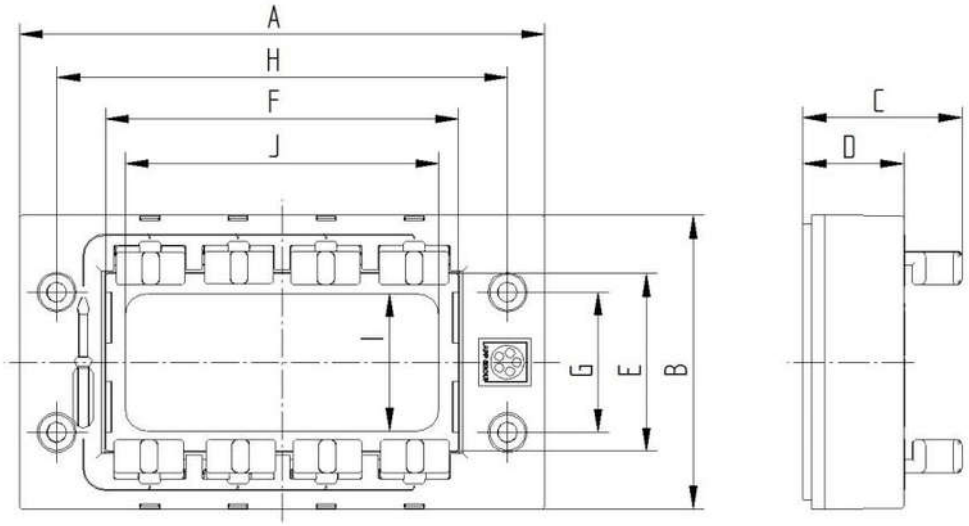

FRAME	A [mm]	B [mm]	C min. [mm]	C max. [mm]	D [mm]	E [mm]	F [mm]	G [mm]	H [mm]	I [mm]	J [mm]	Article No.
16-pole	120	67	37	46	23	40,5	80,7	32	103	31,4	72	52220000
24-pole	145	67	37	46	23	40,5	100,8	32	130	31,4	92	52220001

SKINTOP® CUBE FRAME 16
Panel cut-out for 16-pole connector

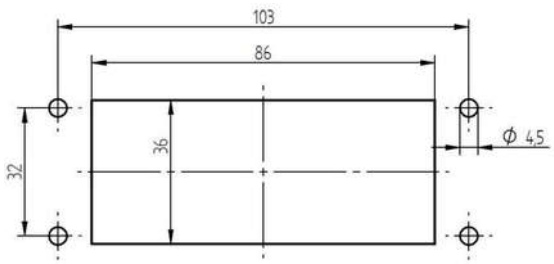

SKINTOP® CUBE FRAME 24
Panel cut-out for 24-pole connector

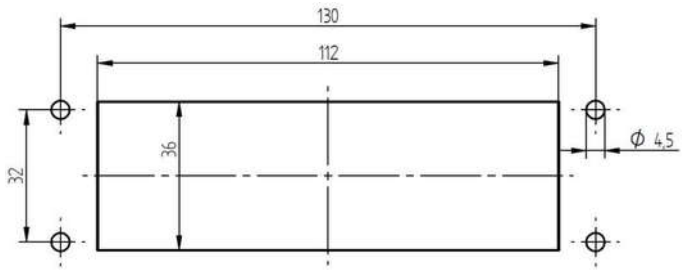

MAST1 / 08.03.2016 / freigegeben

SKINTOP® CUBE MODULE



Material:

Clip module	Special Polypropylene V0, RAL 9005 black
Sealing	LSE2, RAL 9005 black

SKINTOP® CUBE MODULE 20x20 / 40x40

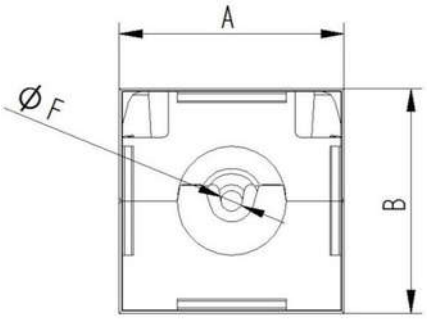

Article number	Article designation	Size A x B [mm]	Clamping range ØF [mm]
52220004	SKINTOP® CUBE MODULE 20x20 BLIND	20 x 20	1 - 3
52220002	SKINTOP® CUBE MODULE 20x20 SMALL	20 x 20	4 - 6
52220003	SKINTOP® CUBE MODULE 20x20 LARGE	20 x 20	6 - 9
52220005	SKINTOP® CUBE MODULE 40x40 SMALL	40 x 40	9 - 12
52220006	SKINTOP® CUBE MODULE 40x40 LARGE	40 x 40	12 - 16
52220007	SKINTOP® CUBE MODULE 40x40 BLIND	40 x 40	

SKINTOP® CUBE MODULE ASI BUS

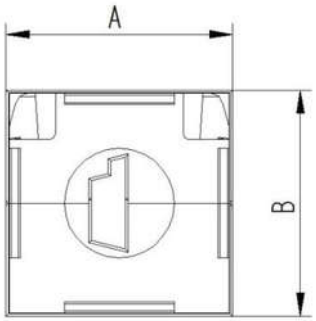

Article number	Article designation	Size A x B [mm]	Clamping range ØF [mm]
52220040	SKINTOP® CUBE MODULE 20x20 ASI BUS	20 x 20	ASI BUS

MAST1 / 08.03.2016 / freigegeben