EXPLOSION-PROOF ENCLOSURE HEATER

CREx 020 | 50 W to 250 W (T3)



- > For areas with explosion and firedamp hazard
- > Large convection surface
- > Clip and screw flange fixing
- > Ready-to-use with strain relief
- > Maintenance free
- > Temperature class T3

Compact convection heater of temperature class T3 (Surface temperature 200 °C max.) for the prevention of formation of condensation, temperature fluctuations, and for protection against frost within control and switch cabinets, as well as measuring equipment located in areas with explosion hazard, underground mines or mines susceptible to firedamp.

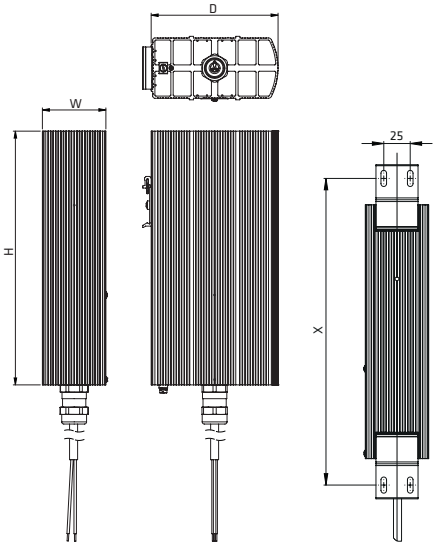

CREx 020 with clip fixing

CREx 020 with screw flange fixing

TECHNICAL DATA

Ex Protection type Ⓔx II 2 GD	
Gases	Ex db IIC T3 Gb
Dusts	Ex tb IIIC T200°C Db IP66
Mine applications	I M2 Ex db I Mb
Surface temperature	< +200 °C (+392 °F)
Heating element	high performance cartridge
Heating body	aluminium profile, silver anodised
Connection	1 m silicone cable (halogen-free) 3 x 0.75 mm²
Connection PE	0.75 to 2.5 mm²
Mounting	clip for 35 mm DIN rail, EN 60715 for heating body sizes 80 x 48 mm and 120 x 60 mm and screw fixing with 2 plug-on flanges for all heating body sizes, optional widthwise mounting
Fitting position	vertical airflow (connection on bottom)
Operating/Storage temperature	-60 to +85 °C (-76 to +185 °F)
Operating/Storage humidity	< 90 % RH (non-condensing)
Protection type/Protection class	IP66 / I (earthed)
Approvals	EPS 16 ATEX 1 109 X IECEx EPS 16.0048X IN METRO DNV 18.0010 X EAC TC RU C-FR.ГБ08.В.02639

Art. No.	Hole spacing for screw flange fixing	Operating voltage	Heating capacity	Rec. pre-fuse T (time-delayed)	Dimensions (D x W x H)	Weight (approx.)
02031.0-00	150 mm	AC 230 V	50 W	0.5 A	80 x 48 x 110 mm	0.7 kg
02032.0-00	225 mm	AC 230 V	100 W	1.0 A	80 x 48 x 180 mm	1.0 kg
02033.0-00	225 mm	AC 230 V	150 W	1.5 A	120 x 60 x 180 mm	1.4 kg
02034.0-00	300 mm	AC 230 V	200 W	2.0 A	120 x 60 x 240 mm	1.7 kg
02035.0-10[1]	275 mm	AC 230 V	250 W	2.5 A	160 x 80 x 220 mm	2.3 kg
02031.9-00	150 mm	AC 120 V	50 W	1.0 A	80 x 48 x 110 mm	0.7 kg
02032.9-00	225 mm	AC 120 V	100 W	2.0 A	80 x 48 x 180 mm	1.0 kg
02033.9-00	225 mm	AC 120 V	150 W	3.0 A	120 x 60 x 180 mm	1.4 kg
02034.9-00	300 mm	AC 120 V	200 W	4.0 A	120 x 60 x 240 mm	1.7 kg
02035.9-10[1]	275 mm	AC 120 V	250 W	5.0 A	160 x 80 x 220 mm	2.3 kg

[1] only screw flange fixing

www.stego-group.com | www.stego.co.uk | www.stegonorden.se

18.10.2022 | Specifications are subject to change without notice. Errors and omissions excepted. Suitability of this product for its intended use and any associated risks must be determined by the end customer/buyer in its final application.