GATES INDUSTRIAL FLUID POWER

ADAPTOR CATALOGUE

CATALOG NO.	50155
EDITION	2024
SUPERSEDES	50155 (2012)



DRIVEN BY POSSIBILITY™

GATES ONE-STOP-SHOP FOR:

- HYDRAULIC HOSES
- HOSE COUPLINGS
- HOSE ASSEMBLIES
- GUARDS AND SLEEVING
- ADAPTORS
- TUBE FITTING SYSTEMS
- SELF-ASSEMBLY MACHINERY
- OILFIELD PRODUCTS
- INDUSTRIAL HOSES
- ENGINEERING & SERVICES
- DIAGNOSTIC TOOLS

FIND ALL AVAILABLE CATALOGUES ON GATES.COM

TABLE OF CONTENTS

INTRODUCTION

HOW TO ORDER

ADAPTOR NOMENCLATURE 2
EXPLANATION OF ORDERING EXAMPLES ... 3
TERMINATION OVERVIEW 3

ABOUT GATES

THE MISSING LINK IN THE HYDRAULIC CIRCUIT

YOUR TOTAL FLUID POWER SOLUTION 6

THE GATES ADAPTOR PROGRAMME SUPPORTING TRUSTWORTHY SOLUTIONS FROM PORT TO PORT

TRUSTWORTHY SOLUTIONS FROM PORT TO PORT 7

PROTECT YOUR INVESTMENT

CORROSION PROTECTION 8

STAY CONNECTED WITH GATES QUICK-LOK

ERGONOMIC ADVANTAGE AND INCREASED EFFICIENCY 10
A PROVEN TRACK RECORD 11

ADAPTOR PROGRAMME

ADAPTOR SELECTION TABLE

BSP ADAPTORS 14
JIC ADAPTORS 15
ORFS ADAPTORS 18
PRESSURE WASH ADAPTORS 19
QUICK-LOK ADAPTORS 19

BSP ADAPTORS

BSP ADAPTORS

BSP MBSPP-MBSPT 22
BSP MBSPP-MBSPP EQUAL 23
BSP MBSPP-MBSPP UNEQUAL 24
BSP MBSPP-MBSPP90BL 25
BSP MBSPP-MBSPPBKHD 25
BSP MBSPP-MBSPPACOR45 26
BSP MBSPP-MBSPPACOR90 26
BSP MBSPP-MBSPPWD 27
BSP MBSPP-MJIS (BSP) 28
BSP MBSPP-MP 28
BSP MBSPP-MB 29
BSP MBSPP-MM 30
BSP MBSPP-FBSPPX 31
BSP MBSPP-FBSPPX45BL 32
BSP MBSPP-FBSPPX90BL 33
BSP MBSPP-FBSPPX90SWT 33
BSP FBSPP-MBSPP 34
BSP FBSPP-MBSPPWD 35
BSP FBSPP-FBSPP 36
BSP FBSPPX-FBSPPX 37
BSP FBSPPX-FBSPPX90BL 38
BSP FBSPPX-FBSPPX90SWT 38
BSP MBSPP-MBSPP-MBSPP 39
BSP MBSPP-MBSPP-FBSPPX 39
BSP MBSPP-FBSPPX-MBSPP 40
BSP MBSPP-FBSPPX-FBSPPX 40
BSP FBSPPX-FBSPPX-MBSPP 41
BSP FBSPPX-FBSPPX-FBSPPX 41
BSP MBSPT-PLUG 42
BSP MBSPP-PLUG 42
BSP FBSPPX-CAP 43
BSP LOCKNUT 43

JIC ADAPTORS

JIC ADAPTORS

JIC MJ-MJ 46
JIC MJ-MJ90 47
JIC MJ-MJBKHD 47
JIC MJ-MJBKHD45 48
JIC MJ-MJBKHD90 49
JIC MJ-MBSPT 49
JIC MJ-MBSPPCOR 50
JIC MJ-MBSPPACOR45 51
JIC MJ-MBSPPACOR90 52
JIC MJ-MBSPPWD 53
JIC MJ-MP 54
JIC MJ-MP90 55
JIC MJ-MB 56
JIC MJ-MB LONG 57
JIC MJ-MBA45 57
JIC MJ-MBA90 58
JIC MJ-MBA90 LONG 59
JIC MJ-MMOR 59
JIC MJ-MMAOR90 60
JIC MJ-MMCOR 60
JIC MJ-MMACOR90 61
JIC MJ-MMWD 62
JIC MJ-MMWD LONG 63
JIC MJ-FJ FIXED 63
JIC MJ-FJX-W/N 63
JIC MJ-FJX45 64
JIC MJ-FJX45-W/N 64
JIC MJ-FJX90 65
JIC MJ-FJX90-W/N 65
JIC FJX-MJ 66
JIC FJX-MBSPPCOR 67
JIC FJX-MBSPPWD-W/N 67
JIC FJX-FJX90-W/N 68
JIC MJ-MJ-MJ 68
JIC MJ-MJBKHD-MJ 69
JIC MJ-MJ-FJX 69
JIC MJ-MJ-FJX-W/N 70
JIC MJ-FJX-MJ 70
JIC MJ-FJX-MJ-W/N 71
JIC MJ-MJ-MBSPPACOR 71
JIC MJ-MBSPPACOR-MJ 72
JIC MJ-MJ-MBA 72
JIC MJ-MBA-MJ 73
JIC MJ-PLUG 73
JIC FJ-CAP 74
JIC FJ-NUT 74
JIC-LOCKNUT 75
JIC TS METRIC 75
JIC TS IMPERIAL 76

ORFS ADAPTORS

ORFS ADAPTORS

ORFS MFFOR-MFFOR 80
ORFS MFFOR-MFFOR90 81
ORFS MFFOR-MFFORBKHD 81
ORFS MFFOR-MFFORBKHD90 82
ORFS MFFOR-MBSPP 83
ORFS MFFOR-MBSPPCOR 84
ORFS MFFOR-MBSPPACOR90 85
ORFS MFFOR-MBSPPWD 86
ORFS MFFOR-MJ 87
ORFS MFFOR-MB 88
ORFS MFFOR-MBA90 89
ORFS MFFOR-MBA90 LONG 90
ORFS MFFOR-FFORX 91
ORFS MFFOR-FFORX90 92
ORFS MFFOR-FJX 92
ORFS FFORX-MJ 93
ORFS FFORX-MBSPPWD 94
ORFS FFORX-MBA90 95
ORFS FFORX-FFORX 95
ORFS MFFOR-PLUG 96
ORFS FFORX-CAP 96
ORFS FFOR-NUT 97

PRESSURE WASH ADAPTORS

PRESSURE WASH ADAPTORS

MBSPP-MM BRASS 100
MM-MM BRASS 100
FBSPP-MM BRASS 100

QUICK-LOK ADAPTORS

QUICK-LOK ADAPTORS

BSP MBSPP-FQLH 104
BSP MBSPPBKHD-FQLH 104
DIN MMOR-FQLH 105
SAE MB-FQLH 106
SAE MB-FQLL 106

NOTES

HOW TO ORDER

ADAPTOR NOMENCLATURE



*Final part of the tee is on branch

10 M J - 8 M BSPP ACOR - 10 M J

Thread Size

in 1/16 inches
JIC = 10 = 7/8"-14 UNF
BSP = 10 = G 5/8"-14
ORFS = 10 = 1"-14 UNS

Thread type

BSPT = BSP Taper
BSPP = BSP Parallel
FF = Flat Face
J = JIC
B = SAE O-Ring Boss
JIS = JIS
M = Metric
P = NPT

Male / Female

M = Male
F = Female

Port & sealing

X = Swivel
OR = O-Ring*
COR = O-Ring* & Retaining Ring
A = Adjustable
WD = Captive Seal
*Standard O-Ring in NBR

Bend Degree

45 = 45°
90 = 90°
SWT = Swept elbow
BL = Compact elbow
BKHD = bulkhead
-W/N = wire-on-nut

Thread Size

in 1/16 inches
BSP = 08 = G 1/2"-14
JIC = 08 = 3/4"-16 UNF
ORFS = 08 = 13/16"-16 UN

8 M BSPP - 8 F BSPP X 90BL



EXPLANATION OF ORDERING EXAMPLES

ORDERING EXAMPLE 1:	
6MJ-8MBSPPACOR90	
6	= 9/16 - 18 UNF
MJ	= Male JIC
8	= 1/2 - 14
MBSPP	= Male BSP Parallel
A	= Adjustable
COR	= O-Ring & Retaining Ring
90	= 90 Degree Elbow



ORDERING EXAMPLE 2:	
16FFORX-12MBSPPWD	
16	= 1.7/16"-12
FFORX	= Female ORFS Swivel
12	= 3/4"-14
MBSPP	= Male BSP Parallel
WD	= Captive Seal



TERMINATION OVERVIEW

DASH SIZE	BSP	JIC	SAE	NPT	ORFS
2	1/8 - 28			Z 1/8 - 27	
4	1/4 - 19	7/16 - 20	7/16 - 20 UNF	Z 1/4 - 18	9/16 - 18
5		1/2 - 20	1/2 - 20 UNF		
6	3/8 -19	9/16 - 18	9/16 - 18 UNF	Z 3/8 - 18	11/16 - 16
8	1/2 - 14	3/4 - 16	3/4 - 16 UNF	Z 1/2 - 14	13/16 - 16
10	5/8 - 14	7/8 - 14	7/8 - 14 UNF		1 - 14
12	3/4 - 14	1.1/16 - 12	1.1/16 - 12 UN	Z 3/4 - 14	1.3/16 - 12
14		1.3/16 - 12	1.3/16 - 12 UN		
16	1 - 11	1.5/16 - 12	1.5/16 - 12 UN	Z 1 - 11.5	1.7/16 - 12
20	1.1/4 - 11	1.5/8 - 12	1.5/8 - 12 UN	Z 1.1/4 - 11.5	1.11/16 - 12
24	1.1/2 - 11	1.7/8 - 12	1.7/8 - 12 UN	Z 1.1/2 - 11.5	2 - 12
32	2 - 11		2.1/2 - 12 UN	Z 2 - 11.5	





ABOUT GATES

THE MISSING LINK IN THE HYDRAULIC CIRCUIT

WITH THE ADDITION OF THE BSP, JIC & ORFS ADAPTOR RANGE, GATES HAS TAKEN ITS INTEGRATED APPROACH TO THE NEXT LEVEL WHERE HOSES, COUPLINGS, TUBE FITTINGS AND ADAPTORS ARE DESIGNED TOGETHER FOR OPTIMAL PERFORMANCE.

YOUR TOTAL FLUID POWER SOLUTION

The Gates Integrated System Approach offers you complete solutions to your fluid power needs. All our hydraulic products are manufactured to stern tolerances and are specifically designed, tested and validated together. This is why our entire hydraulic product line works together perfectly, ensuring you a leak-free operation. And this is why Gates is the reference in the market



THE GATES ADAPTOR PROGRAMME SUPPORTING TRUSTWORTHY SOLUTIONS FROM PORT TO PORT

WITH GATES' HYDRAULIC ADAPTOR RANGE, WE HAVE EVERYTHING IN PLACE TO BE YOUR PREFERRED ONE-STOP-SHOP.

TRUSTWORTHY SOLUTIONS FROM PORT TO PORT

Gates BSP, JIC & ORFS adaptors complete the hydraulic circuit and from now on, you can rely on trusted Gates quality products to do that job! This versatile and competitively priced product range covers most of the European needs. The programme provides you with a well-balanced stock mix that limits your distribution investment but ensures that you always have the right part at hand for an optimal response time to any breakdown helping you to maximise profit. The adaptors are available in a wide array of sizes and configurations:

- Jump size adaptors – to reduce or expand the existing thread
- Thread conversion adaptors – to change from one port thread to another to allow tube fitting or hose connections to be made
- Hose coupling adaptors – hose to port, hose to hose, etc.

Ready for the future and the next generation of hydraulic connections. Check out the Gates Quick-Lock™ adaptors - available in the most common international termination types - allowing you to easily change from threaded connections to Quick-Lock High couplings (See page 103).

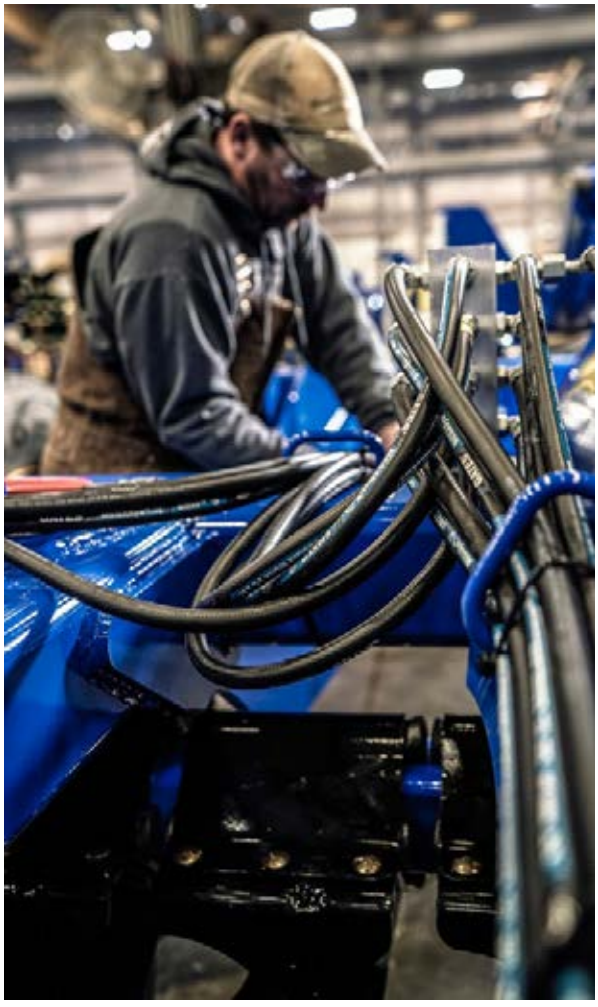

PROTECT YOUR INVESTMENT

GATES ADAPTORS OFFER YOU THE LONGIVITY YOUR APPLICATION NEEDS: 500H PROTECTION AGAINST RED RUST PER ISO 9227 STANDARD.

Especially in environments with high presence of chemicals, fertilizers, rain, mud, high humidity, salts, air pollution, ... the corrosion process is easily accelerated. Most metals are easily oxidized, leading to less robustness of metal componentry of which off-highway vehicles have plenty. Once corrosion starts, it can easily and quickly spread from one component in the hydraulic circuit to another, e.g., from the adaptor to the port or from the adaptor to the hose coupling.

Next to the environmental and direct cost impact of corrosion, meaning replacing the corroded component, there are several indirect costs involved as well. One of the main indirect costs is machine downtime either during preventive maintenance or machine breakdown. The longer it takes, the higher the downtime cost and the higher the chance a project will have to deal with delays and reputational damage. More concerning, however, is the fact that corrosion can lead to safety concerns with loss of life as a worst-case scenario.

Hence, Gates implemented an adaptor plating standard guaranteeing a minimum protection of 168 hours against white rust corrosion and 500 hours against red rust under ISO 9227 test conditions, which is nearly 350% greater than the SAE J516 144-hour standard (ISO 8434 requests 72 hours as a minimum). Above standard plating surfaces equal less downtime, less safety risks and increased product sustainability.

DID YOU KNOW?

The annual worldwide cost of metallic corrosion is estimated to be over a trillion euro, yet with proper corrosion protection a significant percentage of it can be prevented.



500 HOURS
AGAINST RED RUST



STAY CONNECTED WITH GATES QUICK-LOK

With machines becoming more compact and power intensive, designing and manufacturing hydraulic platforms for a worldwide market is a difficult challenge.

That's because environmental controls aimed at preventing hydraulic leaks are becoming more stringent, while manufacturers are demanding greater production line output. With existing threaded technology, meeting all these strict criteria in an efficient way isn't easy. That's where Gates Quick-Lok comes in.

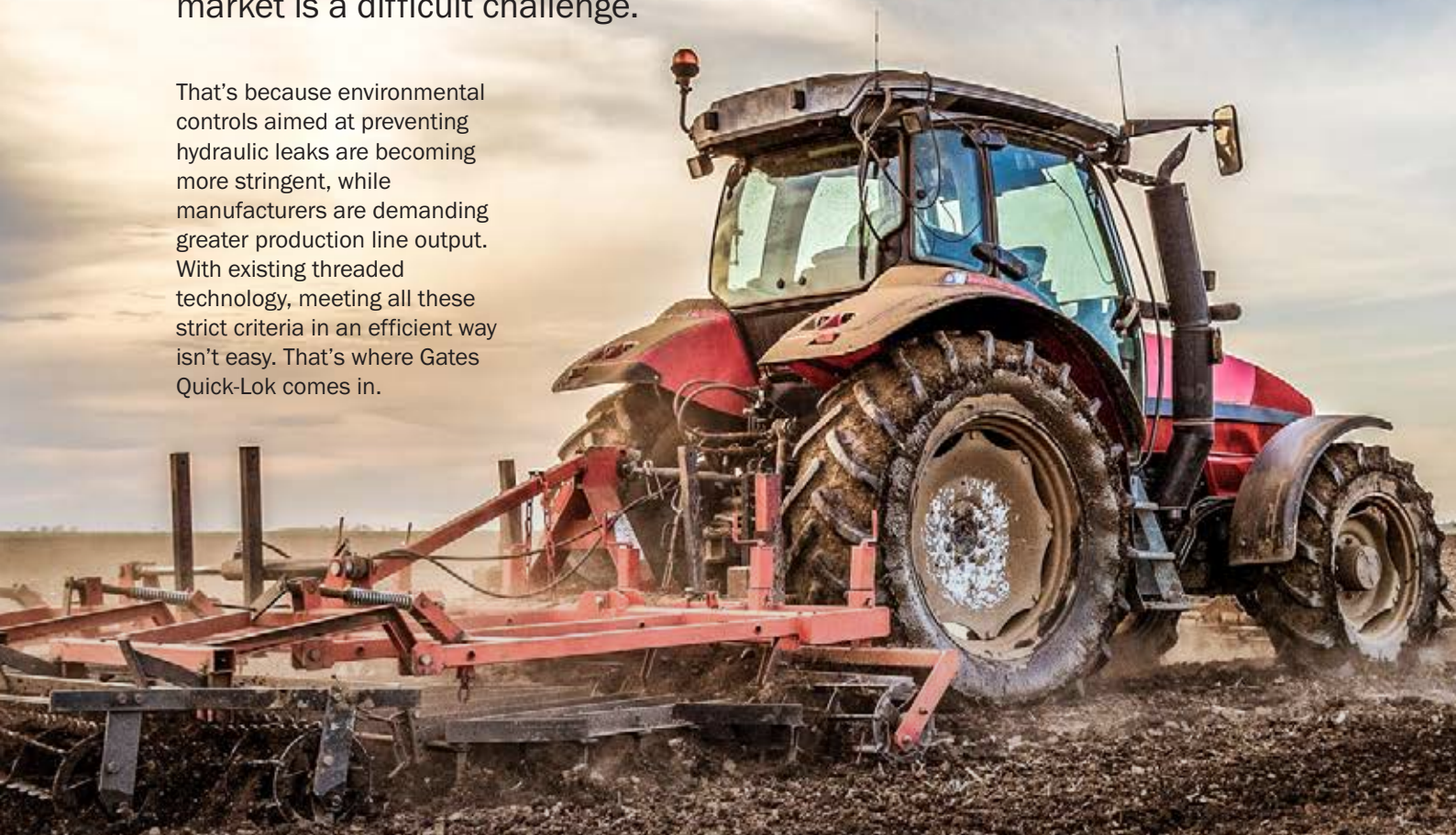

SAVE TIME, LOWER COSTS AND REDUCE THE AMOUNT OF RE-WORK AND NUMBER OF WARRANTY CLAIMS.

ERGONOMIC ADVANTAGE AND INCREASED EFFICIENCY

Quick-Lok couplings are threadless. With threading eliminated, torque settings are not required and both line side connection tooling and installation difficulties are no longer an issue. The easy installation process allows you to use Quick-Lok even in the most confined spaces often found in today's compact machines.

You also benefit from the cost-saving advantages that Quick-Lok delivers; for example, there is no need to invest in a vast range of expensive assembly tools or a skilled assembly labour force.

Plus, any kind of operator-dependent variation in the connection process (which would add re-working time and cost) is completely ruled out. And Quick-Lok couplings are safer and more ergonomic as well.

They simply push into place, reducing tiredness among the work force.

WORK SMARTER, NOT HARDER

- **Faster:** Quicker assembly times lead to improved manufacturing productivity
- **Easier:** With Quick-Lok, couplings click into place to ensure positive engagement every time
- **Smarter:** The connection process is error-proof, providing positive tactile feedback that the connection has been made
- **Simpler:** Verification is simple, and just requires the operator to pull back gently on the hose after connection.

With your assembly and check-up time reduced, your production output is optimised, simply by using the most cost-effective product. In addition, no assembly time is lost because of the need to re-work improperly torqued connections – all of which is good news for your business.

FIELD TESTS HAVE SHOWN THAT QUICK-LOK CONNECTIONS WERE MADE 10X FASTER THAN STANDARD THREADED CONNECTIONS.

A PROVEN TRACK RECORD

We manufacture connections to ensure the highest integrity in port-to-port solutions. How? Quick-Lok connectors are produced from hardened steel and machined to extremely high tolerances. They have undergone rigorous testing under actual and simulated field conditions to confirm their strength and sealing ability. The Quick-Lok coupling family is proven to stand up to impulse loads, side loads, flex conditions, vibration, temperature extremes and vacuum conditions.

TESTED, PROTECTED, SELECTED

- Quick-Lok has been tested to ensure that the push-in force is high enough to provide positive feedback that a connection has been made, but low enough to allow easy assembly on the line
- In terms of corrosion resistance properties, all Quick-Lok couplings and adaptors are protected with our chromium 6 free TuffCoat™ plating, showing a red corrosion resistance of at least 500 hours
- That's why Quick-Lok couplings have been embraced by Original Equipment Manufacturers (OEM) around the world



LOWERING TOTAL COST OF OWNERSHIP

Threadless connectors have developed a reputation as expensive niche products for limited applications.

Gates have changed this with the introduction of Quick-Lok assemblies, which are able to replace threaded couplings in a wide range of applications. Our research has shown that by reducing installation and warranty costs, a Quick-Lok assembly solution can dramatically lower total OEM cost of ownership over a comparable threaded assembly.

FIND OUT MORE ABOUT THE QUICK-LOK RANGE



DRIVEN BY POSSIBILITY™

ADAPTOR PROGRAMME

BSP ADAPTORS

MBSPP

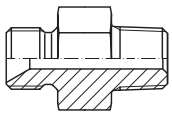

MBSPP-MBSPT
p. 22

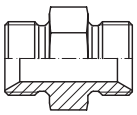

MBSPP-MBSPP EQUAL
p. 23

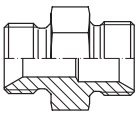

MBSPP-MBSPP UNEQUAL
p. 24

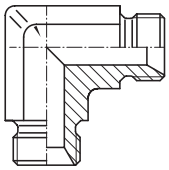

MBSPP-MBSPP90BL
p. 25

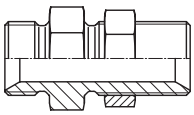

MBSPP-MBSPPBKHD
p. 25

MBSPP

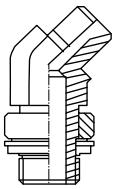

MBSPP-MBSPPAC0R45
p. 26

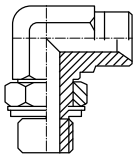

MBSPP-MBSPPAC0R90
p. 26

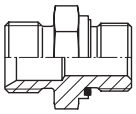

MBSPP-MBSPPWD
p. 27

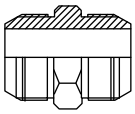

MBSPP-MJIS (BSP)
p. 28

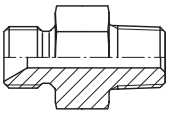

MBSPP-MP
p. 28

MBSPP

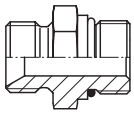

MBSPP-MB
p. 29

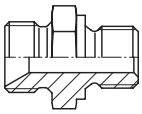

MBSPP-MM
p. 30

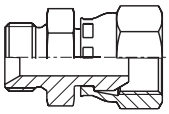

MBSPP-FBSPPX
p. 31

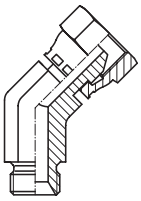

MBSPP-FBSPPX45BL
p. 32

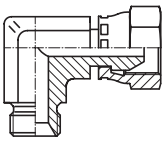

MBSPP-FBSPPX90BL
p. 33

MBSPP

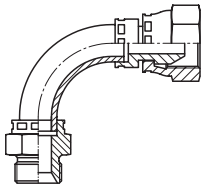

MBSPP-FBSPPX90SWT
p. 33

FBSPP

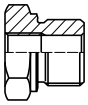

FBSPP-MBSPP
p. 34

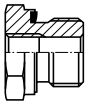

FBSPP-MBSPPWD
p. 35

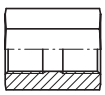

FBSPP-FBSPP
p. 36

FBSPPX



FBSPPX-FBSPPX
p. 37

FBSPPX		MBSPP		
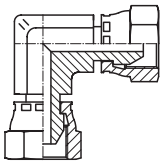	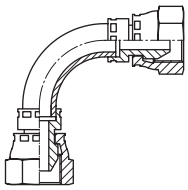	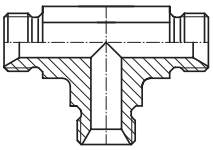	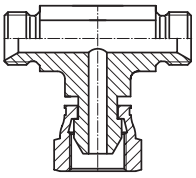	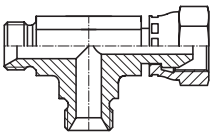
FBSPPX-FBSPPX90BL p. 38	**FBSPPX-FBSPPX90SWT** p. 38	**MBSPP-MBSPP-MBSPP** p. 39	**MBSPP-MBSPP-FBSPPX** p. 39	**MBSPP-FBSPPX-MBSPP** p. 40

MBSPP	FBSPPX		PLUG	
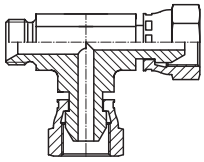	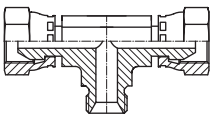	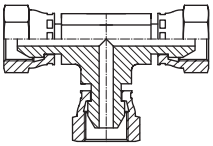	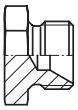	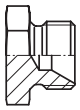
MBSPP-FBSPPX-FBSPPX p. 40	**FBSPPX-FBSPPX-MBSPP** p. 41	**FBSPPX-FBSPPX-FBSPPX** p. 41	**MBSPT-PLUG** p. 42	**MBSPP-PLUG** p. 42

CAP	LOCKNUT
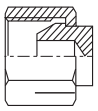	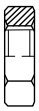
FBSPPX-CAP p. 43	**BSP LOCKNUT** p. 43

JIC ADAPTORS

MJ

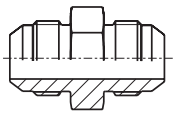	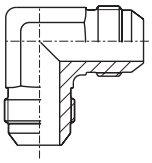	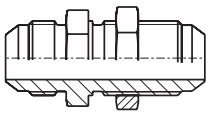	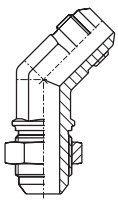	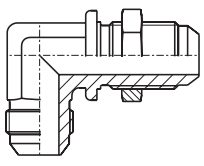
MJ-MJ p. 46	**MJ-MJ90** p. 47	**MJ-MJBKHD** p. 47	**MJ-MJBKHD45** p. 48	**MJ-MJBKHD90** p. 49

MJ

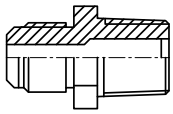

MJ-MBSPT
p. 49

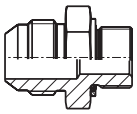

MJ-MBSPPCOR
p. 50

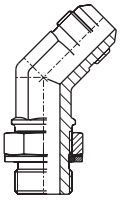

MJ-MBSPPACOR45
p. 51

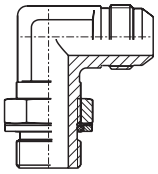

MJ-MBSPPACOR90
p. 52

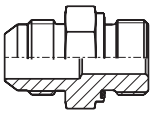

MJ-MBSPPWD
p. 53

MJ

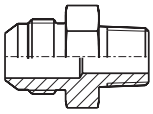

MJ-MP
p. 54

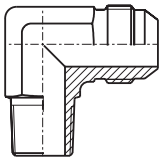

MJ-MP90
p. 55

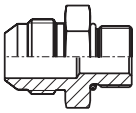

MJ-MB
p. 56

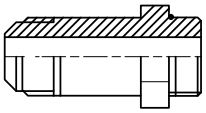

MJ-MB LONG
p. 57

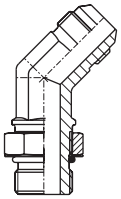

MJ-MBA45
p. 57

MJ

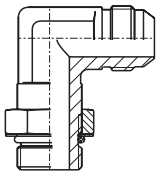

MJ-MBA90
p. 58

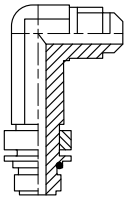

MJ-MBA90 LONG
p. 59

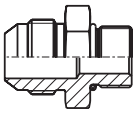

MJ-MMOR
p. 59

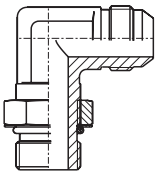

MJ-MMAOR90
p. 60

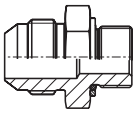

MJ-MMCOR
p. 60

MJ

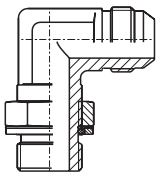

MJ-MMACOR90
p. 61

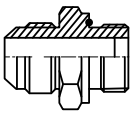

MJ-MMWD
p. 62

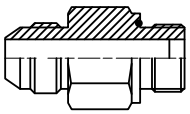

MJ-MMWD LONG
p. 63

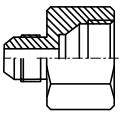

MJ-FJ FIXED
p. 63

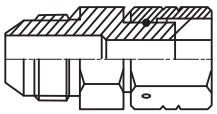

MJ-FJX-W/N
p. 63

MJ				FJX
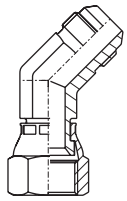	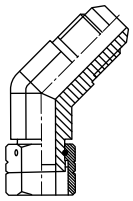	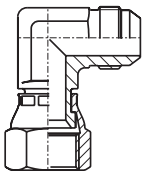	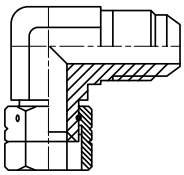	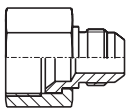
MJ-FJX45 p. 64	**MJ-FJX45-W/N** p. 64	**MJ-FJX90** p. 65	**MJ-FJX90-W/N** p. 65	**FJX-MJ** p. 66

FJX			MJ	
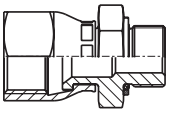	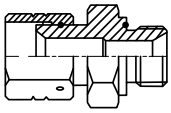	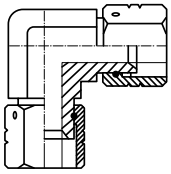	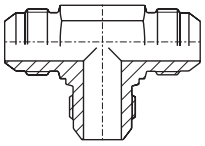	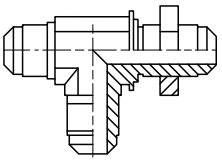
FJX-MBSPPCOR p. 67	**FJX-MBSPPWD-W/N** p. 67	**FJX-FJX90-W/N** p. 68	**MJ-MJ-MJ** p. 68	**MJ-MJBKHD-MJ** p. 69

MJ				
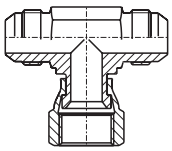	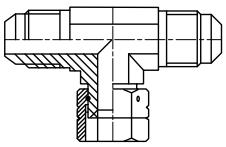	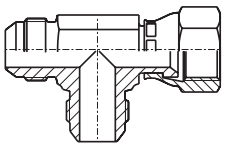	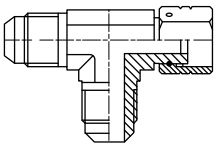	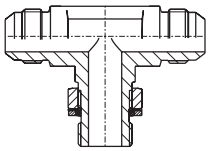
MJ-MJ-FJX p. 69	**MJ-MJ-FJX-W/N** p. 70	**MJ-FJX-MJ** p. 70	**MJ-FJX-MJ-W/N** p. 71	**MJ-MJ-MBSPPACOR** p. 71

MJ			PLUG	CAP
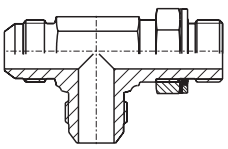	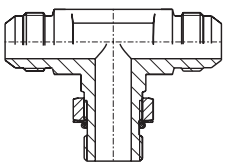	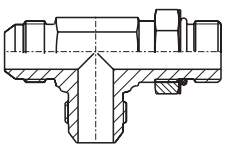	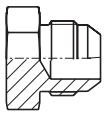	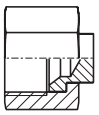
MJ-MBSPPACOR-MJ p. 72	**MJ-MJ-MBA** p. 72	**MJ-MBA-MJ** p. 73	**MJ-PLUG** p. 73	**FJ-CAP** p. 74

NUT	LOCKNUT	SLEEVES	
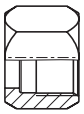	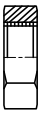	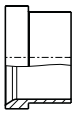	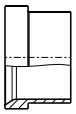
FJ-NUT p. 74	**LOCKNUT** p. 75	**TS METRIC** p. 75	**TS IMPERIAL** p. 76

ORFS ADAPTORS

MFFOR

	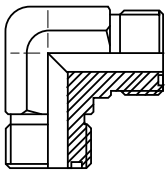	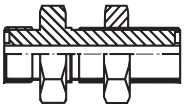	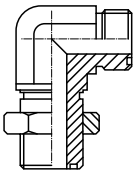	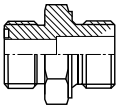
MFFOR-MFFOR p. 80	**MFFOR-MFFOR90** p. 81	**MFFOR-MFFORBKHD** p. 81	**MFFOR-MFFORBKHD90** p. 82	**MFFOR-MBSPP** p. 83

MFFOR

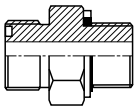	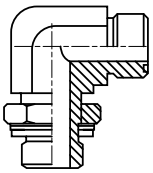	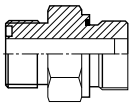	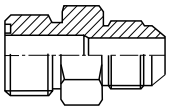	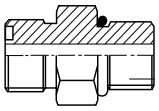
MFFOR-MBSPPCOR p. 84	**MFFOR-MBSPPACOR90** p. 85	**MFFOR-MBSPPWD** p. 86	**MFFOR-MJ** p. 87	**MFFOR-MB** p. 88

MFFOR

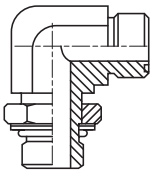	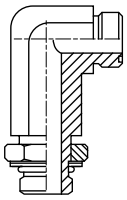	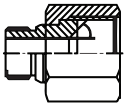	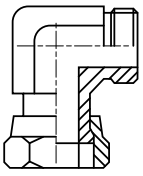	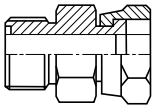
MFFOR-MBA90 p. 89	**MFFOR-MBA90 LONG** p. 90	**MFFOR-FFORX** p. 91	**MFFOR-FFORX90** p. 92	**MFFOR-FJX** p. 92

FFORX				PLUG
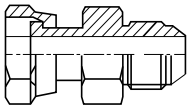	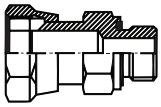	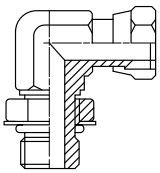	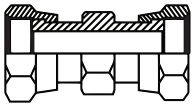	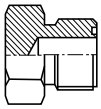
FFORX-MJ p. 93	**FFORX-MBSPPWD** p. 94	**FFORX-MBA90** p. 95	**FFORX-FFORX** p. 95	**MFFOR-PLUG** p. 96

CAP	NUT
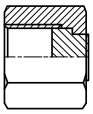	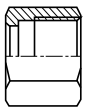
FFORX-CAP p. 96	**FFOR-NUT** p. 97

PRESSURE WASH ADAPTORS

MBSPP	MM	FBSPP
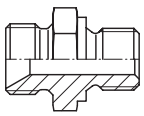	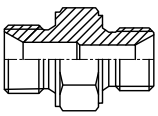	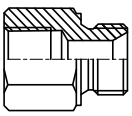
MBSPP-MM BRASS p. 100	**MM-MM BRASS** p. 100	**FBSPP-MM BRASS** p. 100

QUICK-LOK ADAPTORS

MBSPP		MMOR	SAE MB	
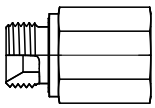	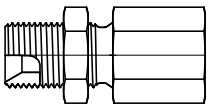	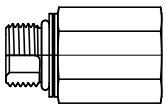	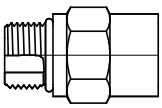	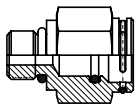
BSP MBSPP-FQLH p. 104	**BSP MBSPPBKHD-FQLH** p. 104	**DIN MMOR-FQLH** p. 105	**SAE MB-FQLH** p. 106	**SAE MB-FQLL** p. 106



DRIVEN BY POSSIBILITY™



BSP ADAPTORS

BSP MBSPP-MBSPT

BSPP 60° male /male BSP taper



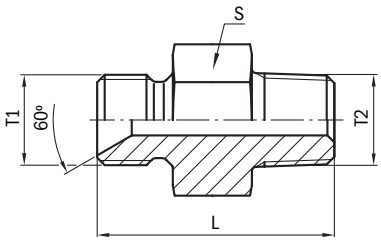

THREAD		LENGTH	HEX/FLATS	WORKING PRESSURE	ADAPTOR
T1	T2	L	S	WP	REF.
BSPP	BSPT	mm	mm	bar	BSP
1/8"-28	1/8"-28	24.0	12.0	345	2MBSPP-2MBSPT
1/8"-28	1/4"-19	30.5	14.0	345	2MBSPP-4MBSPT
1/4"-19	1/8"-28	29.0	14.0	345	4MBSPP-2MBSPT
1/4"-19	1/4"-19	33.0	14.0	345	4MBSPP-4MBSPT
1/4"-19	3/8"-19	33.0	17.0	345	4MBSPP-6MBSPT
1/4"-19	1/2"-14	39.0	22.0	345	4MBSPP-8MBSPT
3/8"-19	1/4"-19	35.0	17.0	345	6MBSPP-4MBSPT
3/8"-19	3/8"-19	35.0	17.0	345	6MBSPP-6MBSPT
3/8"-19	1/2"-14	39.0	22.0	345	6MBSPP-8MBSPT
3/8"-19	3/4"-14	41.0	27.0	275	6MBSPP-12MBSPT
1/2"-14	1/4"-19	37.0	22.0	315	8MBSPP-4MBSPT
1/2"-14	3/8"-19	40.0	22.0	315	8MBSPP-6MBSPT
1/2"-14	1/2"-14	44.0	22.0	315	8MBSPP-8MBSPT
1/2"-14	3/4"-14	44.0	27.0	275	8MBSPP-12MBSPT
3/4"-14	1/2"-14	45.0	27.0	250	12MBSPP-8MBSPT
3/4"-14	3/4"-14	46.0	27.0	250	12MBSPP-12MBSPT
3/4"-14	1"-11	51.0	36.0	205	12MBSPP-16MBSPT
3/4"-1/4	1.1/4"-11	56.0	46.0	170	12MBSPP-20MBSPT
1"-11	3/4"-14	53.0	36.0	200	16MBSPP-12MBSPT
1"-11	1"-11	56.0	36.0	200	16MBSPP-16MBSPT
1"-11	1.1/4"-11	58.0	46.0	170	16MBSPP-20MBSPT
1.1/4"-11	3/4"-14	56.0	50.0	160	20MBSPP-12MBSPT
1.1/4"-11	1"-11	60.0	50.0	160	20MBSPP-16MBSPT
1.1/4"-11	1.1/4"-11	57.0	46.0	160	20MBSPP-20MBSPT
1.1/4"-11	1.1/2"-11	62.0	50.0	105	20MBSPP-24MBSPT
1.1/2"-11	1.1/4"-11	63.0	55.0	125	24MBSPP-20MBSPT
1.1/2"-11	1.1/2"-11	62.0	50.0	105	24MBSPP-24MBSPT
2"-11	2"-11	70.0	65.0	105	32MBSPP-32MBSPT

BSP MBSPP-MBSPP EQUAL

BSPP 60° male / male equal



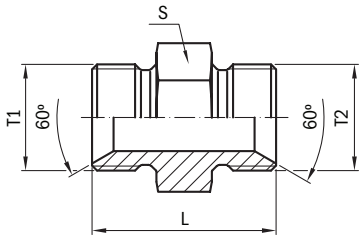

THREAD		LENGTH	HEX/FLATS	WORKING PRESSURE	ADAPTOR
T1	T2	L	S	WP	REF.
BSPP	BSPP	mm	mm	bar	BSP
⅛”-28	⅛”-28	26.5	14.0	350	2MBSPP-2MBSPP
¼”-19	¼”-19	30.0	19.0	350	4MBSPP-4MBSPP
⅜”-19	⅜”-19	35.0	22.0	350	6MBSPP-6MBSPP
½”-14	½”-14	40.0	27.0	315	8MBSPP-8MBSPP
⅝”-14	⅝”-14	43.0	30.0	315	10MBSPP-10MBSPP
¾”-14	¾”-14	45.0	32.0	250	12MBSPP-12MBSPP
1”-11	1”-11	53.0	41.0	200	16MBSPP-16MBSPP
1.¼”-11	1.¼”-11	57.0	50.0	160	20MBSPP-20MBSPP
1.½”-11	1.½”-11	61.0	55.0	125	24MBSPP-24MBSPP
2”-11	2”-11	70.0	70.0	80	32MBSPP-32MBSPP

BSP MBSPP-MBSPP UNEQUAL

BSPP 60° male / male unequal



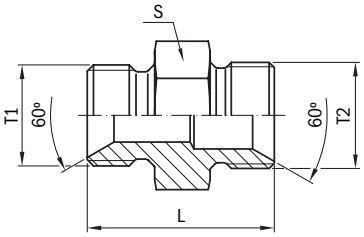

THREAD		LENGTH	HEX/FLATS	WORKING PRESSURE	ADAPTOR
T1	T2	L	S	WP	REF.
BSPP	BSPP	mm	mm	bar	BSP
1/8"-28	1/4"-19	28.0	19.0	350	2MBSPP-4MBSPP
1/8"-28	3/8"-19	32.0	22.0	350	2MBSPP-6MBSPP
1/8"-28	1/2"-14	37.0	27.0	315	2MBSPP-8MBSPP
1/4"-19	3/8"-19	34.0	22.0	350	4MBSPP-6MBSPP
1/4"-19	1/2"-14	37.0	27.0	315	4MBSPP-8MBSPP
1/4"-19	5/8"-14	39.0	30.0	315	4MBSPP-10MBSPP
1/4"-19	3/4"-14	41.0	32.0	250	4MBSPP-12MBSPP
1/4"-19	1"-11	45.0	41.0	200	4MBSPP-16MBSPP
3/8"-19	1/2"-14	40.0	27.0	315	6MBSPP-8MBSPP
3/8"-19	5/8"-14	40.0	30.0	315	6MBSPP-10MBSPP
3/8"-19	3/4"-14	41.0	32.0	250	6MBSPP-12MBSPP
3/8"-19	1"-11	46.0	41.0	200	6MBSPP-16MBSPP
1/2"-14	5/8"-14	42.0	30.0	315	8MBSPP-10MBSPP
1/2"-14	3/4"-14	45.0	32.0	250	8MBSPP-12MBSPP
1/2"-14	1"-11	48.0	41.0	200	8MBSPP-16MBSPP
1/2"-14	1.1/4"-11	53.0	50.0	160	8MBSPP-20MBSPP
5/8"-14	3/4"-14	43.0	32.0	250	10MBSPP-12MBSPP
5/8"-14	1"-11	50.0	41.0	200	10MBSPP-16MBSPP
3/4"-14	1"-11	50.0	41.0	200	12MBSPP-16MBSPP
3/4"-14	1.1/4"-11	53.0	50.0	160	12MBSPP-20MBSPP
1"-11	1.1/4"-11	57.0	50.0	160	16MBSPP-20MBSPP
1"-11	1.1/2"-11	56.0	55.0	125	16MBSPP-24MBSPP
1"-11	2"-11	60.0	70.0	80	16MBSPP-32MBSPP
1.1/4"-11	1.1/2"-11	60.0	55.0	125	20MBSPP-24MBSPP
1.1/4"-11	2"-11	65.0	70.0	80	20MBSPP-32MBSPP
1.1/2"-11	2"-11	67.0	70.0	80	24MBSPP-32MBSPP

BSP MBSPP-MBSPP90BL

BSPP 60° male / male 90° compact elbow



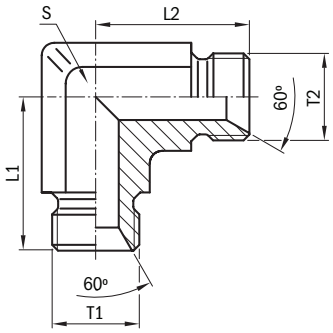

THREAD		LENGTH		HEX/FLATS	WORKING PRESSURE	ADAPTOR
T1	T2	L1	L2	S	WP	REF.
BSPP	BSPP	mm	mm	mm	bar	BSP
¼"-19	¼"-19	27.0	27.0	14.0	350	4MBSPP-4MBSPP90BL
⅜"-19	⅜"-19	29.0	29.0	19.0	350	6MBSPP-6MBSPP90BL
½"-14	½"-14	34.0	34.0	22.0	315	8MBSPP-8MBSPP90BL
¾"-14	¾"-14	43.0	43.0	27.0	250	12MBSPP-12MBSPP90BL
1"-11	1"-11	48.0	48.0	33.0	200	16MBSPP-16MBSPP90BL

BSP MBSPP-MBSPPBKHD

BSPP 60° male / male straight bulkhead with lock nut



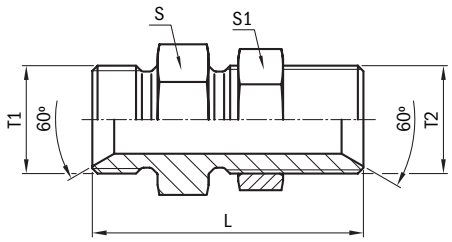

THREAD		LENGTH	HEX/FLATS		WORKING PRESSURE	ADAPTOR
T1	T2	L	S	S1	WP	REF.
BSPP	BSPP	mm	mm	mm	bar	BSP
⅛"-28	⅛"-28	41.5	14.0	14.0	350	2MBSPP-2MBSPPBKHD
¼"-19	¼"-19	46.0	19.0	19.0	350	4MBSPP-4MBSPPBKHD
⅜"-19	⅜"-19	52.0	22.0	22.0	350	6MBSPP-6MBSPPBKHD
½"-14	½"-14	59.0	27.0	27.0	315	8MBSPP-8MBSPPBKHD
⅝"-14	⅝"-14	63.0	30.0	30.0	315	10MBSPP-10MBSPPBKHD
¾"-14	¾"-14	66.0	32.0	32.0	250	12MBSPP-12MBSPPBKHD
1"-11	1"-11	75.0	41.0	41.0	200	16MBSPP-16MBSPPBKHD
1.¼"-11	1.¼"-11	83.0	50.0	50.0	160	20MBSPP-20MBSPPBKHD
1.½"-11	1.½"-11	93.0	55.0	55.0	125	24MBSPP-24MBSPPBKHD
2"-11	2"-11	100.0	70.0	70.0	125	32MBSPP-32MBSPPBKHD

BSP MBSPP-MBSPPACOR45

BSPP 60° male / adjustable male BSPP 45° elbow with O-Ring and retaining ring



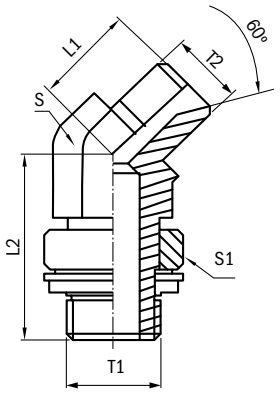

THREAD		LENGTH		HEX/FLATS		WORKING PRESSURE	ADAPTOR
T1	T2	L1	L2	S	S1	WP	REF.
BSPP	BSPP	mm	mm	mm	mm	bar	BSP
3/8"-19	3/8"-19	21.0	33.0	19.0	22.0	200	6MBSPP-6MBSPPACOR45
1/2"-14	1/2"-14	24.3	38.6	22.0	27.0	200	8MBSPP-8MBSPPACOR45

BSP MBSPP-MBSPPACOR90

BSPP 60° male / adjustable male BSPP 90° elbow with O-Ring and retaining ring



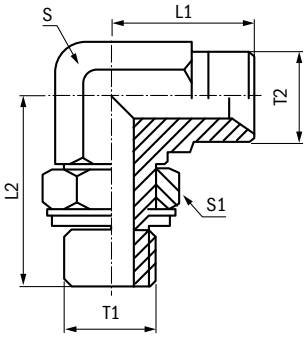

THREAD		LENGTH		HEX/FLATS		WORKING PRESSURE	ADAPTOR
T1	T2	L1	L2	S	S1	WP	REF.
BSPP	BSPP	mm	mm	mm	mm	bar	BSP
1/8"-28	1/8"-28	22.5	26.0	11.0	14.0	200	2MBSPP-2MBSPPACOR90
1/4"-19	1/4"-19	27.0	31.5	14.0	19.0	200	4MBSPP-4MBSPPACOR90
3/8"-19	3/8"-19	29.0	37.0	19.0	22.0	200	6MBSPP-6MBSPPACOR90
3/8"-19	1/2"-14	32.0	43.0	22.0	27.0	200	6MBSPP-8MBSPPACOR90
1/2"-14	1/2"-14	34.0	43.0	22.0	27.0	200	8MBSPP-8MBSPPACOR90

BSP MBSPP-MBSPPWD

BSPP 60° male / male with captive seal



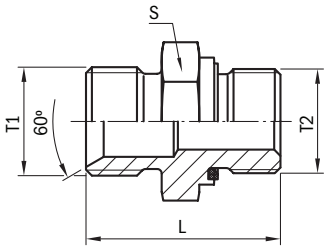

THREAD		LENGTH	HEX/FLATS	WORKING PRESSURE	ADAPTOR
T1	T2	L	S	WP	REF.
BSPP	BSPP	mm	mm	bar	BSP
1/8"-28	1/8"-28	25.5	14.0	350	2MBSPP-2MBSPPWD
1/8"-28	1/4"-19	30.0	19.0	350	2MBSPP-4MBSPPWD
1/4"-19	1/8"-28	37.5	19.0	350	4MBSPP-2MBSPPWD
1/4"-19	1/4"-19	32.0	19.0	350	4MBSPP-4MBSPPWD
1/4"-19	3/8"-19	34.0	22.0	350	4MBSPP-6MBSPPWD
1/4"-19	1/2"-14	39.0	27.0	350	4MBSPP-8MBSPPWD
1/4"-19	3/4"-14	40.0	32.0	350	4MBSPP-12MBSPPWD
3/8"-19	1/8"-28	30.0	22.0	350	6MBSPP-2MBSPPWD
3/8"-19	1/4"-19	34.5	22.0	350	6MBSPP-4MBSPPWD
3/8"-19	3/8"-19	35.0	22.0	350	6MBSPP-6MBSPPWD
3/8"-19	1/2"-14	37.0	27.0	350	6MBSPP-8MBSPPWD
3/8"-19	3/4"-14	43.5	32.0	350	6MBSPP-12MBSPPWD
3/8"-19	1"-11	47.5	41.0	350	6MBSPP-16MBSPPWD
1/2"-14	1/4"-19	40.0	27.0	315	8MBSPP-4MBSPPWD
1/2"-14	3/8"-19	40.0	27.0	315	8MBSPP-6MBSPPWD
1/2"-14	1/2"-14	42.0	27.0	315	8MBSPP-8MBSPPWD
1/2"-14	3/4"-14	43.0	32.0	315	8MBSPP-12MBSPPWD
1/2"-14	1"-11	49.5	41.0	315	8MBSPP-16MBSPPWD
3/4"-14	1/4"-19	41.5	32.0	250	12MBSPP-4MBSPPWD
3/4"-14	3/8"-19	42.0	32.0	250	12MBSPP-6MBSPPWD
3/4"-14	1/2"-14	44.5	32.0	250	12MBSPP-8MBSPPWD
3/4"-14	3/4"-14	47.0	32.0	250	12MBSPP-12MBSPPWD
3/4"-14	1"-11	52.5	41.0	250	12MBSPP-16MBSPPWD
1"-11	1/2"-14	50.5	41.0	200	16MBSPP-8MBSPPWD
1"-11	3/4"-14	52.5	41.0	200	16MBSPP-12MBSPPWD
1"-11	1"-11	54.5	41.0	200	16MBSPP-16MBSPPWD
1.1/4"-11	3/4"-14	52.5	50.0	160	20MBSPP-12MBSPPWD

BSP MBSPP-MJIS (BSP)

BSPP 60° male / male JIS. BSP thread



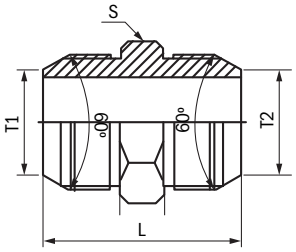

THREAD		LENGTH	HEX/FLATS	WORKING PRESSURE	ADAPTOR
T1	T2	L	S	WP	REF.
BSPP	JIS	mm	mm	bar	BSP
¼"-19	¼"-19	34.0	19.0	345	4MBSPP-4MJIS(BSP)

BSP MBSPP-MP

BSPP 60° male /male NPT



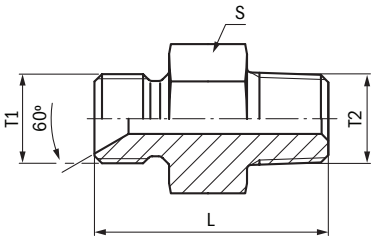

THREAD		LENGTH	HEX/FLATS	WORKING PRESSURE	ADAPTOR
T1	T2	L	S	WP	REF.
BSPP	NPT	mm	mm	bar	BSP
¼"-19	¼"-18	33.0	19.0	275	4MBSPP-4MP
⅜"-19	⅜"-18	37.5	22.0	210	6MBSPP-6MP
½"-14	½"-14	45.5	27.0	210	8MBSPP-8MP
¾"-14	¾"-14	49.0	32.0	170	12MBSPP-12MP
1"-11	1" - 11.5	57.0	41.0	140	16MBSPP-16MP
2"-11	2" - 11.5	68.2	70.0	70	32MBSPP-32MP

BSP MBSPP-MB

BSPP 60° male /male SAE 'O' Ring boss



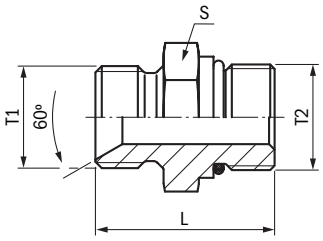

THREAD		LENGTH	HEX/FLATS	WORKING PRESSURE	ADAPTOR
T1	T2	L	S	WP	REF.
BSPP	SAE O	mm	mm	bar	BSP
1/4"-19	7/16" - 20 UNF	29.5	19.0	315	4MBSPP-4MB
1/4"-19	1/2" - 20 UNF	29.2	19.0	315	4MBSPP-5MB
1/4"-19	9/16" - 18 UNF	30.0	19.0	315	4MBSPP-6MB
1/4"-19	3/4" - 16 UNF	32.0	22.0	315	4MBSPP-8MB
3/8"-19	7/16"-20 UNF	32.8	22.0	315	6MBSPP-4MB
3/8"-19	9/16"-18 UNF	33.5	22.0	315	6MBSPP-6MB
3/8"-19	3/4"-16 UNF	33.0	22.0	315	6MBSPP-8MB
3/8"-19	7/8"-14 UNF	36.5	27.0	250	6MBSPP-10MB
3/8"-19	1.1/16"-12 UN	40.0	32.0	250	6MBSPP-12MB
1/2"-14	3/4"-16 UNF	40.0	27.0	315	8MBSPP-8MB
1/2"-14	7/8"-14 UNF	38.7	27.0	250	8MBSPP-10MB
1/2"-14	1.1/16"-12 UN	42.0	32.0	250	8MBSPP-12MB
5/8"-14	7/8"-14 UNF	42.5	30.0	250	10MBSPP-10MB
5/8"-14	1.1/16"-12 UN	43.5	32.0	250	10MBSPP-12MB
3/4"-14	3/4"-16 UNF	43.8	32.0	250	12MBSPP-8MB
3/4"-14	7/8"-14 UNF	43.5	32.0	250	12MBSPP-10MB
3/4"-14	1.1/16"-12 UN	44.5	32.0	250	12MBSPP-12MB
3/4"-14	1.5/16"-12 UN	46.0	41.0	200	12MBSPP-16MB
1"-11	1.1/16"-12 UN	51.0	41.0	200	16MBSPP-12MB
1"-11	1.5/16"-12 UN	46.1	41.0	200	16MBSPP-16MB

BSP MBSPP-MM

BSPP 60° male /male metric



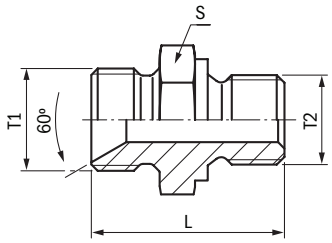

THREAD		LENGTH	HEX/FLATS	WORKING PRESSURE	ADAPTOR
T1	T2	L	S	WP	REF.
BSPP	METRIC	mm	mm	bar	BSP
¼"-19	M10x1	28.5	19.0	350	4MBSPP-10MM
¼"-19	M12x1.5	33.0	19.0	350	4MBSPP-12MM
¼"-19	M14x1.5	33.0	19.0	350	4MBSPP-14MM
¼"-19	M16x1.5	33.5	22.0	350	4MBSPP-16MM
¼"-19	M18x1.5	35.0	24.0	350	4MBSPP-18MM
¼"-19	M20x1.5	37.5	27.0	350	4MBSPP-20MM
¼"-19	M22x1.5	38.0	27.0	350	4MBSPP-22MM
⅜"-19	M12x1.5	34.5	22.0	350	6MBSPP-12MM
⅜"-19	M14x1.5	34.5	22.0	350	6MBSPP-14MM
⅜"-19	M16x1.5	34.5	22.0	350	6MBSPP-16MM
⅜"-19	M18x1.5	36.0	24.0	350	6MBSPP-18MM
⅜"-19	M20x1.5	38.5	27.0	350	6MBSPP-20MM
⅜"-19	M22x1.5	38.5	27.0	350	6MBSPP-22MM
½"-14	M12x1.5	37.0	27.0	315	8MBSPP-12MM
½"-14	M14x1.5	38.0	27.0	315	8MBSPP-14MM
½"-14	M16x1.5	38.0	27.0	315	8MBSPP-16MM
½"-14	M18x1.5	38.5	27.0	315	8MBSPP-18MM
½"-14	M20x1.5	40.5	27.0	315	8MBSPP-20MM
½"-14	M22x1.5	41.0	27.0	315	8MBSPP-22MM
½"-14	M24x1.5	41.0	30.0	315	8MBSPP-24MM
½"-14	M26x1.5	45.0	32.0	315	8MBSPP-26MM
¾"-14	M18x1.5	43.0	32.0	250	12MBSPP-18MM
¾"-14	M22x1.5	42.0	32.0	250	12MBSPP-22MM
¾"-14	M26x1.5	44.0	32.0	250	12MBSPP-26MM
1"-11	M22x1.5	49.0	41.0	200	16MBSPP-22MM
1"-11	M26x1.5	49.0	41.0	200	16MBSPP-26MM

BSP MBSPP-FBSPPX

BSPP 60° male / female swivel



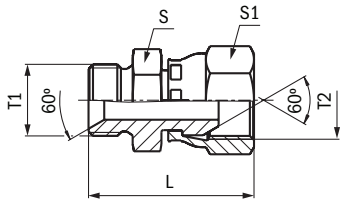

THREAD		LENGTH	HEX/FLATS		WORKING PRESSURE	ADAPTOR
T1	T2	L	S	S1	WP	REF.
BSPP	BSPP F	mm	mm	mm	bar	BSP
⅛"-28	⅛"-28	23.0	14.0	14.0	350	2MBSPP-2FBSPPX
⅛"-28	¼"-19	28.0	14.0	19.0	350	2MBSPP-4FBSPPX
¼"-19	⅛"-28	28.5	19.0	14.0	350	4MBSPP-2FBSPPX
¼"-19	¼"-19	29.5	19.0	19.0	350	4MBSPP-4FBSPPX
¼"-19	⅜"-19	33.0	19.0	22.0	350	4MBSPP-6FBSPPX
¼"-19	½"-14	34.5	22.0	27.0	315	4MBSPP-8FBSPPX
¼"-19	¾"-14	40.0	27.0	32.0	250	4MBSPP-12FBSPPX
⅜"-19	¼"-19	33.0	22.0	19.0	350	6MBSPP-4FBSPPX
⅜"-19	⅜"-19	34.0	22.0	22.0	350	6MBSPP-6FBSPPX
⅜"-19	½"-14	36.0	22.0	27.0	315	6MBSPP-8FBSPPX
⅜"-19	¾"-14	38.5	27.0	32.0	250	6MBSPP-12FBSPPX
⅜"-19	1"-11	41.5	36.0	41.0	200	6MBSPP-16FBSPPX
½"-14	¼"-19	36.5	27.0	19.0	315	8MBSPP-4FBSPPX
½"-14	⅜"-19	37.5	27.0	22.0	315	8MBSPP-6FBSPPX
½"-14	½"-14	39.0	27.0	27.0	315	8MBSPP-8FBSPPX
½"-14	⅝"-14	40.0	27.0	30.0	315	8MBSPP-10FBSPPX
½"-14	¾"-14	43.0	27.0	32.0	250	8MBSPP-12FBSPPX
½"-14	1"-11	43.5	36.0	41.0	200	8MBSPP-16FBSPPX
⅝"-14	⅝"-14	42.0	30.0	30.0	315	10MBSPP-10FBSPPX
¾"-14	⅜"-19	39.0	32.0	22.0	250	12MBSPP-6FBSPPX
¾"-14	½"-14	42.5	32.0	27.0	250	12MBSPP-8FBSPPX
¾"-14	¾"-14	45.0	32.0	32.0	250	12MBSPP-12FBSPPX
¾"-14	1"-11	47.5	36.0	41.0	200	12MBSPP-16FBSPPX
¾"-14	1.¼"-11	51.5	41.0	50.0	160	12MBSPP-20FBSPPX
1"-11	½"-14	47.5	41.0	27.0	200	16MBSPP-8FBSPPX
1"-11	¾"-14	50.0	41.0	32.0	200	16MBSPP-12FBSPPX
1"-11	1"-11	53.5	41.0	41.0	200	16MBSPP-16FBSPPX
1"-11	1.¼"-11	53.5	41.0	50.0	160	16MBSPP-20FBSPPX
1"-11	1.½"-11	56.0	50.0	55.0	125	16MBSPP-24FBSPPX
1.¼"-11	¾"-14	51.0	50.0	32.0	160	20MBSPP-12FBSPPX
1.¼"-11	1"-11	53.0	50.0	41.0	160	20MBSPP-16FBSPPX
1.¼"-11	1.¼"-11	54.5	50.0	50.0	160	20MBSPP-20FBSPPX

BSP MBSPP-FBSPPX

BSPP 60° male / female swivel
CONTINUED



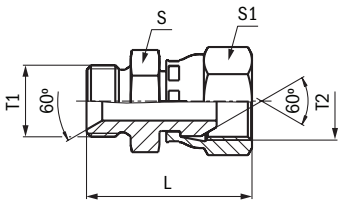

THREAD		LENGTH	HEX/FLATS		WORKING PRESSURE	ADAPTOR
T1	T2	L	S	S1	WP	REF.
BSPP	BSPP F	mm	mm	mm	bar	BSP
1.¼"-11	1.½"-11	55.5	50.0	55.0	125	20MBSPP-24FBSPPX
1.¼"-11	2"-11	59.5	60.0	70.0	80	20MBSPP-32FBSPPX
1.½"-11	1"-11	55.0	55.0	41.0	125	24MBSPP-16FBSPPX
1.½"-11	1.¼"-11	57.5	55.0	50.0	125	24MBSPP-20FBSPPX
1.½"-11	1.½"-11	58.5	55.0	55.0	125	24MBSPP-24FBSPPX
1.½"-11	2"-11	61.5	60.0	70.0	125	24MBSPP-32FBSPPX
2"-11	1.¼"-11	67.0	70.0	50.0	80	32MBSPP-20FBSPPX
2"-11	1.½"-11	68.1	70.0	55.0	125	32MBSPP-24FBSPPX
2"-11	2"-11	69.0	70.0	70.0	125	32MBSPP-32FBSPPX

BSP MBSPP-FBSPPX45BL

BSPP 60° male / female swivel 45°
compact elbow



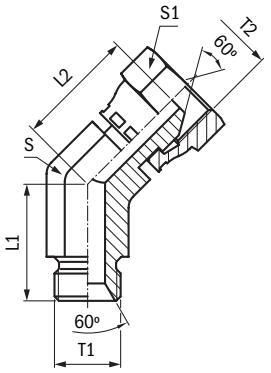

THREAD		LENGTH		HEX/FLATS		WORKING PRESSURE	ADAPTOR
T1	T2	L1	L2	S	S1	WP	REF.
BSPP	BSPP F	mm	mm	mm	mm	bar	BSP
¼"-19	¼"-19	21.0	23.0	14.0	19.0	350	4MBSPP-4FBSPPX45BL
⅜"-19	⅜"-19	25.0	26.0	19.0	22.0	350	6MBSPP-6FBSPPX45BL
½"-14	½"-14	28.0	26.5	22.0	27.0	315	8MBSPP-8FBSPPX45BL
¾"-14	¾"-14	32.0	35.0	27.0	32.0	250	12MBSPP-12FBSPPX45BL
1"-11	1"-11	37.0	37.0	33.0	41.0	200	16MBSPP-16FBSPPX45BL

BSP MBSPP-FBSPPX90BL

BSPP 60° male / female swivel 90° compact elbow



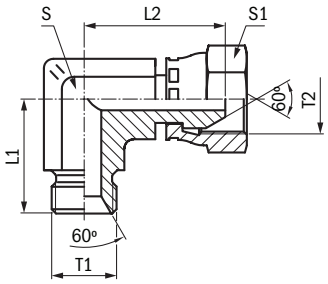

THREAD		LENGTH		HEX/FLATS		WORKING PRESSURE	ADAPTOR
T1	T2	L1	L2	S	S1	WP	REF.
BSPP	BSPP F	mm	mm	mm	mm	bar	BSP
¼"-19	¼"-19	27.0	23.8	14.0	19.0	350	4MBSPP-4FBSPPX90BL
⅜"-19	⅜"-19	29.0	28.2	19.0	22.0	350	6MBSPP-6FBSPPX90BL
½"-14	½"-14	35.0	33.6	22.0	27.0	315	8MBSPP-8FBSPPX90BL
⅝"-14	⅝"-14	37.0	35.0	22.0	30.0	315	10MBSPP-10FBSPPX90BL
¾"-14	¾"-14	43.0	37.9	27.0	32.0	250	12MBSPP-12FBSPPX90BL
1"-11	1"-11	47.0	44.0	33.0	41.0	200	16MBSPP-16FBSPPX90BL
1.¼"-11	1.¼"-11	52.3	50.0	41.0	50.0	160	20MBSPP-20FBSPPX90BL

BSP MBSPP-FBSPPX90SWT

BSPP 60° male / female swivel 90° swept elbow



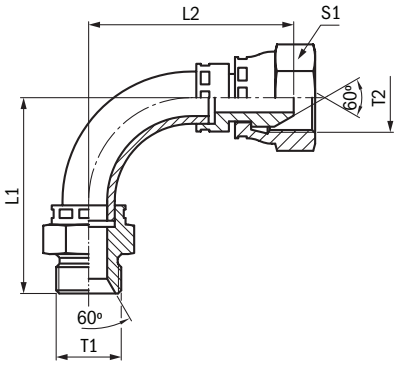

THREAD		LENGTH		HEX/FLATS	WORKING PRESSURE	ADAPTOR
T1	T2	L1	L2	S1	WP	REF.
BSPP	BSPP F	mm	mm	mm	bar	BSP
¼"-19	¼"-19	30.0	32.5	19.0	350	4MBSPP-4FBSPPX90SWT
⅜"-19	⅜"-19	37.0	39.0	22.0	350	6MBSPP-6FBSPPX90SWT
½"-14	½"-14	45.0	47.0	27.0	315	8MBSPP-8FBSPPX90SWT
⅝"-14	⅝"-14	52.0	52.0	30.0	315	10MBSPP-10FBSPPX90SWT
¾"-14	¾"-14	54.0	57.0	32.0	250	12MBSPP-12FBSPPX90SWT
1"-11	1"-11	68.0	69.0	41.0	200	16MBSPP-16FBSPPX90SWT
1.¼"-11	1.¼"-11	100.0	94.0	50.0	160	20MBSPP-20FBSPPX90SWT

BSP FBSPP-MBSPP

BSPP 60° female fixed / male



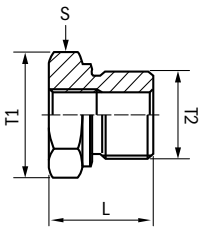

THREAD		LENGTH	HEX/FLATS	WORKING PRESSURE	ADAPTOR
T1	T2	L	S	WP	REF.
BSPP F	BSPP	mm	mm	in PB*	BSP
1/8"-28	1/4"-19	28.0	19.0	630	2FBSPP-4MBSPP
1/8"-28	3/8"-19	22.5	22.0	630	2FBSPP-6MBSSP
1/8"-28	1/2"-14	24.0	27.0	400	2FBSPP-8MBSPP
1/4"-19	1/8"-28	31.0	19.0	630	4FBSPP-2MBSPP
1/4"-19	3/8"-19	36.0	22.0	630	4FBSPP-6MBSPP
1/4"-19	1/2"-14	24.0	27.0	400	4FBSPP-8MBSPP
1/4"-19	3/4"-14	26.0	32.0	400	4FBSPP-12MBSPP
1/4"-19	1"-11	29.0	41.0	400	4FBSPP-16MBSPP
3/8"-19	1/8"-28	32.0	24.0	630	6FBSPP-2MBSPP
3/8"-19	1/4"-19	36.0	24.0	630	6FBSPP-4MBSPP
3/8"-19	1/2"-14	36.0	27.0	400	6FBSPP-8MBSPP
3/8"-19	3/4"-14	26.0	32.0	400	6FBSPP-12MBSPP
3/8"-19	1"-11	29.0	41.0	400	6FBSPP-16MBSPP
1/2"-14	1/4"-19	40.0	30.0	630	8FBSPP-4MBSPP
1/2"-14	3/8"-19	41.0	30.0	630	8FBSPP-6MBSPP
1/2"-14	3/4"-14	41.0	32.0	400	8FBSPP-12MBSPP
1/2"-14	1"-11	29.0	41.0	400	8FBSPP-16MBSPP
1/2"-14	1.1/4"-11	32.0	50.0	400	8FBSPP-20MBSPP
1/2"-14	1.1/2"-11	36.0	55.0	250	8FBSPP-24MBSPP
3/4"-14	1/4"-19	43.0	36.0	400	12FBSPP-4MBSPP
3/4"-14	3/8"-19	44.0	36.0	400	12FBSPP-6MBSPP
3/4"-14	1/2"-14	46.0	36.0	400	12FBSPP-8MBSPP
3/4"-14	1"-11	47.0	41.0	400	12FBSPP-16MBSPP
3/4"-14	1.1/4"-11	32.0	50.0	250	12FBSPP-20MBSPP
3/4"-14	1.1/2"-11	36.0	55.0	250	12FBSPP-24MBSPP
1"-11	1/2"-14	49.0	41.0	400	16FBSPP-8MBSPP
1"-11	3/4"-14	51.0	41.0	400	16FBSPP-12MBSPP
1"-11	1"-11	52.0	50.0	250	16FBSPP-16MBSPP
1"-11	1.1/2"-11	36.0	55.0	250	16FBSPP-24MBSPP
1.1/4"-11	1/2"-14	53.0	55.0	250	20FBSPP-8MBSPP
1.1/4"-11	3/4"-14	55.0	55.0	250	20FBSPP-12MBSPP
1.1/4"-11	1"-11	57.0	55.0	250	20FBSPP-16MBSPP
1.1/4"-11	1.1/2"-11	58.0	55.0	250	20FBSPP-24MBSPP
1.1/2"-11	3/4"-14	57.0	60.0	250	24FBSPP-12MBSPP
1.1/2"-11	1"-11	59.0	60.0	250	24FBSPP-16MBSPP
1.1/2"-11	1.1/4"-11	60.0	60.0	250	24FBSPP-20MBSPP

*PB is the overpressure of the operating pressure according to DIN EN 764-1. Unless otherwise indicated, the safety factor for PB is 2,5.

BSP FBSPP-MBSPPWD

BSPP 60° female / male with captive seal



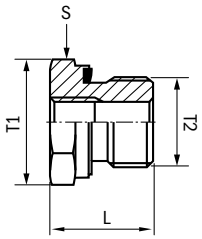

THREAD		LENGTH	HEX/FLATS	WORKING PRESSURE	ADAPTOR
T1	T2	L	S	WP	REF.
BSPP F	BSPP	mm	mm	in PB*	BSP
1/8"-28	1/4"-19	29.0	19.0	630	2FBSPP-4MBSPPWD
1/8"-28	3/8"-19	22.5	22.0	630	2FBSPP-6MBSSPWD
1/8"-28	1/2"-14	24.0	27.0	630	2FBSPP-8MBSPPWD
1/4"-19	1/8"-28	31.0	19.0	630	4FBSPP-2MBSPPWD
1/4"-19	3/8"-19	36.0	22.0	630	4FBSPP-6MBSPPWD
1/4"-19	1/2"-14	24.0	27.0	630	4FBSPP-8MBSPPWD
1/4"-19	3/4"-14	26.0	32.0	400	4FBSPP-12MBSPPWD
1/4"-19	1"-11	29.0	41.0	400	4FBSPP-16MBSPPWD
3/8"-19	1/8"-28	32.0	24.0	630	6FBSPP-2MBSPPWD
3/8"-19	1/4"-19	36.0	24.0	630	6FBSPP-4MBSPPWD
3/8"-19	1/2"-14	37.0	27.0	630	6FBSPP-8MBSPPWD
3/8"-19	3/4"-14	26.0	32.0	400	6FBSPP-12MBSPPWD
3/8"-19	1"-11	29.0	41.0	400	6FBSPP-16MBSPPWD
1/2"-14	1/4"-19	40.0	30.0	630	8FBSPP-4MBSPPWD
1/2"-14	3/8"-19	41.0	30.0	630	8FBSPP-6MBSPPWD
1/2"-14	3/4"-14	43.0	32.0	400	8FBSPP-12MBSPPWD
1/2"-14	1"-11	29.0	41.0	400	8FBSPP-16MBSPPWD
1/2"-14	1.1/4"-11	32.0	50.0	400	8FBSPP-20MBSPPWD
1/2"-14	1.1/2"-11	36.0	55.0	315	8FBSPP-24MBSPPWD
3/4"-14	1/4"-19	43.0	36.0	630	12FBSPP-4MBSPPWD
3/4"-14	3/8"-19	44.0	36.0	400	12FBSPP-6MBSPPWD
3/4"-14	1/2"-14	46.0	36.0	400	12FBSPP-8MBSPPWD
3/4"-14	1"-11	49.0	41.0	400	12FBSPP-16MBSPPWD
3/4"-14	1.1/4"-11	32.0	50.0	400	12FBSPP-20MBSPPWD
3/4"-14	1.1/2"-11	36.0	55.0	315	12FBSPP-24MBSPPWD
1"-11	1/2"-14	49.0	41.0	400	16FBSPP-8MBSPPWD
1"-11	3/4"-14	51.0	41.0	400	16FBSPP-12MBSPPWD
1"-11	1"-11	53.0	50.0	400	16FBSPP-16MBSPPWD
1"-11	1.1/2"-11	36.0	55.0	315	16FBSPP-24MBSPPWD
1.1/4"-11	1/2"-14	53.0	55.0	400	20FBSPP-8MBSPPWD
1.1/4"-11	3/4"-14	55.0	55.0	400	20FBSPP-12MBSPPWD
1.1/4"-11	1"-11	57.0	55.0	400	20FBSPP-16MBSPPWD
1.1/4"-11	1.1/2"-11	58.0	55.0	315	20FBSPP-24MBSPPWD
1.1/2"-11	3/4"-14	57.0	60.0	315	24FBSPP-12MBSPPWD
1.1/2"-11	1"-11	59.0	60.0	315	24FBSPP-16MBSPPWD
1.1/2"-11	1.1/4"-11	60.0	60.0	315	24FBSPP-20MBSPPWD

*PB is the overpressure of the operating pressure according to DIN EN 764-1. Unless otherwise indicated, the safety factor for PB is 2,5.

BSP FBSPP-FBSPP

BSPP female fixed / female fixed



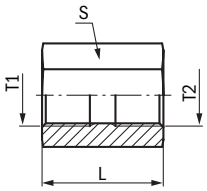

THREAD		LENGTH	HEX/FLATS	WORKING PRESSURE	ADAPTOR
T1	T2	L	S	WP	REF.
BSPP F	BSPP F	mm	mm	bar	BSP
1/8"-28	1/8"-28	22.0	14.0	350	2FBSPP-2FBSPP
1/4"-19	1/4"-19	25.0	19.0	350	4FBSPP-4FBSPP
3/8"-19	3/8"-19	27.0	22.0	350	6FBSPP-6FBSPP
1/2"-14	1/2"-14	35.0	27.0	315	8FBSPP-8FBSPP
5/8"-14	5/8"-14	36.0	30.0	315	10FBSPP-10FBSPP
3/4"-14	3/4"-14	40.0	32.0	250	12FBSPP-12FBSPP
1"-11	1"-11	45.0	41.0	200	16FBSPP-16FBSPP
1.1/4"-11	1.1/4"-11	48.0	50.0	160	20FBSPP-20FBSPP
1.1/2"-11	1.1/2"-11	54.0	55.0	125	24FBSPP-24FBSPP
2"-11	2"-11	60.0	70.0	125	32FBSPP-32FBSPP

BSP FBSPPX-FBSPPX

BSPP 60° female swivel / female swivel



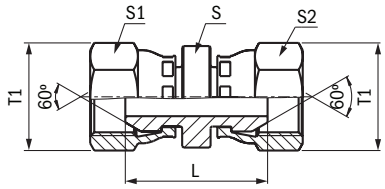

THREAD		LENGTH	HEX/FLATS			WORKING PRESSURE	ADAPTOR
T1	T2	L	S	S1	S2	WP	REF.
BSPP F	BSPP F	mm	mm	mm	mm	bar	BSP
1/8"-28	1/8"-28	24.5	12.0	14.0	14.0	350	2FBSPPX-2FBSPPX
1/4"-19	1/4"-19	29.0	14.0	19.0	19.0	350	4FBSPPX-4FBSPPX
1/4"-19	3/8"-19	31.5	17.0	22.0	19.0	350	4FBSPPX-6FBSPPX
1/4"-19	1/2"-14	33.5	22.0	27.0	19.0	315	4FBSPPX-8FBSPPX
3/8"-19	3/8"-19	32.5	17.0	22.0	22.0	350	6FBSPPX-6FBSPPX
3/8"-19	1/2"-14	34.5	22.0	27.0	22.0	315	6FBSPPX-8FBSPPX
1/2"-14	1/2"-14	38.0	22.0	27.0	27.0	315	8FBSPPX-8FBSPPX
1/2"-14	5/8"-14	39.0	24.0	30.0	27.0	315	8FBSPPX-10FBSPPX
1/2"-14	3/4"-14	41.0	27.0	32.0	27.0	250	8FBSPPX-12FBSPPX
5/8"-14	5/8"-14	39.0	24.0	30.0	30.0	315	10FBSPPX-10FBSPPX
3/4"-14	3/4"-14	43.5	27.0	32.0	32.0	250	12FBSPPX-12FBSPPX
3/4"-14	1"-11	49.0	36.0	41.0	32.0	200	12FBSPPX-16FBSPPX
1"-11	1"-11	50.0	36.0	41.0	41.0	200	16FBSPPX-16FBSPPX
1.1/4"-11	1.1/4"-11	55.0	41.0	50.0	50.0	160	20FBSPPX-20FBSPPX
1.1/2"-11	1.1/2"-11	58.0	50.0	55.0	55.0	125	24FBSPPX-24FBSPPX
2"-11	2"-11	61.5	60.0	70.0	70.0	125	32FBSPPX-32FBSPPX

BSP FBSPPX-FBSPPX90BL

BSPP 60° female swivel / female swivel 90° compact elbow



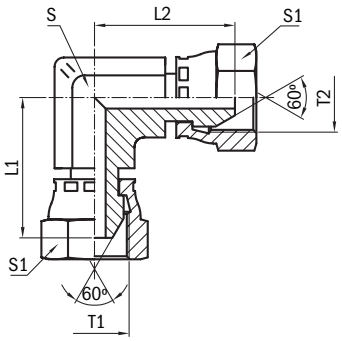

THREAD		LENGTH		HEX/FLATS		WORKING PRESSURE	ADAPTOR
T1	T2	L1	L2	S	S1	WP	REF.
BSPP F	BSPP F	mm	mm	mm	mm	bar	BSP
¼"-19	¼"-19	24.5	24.5	14.0	19.0	350	4FBSPPX-4FBSPPX90BL
⅜"-19	⅜"-19	27.2	27.2	19.0	22.0	350	6FBSPPX-6FBSPPX90BL
½"14	½"14	31.5	31.5	22.0	27.0	315	8FBSPPX-8FBSPPX90BL
⅝"-14	⅝"-14	37.0	37.0	22.0	30.0	315	10FBSPPX-10FBSPPX90BL
¾"-14	¾"-14	37.9	37.9	27.0	32.0	250	12FBSPPX-12FBSPPX90BL
1"-11	1"-11	46.0	46.0	33.0	41.0	200	16FBSPPX-16FBSPPX90BL
1.¼"-11	1.¼"-11	50.0	50.0	41.0	50.0	160	20FBSPPX-20FBSPPX90BL

BSP FBSPPX-FBSPPX90SWT

BSPP 60° female swivel / female swivel 90° swept elbow



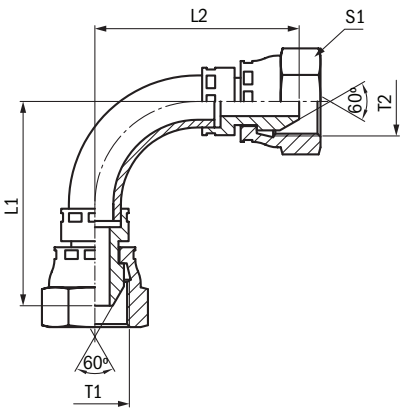

THREAD		LENGTH		HEX/FLATS	WORKING PRESSURE	ADAPTOR
T1	T2	L1	L2	S1	WP	REF.
BSPP F	BSPP F	mm	mm	mm	bar	BSP
¼"-19	¼"-19	30.0	30.0	19.0	350	4FBSPPX-4FBSPPX90SWT
⅜"-19	⅜"-19	36.5	36.5	22.0	350	6FBSPPX-6FBSPPX90SWT
½"-14	½"-14	45.0	45.0	27.0	315	8FBSPPX-8FBSPPX90SWT
⅝"-14	⅝"-14	53.0	53.0	30.0	315	10FBSPPX-10FBSPPX90SWT
¾"-14	¾"-14	58.0	58.0	32.0	250	12FBSPPX-12FBSPPX90SWT
1"-11	1"-11	73.0	73.0	41.0	200	16FBSPPX-16FBSPPX90SWT
1.¼"-11	1.¼"-11	92.0	92.0	50.0	160	20FBSPPX-20FBSPPX90SWT

BSP MBSPP-MBSPP-MBSPP

BSPP 60° male / male / male "T"



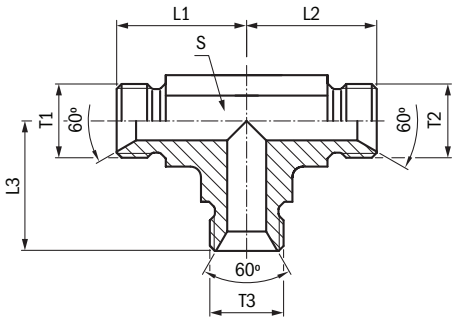

THREAD			LENGTH			HEX/FLATS	WORKING PRESSURE	ADAPTOR
T1	T2	T3	L1	L2	L3	S	WP	REF.
BSPP	BSPP	BSPP	mm	mm	mm	mm	bar	BSP
¼"-19	¼"-19	¼"-19	27.0	27.0	27.0	14.0	350	4MBSPP-4MBSPP-4MBSPP
⅜"-19	⅜"-19	⅜"-19	29.0	29.0	29.0	19.0	350	6MBSPP-6MBSPP-6MBSPP
½"-14	½"-14	½"-14	35.0	35.0	35.0	22.0	315	8MBSPP-8MBSPP-8MBSPP
⅝"-14	⅝"-14	⅝'-14	37.0	37.0	37.0	27.0	315	10MBSPP-10MBSPP-10MBSPP
¾"-14	¾"-14	¾"-14	43.0	43.0	43.0	27.0	250	12MBSPP-12MBSPP-12MBSPP
1"-11	1"-11	1"-11	48.0	48.0	48.0	33.0	200	16MBSPP-16MBSPP-16MBSPP
1.¼"-11	1.¼"-11	1.¼"-11	51.0	51.0	51.0	41.0	160	20MBSPP-20MBSPP-20MBSPP
1.½"-11	1.½"-11	1.½"-11	60.5	60.5	60.5	48.0	125	24MBSPP-24MBSPP-24MBSPP

BSP MBSPP-MBSPP-FBSPPX

BSPP 60° male / male / female swivel "T"



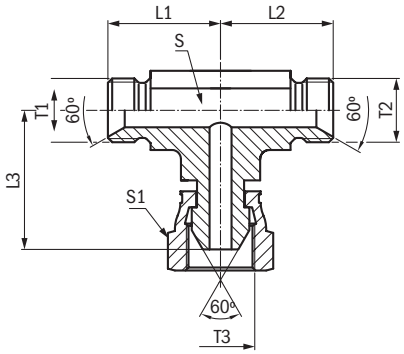

THREAD			LENGTH			HEX/FLATS		WORKING PRESSURE	ADAPTOR
T1	T2	T3	L1	L2	L3	S	S 1	WP	REF.
BSPP	BSPP	BSPP F	mm	mm	mm	mm	mm	bar	BSP
¼"-19	¼"-19	¼"-19	27.0	27.0	23.8	14.0	19.0	350	4MBSPP-4MBSPP-4FBSPPX
⅜"-19	⅜"-19	⅜"-19	29.0	29.0	28.2	19.0	22.0	350	6MBSPP-6MBSPP-6FBSPPX
½"-14	½"-14	½"-14	35.0	35.0	33.6	22.0	27.0	315	8MBSPP-8MBSPP-8FBSPPX
¾"-14	¾"-14	¾"-14	43.0	43.0	37.9	27.0	32.0	250	12MBSPP-12MBSPP-12FBSPPX
1"-11	1"-11	1"-11	47.0	47.0	45. 4	33.0	41.0	200	16MBSPP-16MBSPP-16FBSPPX
1.¼"-11	1.¼"-11	1.¼"-11	50.0	50.0	50.0	41.0	50.0	160	20MBSPP-20MBSPP-20FBSPPX

BSP MBSPP-FBSPPX-MBSPP

BSPP 60° male / female swivel / male "T"



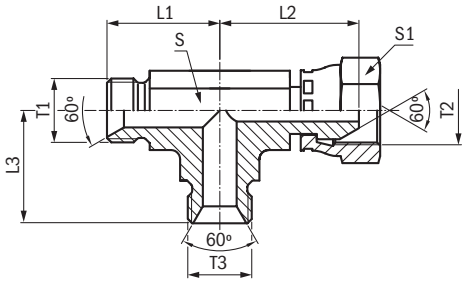

THREAD			LENGTH			HEX/FLATS		WORKING PRESSURE	ADAPTOR
T1	T2	T3	L1	L2	L3	S	S1	WP	REF.
BSPP	BSPP F	BSPP	mm	mm	mm	mm	mm	bar	BSP
¼"-19	¼"-19	¼"-19	27.0	23.8	27.0	14.0	19.0	350	4MBSPP-4FBSPPX-4MBSPP
⅜"-19	⅜"-19	⅜"-19	29.0	28.2	29.0	19.0	22.0	350	6MBSPP-6FBSPPX-6MBSPP
½"-14	½"-14	½"-14	35.0	33.6	35.0	22.0	27.0	315	8MBSPP-8FBSPPX-8MBSPP
¾"-14	¾"-14	¾"-14	43.0	37.9	43.0	27.0	32.0	250	12MBSPP-12FBSPPX-12MBSPP
1"-11	1"-11	1"-11	47.0	45.4	47.0	33.0	41.0	200	16MBSPP-16FBSPPX-16MBSPP
1.¼"-11	1.¼"-11	1.¼"-11	50.0	50.0	50.0	41.0	50.0	160	20MBSPP-20FBSPPX-20MBSPP

BSP MBSPP-FBSPPX-FBSPPX

BSPP 60° male / female swivel / female swivel "T"



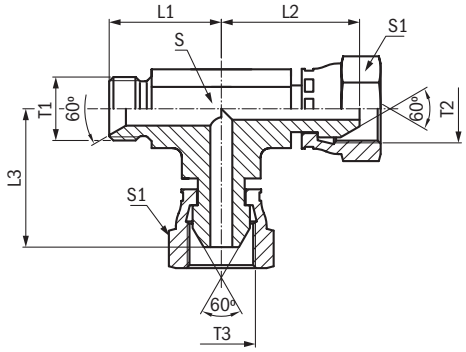

THREAD			LENGTH			HEX/FLATS		WORKING PRESSURE	ADAPTOR
T1	T2	T3	L1	L2	L3	S	S1	WP	REF.
BSPP	BSPP F	BSPP F	mm	mm	mm	mm	mm	bar	BSP
¼"-19	¼"-19	¼"-19	27.0	23.8	23.8	14.0	19.0	350	4MBSPP-4FBSPPX-4FBSPPX
⅜"-19	⅜"-19	⅜"-19	29.0	28.2	28.2	19.0	22.0	350	6MBSPP-6FBSPPX-6FBSPPX
½"-14	½"-14	½"-14	35.0	33.6	33.6	22.0	27.0	315	8MBSPP-8FBSPPX-8FBSPPX
¾"-14	¾"-14	¾"-14	43.0	37.9	37.9	27.0	32.0	250	12MBSPP-12FBSPPX-12FBSPPX
1"-11	1"-11	1"-11	47.0	45.4	45.4	33.0	41.0	200	16MBSPP-16FBSPPX-16FBSPPX

BSP FBSPPX-FBSPPX-MBSPP

BSPP 60° female swivel / female swivel / male "T"



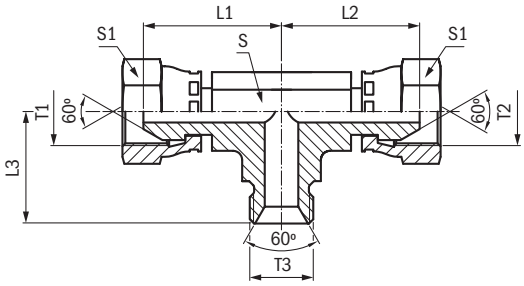

THREAD			LENGTH			HEX/FLATS		WORKING PRESSURE	ADAPTOR
T1	T2	T3	L1	L2	L3	S	S1	WP	REF.
BSPP F	BSPP F	BSPP	mm	mm	mm	mm	mm	bar	BSP
¼"-19	¼"-19	¼"-19	24.0	24.0	27.0	14.0	19.0	350	4FBSPPX-4FBSPPX-4MBSPP
⅜"-19	⅜"-19	⅜"-19	28.2	28.2	29.0	19.0	22.0	350	6FBSPPX-6FBSPPX-6MBSPP
½"-14	½"-14	½"-14	33.6	33.6	35.0	22.0	27.0	315	8FBSPPX-8FBSPPX-8MBSPP
⅝"-14	⅝"-14	⅝"-14	35.0	35.0	37.0	27.0	30.0	315	10FBSPPX-10FBSPPX-10MBSPP
¾"-14	¾"-14	¾"-14	37.9	37.9	43.0	27.0	32.0	250	12FBSPPX-12FBSPPX-12MBSPP
1"-11	1"-11	1"-11	45.4	45.4	47.0	33.0	41.0	200	16FBSPPX-16FBSPPX-16MBSPP

BSP FBSPPX-FBSPPX-FBSPPX

BSPP 60° female swivel / female swivel / female swivel "T"



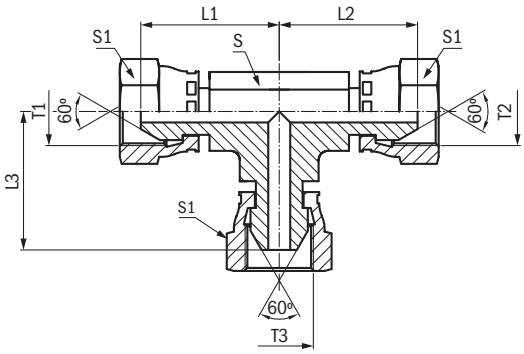

THREAD			LENGTH			HEX/FLATS		WORKING PRESSURE	ADAPTOR
T1	T2	T3	L1	L2	L3	S	S1	WP	REF.
BSPP F	BSPP F	BSPP F	mm	mm	mm	mm	mm	bar	BSP
¼"-19	¼"-19	¼"-19	24.5	24.5	24.5	14.0	19.0	350	4FBSPPX-4FBSPPX-4FBSPPX
⅜"-19	⅜"-19	⅜"-19	27.5	27.5	27.5	19.0	22.0	350	6FBSPPX-6FBSPPX-6FBSPPX
½"-14	½"-14	½"-14	31.5	31.5	31.5	22.0	27.0	315	8FBSPPX-8FBSPPX-8FBSPPX
⅝"-14	⅝"-14	⅝"-14	35.0	35.0	35.0	22.0	30.0	315	10FBSPPX-10FBSPPX-10FBSPPX
¾"-14	¾"-14	¾"-14	41.5	41.5	41.5	27.0	32.0	250	12FBSPPX-12FBSPPX-12FBSPPX
1"-11	1"-11	1"-11	46.0	46.0	46.0	33.0	41.0	200	16FBSPPX-16FBSPPX-16FBSPPX
1.¼"-11	1.¼"-11	1.¼"-11	51.2	51.2	51.2	41.0	50.0	160	20FBSPPX-20FBSPPX-20FBSPPX
1.½"-11	1.½"-11	1.½"-11	63.5	63.5	63.5	48.0	55.0	125	24FBSPPX-24FBSPPX-24FBSPPX

BSP MBSPT-PLUG

BSPP 60° male BSP taper cone plug



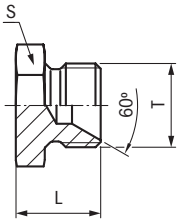

THREAD	LENGTH	HEX/FLATS	WORKING PRESSURE	ADAPTOR
T	L	S	WP	REF.
BSPT	mm	mm	bar	BSP
1/8"-28	16.0	12.0	345	2MBSPT-PLUG

BSP MBSPP-PLUG

BSPP 60° male cone plug



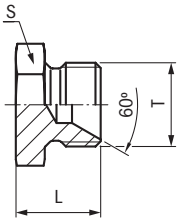

THREAD	LENGTH	HEX/FLATS	WORKING PRESSURE	ADAPTOR
T	L	S	WP	REF.
BSPP	mm	mm	bar	BSP
1/8"-28	16.0	14.0	350	2MBSPP-PLUG
1/4"-19	18.0	19.0	350	4MBSPP-PLUG
3/8"-19	20.0	22.0	350	6MBSPP-PLUG
1/2"-14	24.0	27.0	315	8MBSPP-PLUG
5/8"-14	26.0	30.0	315	10MBSPP-PLUG
3/4"-14	27.0	32.0	250	12MBSPP-PLUG
1"-11	32.0	41.0	200	16MBSPP-PLUG
1.1/4"-11	34.0	50.0	160	20MBSPP-PLUG
1.1/2"-11	39.0	55.0	125	24MBSPP-PLUG
2"-11	45.0	70.0	125	32MBSPP-PLUG

BSP FBSPPX-CAP

BSPP 60° female swivel cap



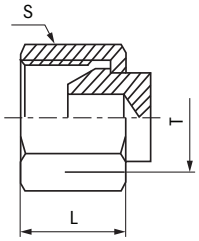

THREAD	LENGTH	HEX/FLATS	WORKING PRESSURE	ADAPTOR
T	L	S	WP	REF.
BSPP F	mm	mm	bar	BSP
⅛"-28	14.0	14.0	350	2FBSPPX-CAP
¼"-19	16.0	19.0	350	4FBSPPX-CAP
⅜"-19	17.5	22.0	350	6FBSPPX-CAP
½"-14	20.5	27.0	315	8FBSPPX-CAP
⅝"-14	22.0	30.0	315	10FBSPPX-CAP
¾"-14	25.0	32.0	250	12FBSPPX-CAP
1"-11	29.0	41.0	200	16FBSPPX-CAP
1.¼"-11	29.2	50.0	160	20FBSPPX-CAP
1.½"-11	32.0	55.0	125	24FBSPPX-CAP
2"-11	34.0	70.0	125	32FBSPPX-CAP

BSP LOCKNUT

BSP locknut for bulkhead



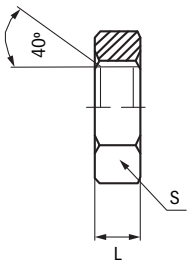

THREAD	LENGTH	HEX/FLATS	WORKING PRESSURE	ADAPTOR
T	L	S	WP	REF.
BSPP	mm	mm	bar	BSP
⅛"-28	5.5	14.0	350	2BSP-LOCKNUT
⅜"-19	7.0	22.0	350	6BSP-LOCKNUT
½"-14	8.0	27.0	315	8BSP-LOCKNUT





DRIVEN BY POSSIBILITY™

JIC ADAPTORS

JIC MJ-MJ

JIC 37° male / male



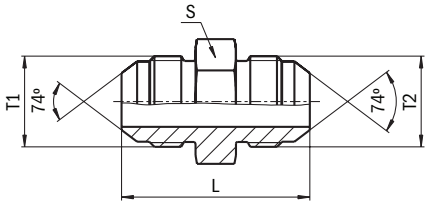

THREAD		LENGTH	HEX/FLATS	WORKING PRESSURE	ADAPTOR
T1	T2	L	S	WP	REF.
JIC	JIC	mm	mm	bar	JIC
7/16"-20	5/16"-24	32.3	12.0	350	4MJ-2MJ
7/16"-20	7/16"-20	34.8	12.0	350	4MJ-4MJ
1/2"-20	7/16"-20	35.0	14.0	350	5MJ-4MJ
1/2"-20	1/2"-20	34.8	14.0	350	5MJ-5MJ
9/16"-18	7/16"-20	35.7	17.0	350	6MJ-4MJ
9/16"-18	9/16"-18	35.8	17.0	350	6MJ-6MJ
3/4"-16	9/16"-18	38.6	22.0	310	8MJ-6MJ
3/4"-16	3/4"-16	41.2	22.0	310	8MJ-8MJ
7/8"-14	3/4"-16	45.2	24.0	240	10MJ-8MJ
7/8"-14	7/8"-14	47.8	24.0	240	10MJ-10MJ
1.1/16"-12	1.1/16"-12	54.9	27.0	240	12MJ-12MJ
1.5/16"-12	1.5/16"-12	57.2	36.0	210	16MJ-16MJ

JIC MJ-MJ90

JIC 37° male / male 90° elbow



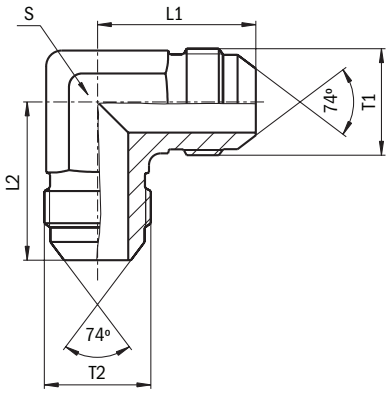

THREAD		LENGTH		HEX/FLATS	WORKING PRESSURE	ADAPTOR
T1	T2	L1	L2	S	WP	REF.
JIC	JIC	mm	mm	mm	bar	JIC
7/16"-20	7/16"-20	22.6	22.6	11.0	350	4MJ-4MJ90
1/2"-20	1/2"-20	24.1	24.1	14.0	350	5MJ-5MJ90
9/16"-18	7/16"-20	26.9	26.7	14.0	350	6MJ-4MJ90
9/16"-18	9/16"-18	26.9	26.9	14.0	350	6MJ-6MJ90
3/4"-16	9/16"-18	31.8	29.0	19.0	310	8MJ-6MJ90
3/4"-16	3/4"-16	31.8	31.8	19.0	310	8MJ-8MJ90
7/8"-14	3/4"-16	36.8	33.8	22.0	240	10MJ-8MJ90
7/8"-14	7/8"-14	36.8	36.8	22.0	240	10MJ-10MJ90
1.1/16"-12	1.1/16"-12	42.2	42.2	27.0	240	12MJ-12MJ90
1.5/16"-12	1.5/16"-12	46.0	46.0	33.0	210	16MJ-16MJ90

JIC MJ-MJBKHD

JIC 37° male / male bulkhead union with lock nut



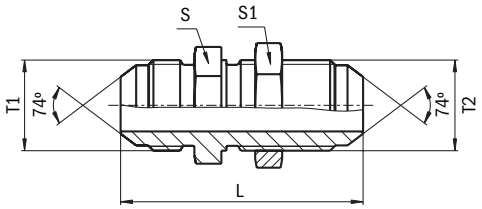

THREAD		LENGTH	HEX/FLATS	WORKING PRESSURE	ADAPTOR
T1	T2	L	S & S1	WP	REF.
JIC	JIC	mm	mm	bar	JIC
7/16"-20	7/16"-20	52.6	17.0	350	4MJ-4MJBKHD
1/2"-20	1/2"-20	52.6	19.0	350	5MJ-5MJBKHD
9/16"-18	9/16"-18	55.4	22.0	350	6MJ-6MJBKHD
3/4"-16	3/4"-16	62.0	24.0	310	8MJ-8MJBKHD
7/8"-14	7/8"-14	69.6	30.0	240	10MJ-10MJBKHD
1.1/16"-12	1.1/16"-12	78.5	36.0	240	12MJ-12MJBKHD
1.5/16"-12	1.5/16"-12	79.8	41.0	210	16MJ-16MJBKHD

JIC MJ-MJBKHD45

JIC 37° male / male bulkhead 45° union elbow with lock nut



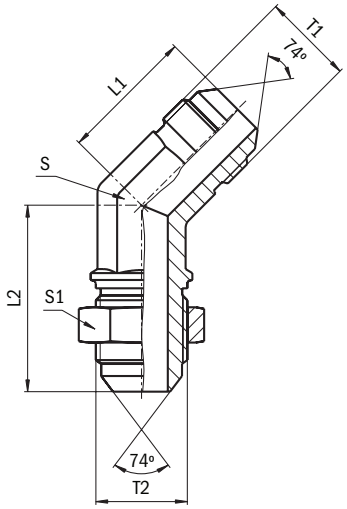

THREAD		LENGTH		HEX/FLATS		WORKING PRESSURE	ADAPTOR
T1	T2	L1	L2	S	S1	WP	REF.
JIC	JIC	mm	mm	mm	mm	bar	JIC
7/16"-20	7/16"-20	18.3	38.9	11.0	17.0	350	4MJ-4MJBKHD45
1/2"-20	1/2"-20	19.6	42.2	14.0	19.0	350	5MJ-5MJBKHD45
9/16"-18	9/16"-18	21.1	42.4	14.0	22.0	350	6MJ-6MJBKHD45
3/4"-16	3/4"-16	24.9	49.3	19.0	24.0	310	8MJ-8MJBKHD45
7/8"-14	7/8"-14	28.2	55.1	22.0	30.0	240	10MJ-10MJBKHD45
1.1/16"-12	1.1/16"-12	32.5	62.0	27.0	36.0	240	12MJ-12MJBKHD45
1.5/16"-12	1.5/16"-12	37.3	65.0	33.0	41.0	210	16MJ-16MJBKHD45

JIC MJ-MJBKHD90

JIC 37° male / male bulkhead 90° union elbow with lock nut



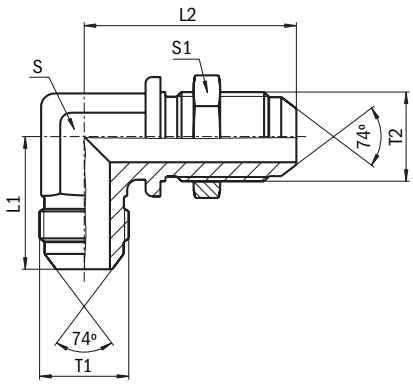

THREAD		LENGTH		HEX/FLATS		WORKING PRESSURE	ADAPTOR
T1	T2	L1	L2	S	S1	WP	REF.
JIC	JIC	mm	mm	mm	mm	bar	JIC
7/16"-20	7/16"-20	24.6	40.4	11.0	17.0	350	4MJ-4MJBKHD90
1/2"-20	1/2"-20	26.9	43.7	14.0	19.0	350	5MJ-5MJBKHD90
9/16"-18	9/16"-18	26.9	46.0	14.0	22.0	350	6MJ-6MJBKHD90
3/4"-16	3/4"-16	34.5	53.6	19.0	24.0	310	8MJ-8MJBKHD90
7/8"-14	7/8"-14	39.6	60.7	22.0	30.0	240	10MJ-10MJBKHD90
1.1/16"-12	1.1/16"-12	45.2	67.8	27.0	36.0	240	12MJ-12MJBKHD90
1.5/16"-12	1.5/16"-12	49.3	71.1	33.0	41.0	210	16MJ-16MJBKHD90

JIC MJ-MBSPT

JIC 37° male / male BSP taper



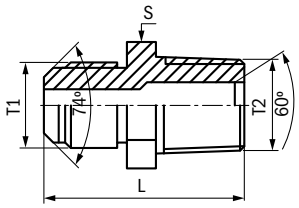

THREAD		LENGTH	HEX/FLATS	WORKING PRESSURE	ADAPTOR
T1	T2	L	S	WP	REF.
JIC	BSPT	mm	mm	bar	JIC
7/8"-14	3/4"-14	48.5	30.0	240	10MJ-12MBSPT

JIC MJ-MBSPPCOR

JIC 37° male / male BSPP with O-Ring and retaining ring



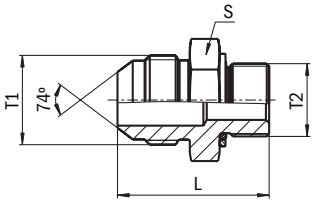

THREAD		LENGTH	HEX/FLATS	WORKING PRESSURE	ADAPTOR
T1	T2	L	S	WP	REF.
JIC	BSPP	mm	mm	bar	JIC
7/16"-20	1/8"-28	30.0	14.0	200	4MJ-2MBSPPCOR
7/16"-20	1/4"-19	35.0	19.0	200	4MJ-4MBSPPCOR
7/16"-20	3/8"-19	35.0	22.0	200	4MJ-6MBSPPCOR
7/16"-20	1/2"-14	38.0	30.0	200	4MJ-8MBSPPCOR
9/16"-18	1/8"-28	29.5	17.0	200	6MJ-2MBSPPCOR
9/16"-18	1/4"-19	32.0	19.0	200	6MJ-4MBSPPCOR
9/16"-18	3/8"-19	34.5	22.0	200	6MJ-6MBSPPCOR
9/16"-18	1/2"-14	38.0	27.0	200	6MJ-8MBSPPCOR
3/4"-16	1/4"-19	35.0	19.0	200	8MJ-4MBSPPCOR
3/4"-16	3/8"-19	36.0	22.0	200	8MJ-6MBSPPCOR
3/4"-16	1/2"-14	41.5	27.0	200	8MJ-8MBSPPCOR
3/4"-16	3/4"-14	45.0	36.0	200	8MJ-12MBSPPCOR
3/4"-16	1"-11	48.0	46.0	200	8MJ-16MBSPPCOR
7/8"-14	3/8"-19	40.5	24.0	200	10MJ-6MBSPPCOR
7/8"-14	1/2"-14	44.0	27.0	200	10MJ-8MBSPPCOR
7/8"-14	3/4"-14	46.5	36.0	200	10MJ-12MBSPPCOR
1.1/16"-12	1/2"-14	46.0	30.0	200	12MJ-8MBSPPCOR
1.1/16"-12	3/4"-14	49.2	36.0	200	12MJ-12MBSPPCOR
1.5/16"-12	3/4"-14	48.5	36.0	200	16MJ-12MBSPPCOR
1.5/16"-12	1"-11	53.5	46.0	200	16MJ-16MBSPPCOR
1.5/16"-12	1.1/4"-11	57.0	50.0	160	16MJ-20MBSPPCOR
1.5/8"-12	1.1/4"-11	57.0	50.0	160	20MJ-20MBSPPCOR
1.7/8"-12	1.1/4"-11	61.5	55.0	140	24MJ-20MBSPPCOR

JIC MJ-MBSPPACOR45

JIC 37° male / adjustable male BSPP 45° elbow with O-Ring and retaining ring



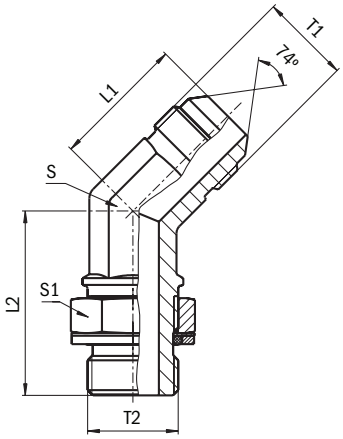

THREAD		LENGTH		HEX/FLATS		WORKING PRESSURE	ADAPTOR
T1	T2	L1	L2	S	S1	WP	REF.
JIC	BSPP	mm	mm	mm	mm	bar	JIC
7/16"-20	1/8"-28	18.0	26.5	11.0	14.0	200	4MJ-2MBSPPACOR45
7/16"-20	1/4"-19	21.0	29.0	14.0	19.0	200	4MJ-4MBSPPACOR45
9/16"-18	1/4"-19	21.0	29.0	14.0	19.0	200	6MJ-4MBSPPACOR45
9/16"-18	3/8"-19	22.0	33.0	19.0	22.0	200	6MJ-6MBSPPACOR45
9/16"-18	1/2"-14	22.0	38.5	22.0	27.0	200	6MJ-8MBSPPACOR45
3/4"-16	3/8"-19	25.0	33.0	19.0	22.0	200	8MJ-6MBSPPACOR45
3/4"-16	1/2"-14	25.5	38.5	22.0	27.0	200	8MJ-8MBSPPACOR45
7/8"-14	1/2"-14	28.0	38.5	22.0	27.0	200	10MJ-8MBSPPACOR45
7/8"-14	3/4"-14	30.0	44.0	27.0	36.0	200	10MJ-12MBSPPACOR45
1.1/16"-12	3/4"-14	32.5	44.0	27.0	36.0	200	12MJ-12MBSPPACOR45
1.5/16"-12	1"-11	37.0	47.0	33.0	41.0	200	16MJ-16MBSPPACOR45

JIC MJ-MBSPPACOR90

JIC 37° male / adjustable male
BSPP 90° elbow with O-Ring
and retaining ring



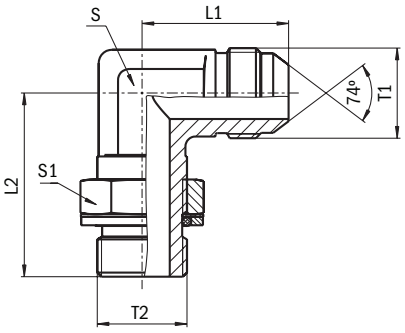

THREAD		LENGTH		HEX/FLATS		WORKING PRESSURE	ADAPTOR
T1	T2	L1	L2	S	S1	WP	REF.
JIC	BSPP	mm	mm	mm	mm	bar	JIC
7/16"-20	1/8"-28	22.5	26.0	11.0	14.0	200	4MJ-2MBSPPACOR90
7/16"-20	1/4"-19	27.0	31.5	14.0	19.0	200	4MJ-4MBSPPACOR90
7/16"-20	3/8"-19	28.5	36.5	19.0	22.0	200	4MJ-6MBSPPACOR90
1/2"-20	1/8"-28	24.0	28.0	14.0	14.0	200	5MJ-2MBSPPACOR90
1/2"-20	1/4"-19	27.0	31.0	14.0	19.0	200	5MJ-4MBSPPACOR90
1/2"-20	3/8"-19	28.5	36.5	19.0	22.0	200	5MJ-6MBSPPACOR90
9/16"-18	1/4"-19	27.0	31.5	14.0	19.0	200	6MJ-4MBSPPACOR90
9/16"-18	3/8"-19	28.5	36.5	19.0	22.0	200	6MJ-6MBSPPACOR90
9/16"-18	1/2"-14	31.0	43.0	22.0	27.0	200	6MJ-8MBSPPACOR90
3/4"-16	1/4"-19	31.5	33.5	19.0	19.0	200	8MJ-4MBSPPACOR90
3/4"-16	3/8"-19	31.5	36.5	19.0	22.0	200	8MJ-6MBSPPACOR90
3/4"-16	1/2"-14	34.0	43.0	22.0	27.0	200	8MJ-8MBSPPACOR90
3/4"-16	3/4"-14	37.0	49.0	27.0	36.0	200	8MJ-12MBSPPACOR90
7/8"-14	3/8"-19	36.5	39.5	22.0	22.0	200	10MJ-6MBSPPACOR90
7/8"-14	1/2"-14	36.5	43.0	22.0	27.0	200	10MJ-8MBSPPACOR90
7/8"-14	3/4"-14	39.5	49.0	27.0	36.0	200	10MJ-12MBSPPACOR90
1.1/16"-12	1/2"-14	42.0	45.5	27.0	27.0	200	12MJ-8MBSPPACOR90
1.1/16"-12	3/4"-14	42.0	49.0	27.0	36.0	200	12MJ-12MBSPPACOR90
1.1/16"-12	1"-11	44.7	52.0	33.0	41.0	200	12MJ-16MBSPPACOR90
1.5/16"-12	3/4"-14	46.0	52.0	33.0	36.0	200	16MJ-12MBSPPACOR90
1.5/16"-12	1"-11	46.0	52.0	33.0	41.0	200	16MJ-16MBSPPACOR90
1.5/16"-12	1.1/4"-11	51.0	57.0	41.0	50.0	160	16MJ-20MBSPPACOR90
1.5/8"-12	1.1/4"-11	52.0	58.0	41.0	50.0	160	20MJ-20MBSPPACOR90
1.7/8"-12	1.1/2"-11	59.0	61.0	48.0	55.0	140	24MJ-24MBSPPACOR90

JIC MJ-MBSPPWD

JIC 37° male / male BSPP with captive seal



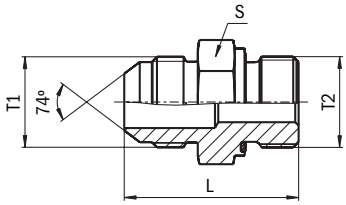

THREAD		LENGTH	HEX/FLATS	WORKING PRESSURE	ADAPTOR
T1	T2	L	S	WP	REF.
JIC	BSPP	mm	mm	bar	JIC
7/16"-20	1/8"-28	29.0	14.0	315	4MJ-2MBSPPWD
7/16"-20	1/4"-19	34.0	19.0	315	4MJ-4MBSPPWD
7/16"-20	3/8"-19	34.0	22.0	315	4MJ-6MBSPPWD
7/16"-20	1/2"-14	39.5	27.0	315	4MJ-8MBSPPWD
1/2"-20	1/8"-28	30.5	17.0	315	5MJ-2MBSPPWD
1/2"-20	1/4"-19	34.0	19.0	315	5MJ-4MBSPPWD
1/2"-20	3/8"-19	36.0	22.0	315	5MJ-6MBSPPWD
9/16"-18	1/8"-28	30.0	17.0	315	6MJ-2MBSPPWD
9/16"-18	1/4"-19	34.0	19.0	315	6MJ-4MBSPPWD
9/16"-18	3/8"-19	34.5	22.0	315	6MJ-6MBSPPWD
9/16"-18	1/2"-14	38.0	27.0	250	6MJ-8MBSPPWD
9/16"-18	3/4"-14	45.0	32.0	250	6MJ-12MBSPPWD
3/4"-16	1/4"-19	38.5	19.0	310	8MJ-4MBSPPWD
3/4"-16	3/8"-19	37.5	22.0	310	8MJ-6MBSPPWD
3/4"-16	1/2"-14	39.5	27.0	250	8MJ-8MBSPPWD
3/4"-16	3/4"-14	46.7	32.0	250	8MJ-12MBSPPWD
3/4"-16	1"-11	48.0	41.0	250	8MJ-16MBSPPWD
7/8"-14	3/8"-19	41.3	24.0	240	10MJ-6MBSPPWD
7/8"-14	1/2"-14	45.0	27.0	240	10MJ-8MBSPPWD
7/8"-14	3/4"-14	49.0	32.0	240	10MJ-12MBSPPWD
7/8"-14	1"-11	50.8	41.0	240	10MJ-16MBSPPWD
1.1/16"-12	1/2"-14	48.0	27.0	240	12MJ-8MBSPPWD
1.1/16"-12	3/4"-14	52.0	32.0	240	12MJ-12MBSPPWD
1.1/16"-12	1"-11	53.5	41.0	240	12MJ-16MBSPPWD
1.1/16"-12	1.1/4"-11	56.0	50.0	160	12MJ-20MBSPPWD
1.5/16"-12	3/4"-14	52.5	36.0	210	16MJ-12MBSPPWD
1.5/16"-12	1"-11	55.0	41.0	210	16MJ-16MBSPPWD
1.5/16"-12	1.1/4"-11	57.5	50.0	160	16MJ-20MBSPPWD
1.5/8"-12	3/4"-14	54.5	46.0	170	20MJ-12MBSPPWD
1.5/8"-12	1"-11	58.5	46.0	170	20MJ-16MBSPPWD
1.5/8"-12	1.1/4"-11	58.5	50.0	160	20MJ-20MBSPPWD
1.5/8"-12	1.1/2"-11	63.5	55.0	160	20MJ-24MBSPPWD

JIC MJ-MP

JIC 37° male / male NPT



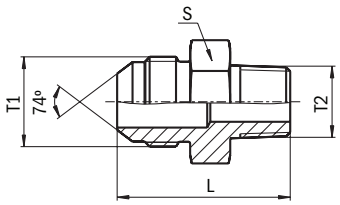

THREAD		LENGTH	HEX/FLATS	WORKING PRESSURE	ADAPTOR
T1	T2	L	S	WP	REF.
JIC	NPT	mm	mm	bar	JIC
7/16"-20	1/8"-27	31.0	14.0	345	4MJ-2MP
7/16"-20	1/4"-18	36.1	14.0	275	4MJ-4MP
7/16"-20	3/8"-18	36.1	19.0	210	4MJ-6MP
1/2"-20	1/8"-27	31.0	14.0	345	5MJ-2MP
1/2"-20	1/4"-18	36.1	14.0	275	5MJ-4MP
9/16"-18	1/4"-18	36.3	17.0	275	6MJ-4MP
9/16"-18	3/8"-18	36.3	19.0	210	6MJ-6MP
9/16"-18	1/2"-14	42.9	22.0	210	6MJ-8MP
3/4"-16	3/8"-18	38.9	22.0	210	8MJ-6MP
3/4"-16	1/2"-14	45.5	22.0	210	8MJ-8MP
3/4"-16	3/4"-14	47.0	27.0	170	8MJ-12MP
7/8"-14	3/8"-18	43.2	24.0	210	10MJ-6MP
7/8"-14	1/2"-14	48.0	24.0	210	10MJ-8MP
7/8"-14	3/4"-14	49.5	27.0	170	10MJ-12MP
7/8"-14	1"-11.5	54.6	36.0	140	10MJ-16MP
1.1/16"-12	3/4"-14	52.3	27.0	170	12MJ-12MP
1.1/16"-12	1"-11.5	57.2	36.0	140	12MJ-16MP
1.5/16"-12	1"-11.5	58.4	36.0	140	16MJ-16MP

JIC MJ-MP90

JIC 37° male / male NPT 90° elbow



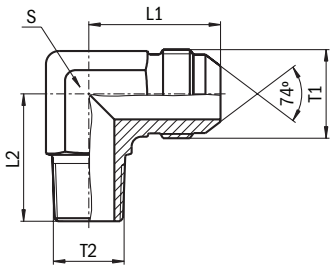

THREAD		LENGTH		HEX/FLATS	WORKING PRESSURE	ADAPTOR
T1	T2	L1	L2	S	WP	REF.
JIC	NPT	mm	mm	mm	bar	JIC
7/16"-20	1/8"-27	22.6	19.8	11.0	345	4MJ-2MP90
7/16"-20	1/4"-18	26.7	27.7	14.0	275	4MJ-4MP90
9/16"-18	1/4"-18	26.9	27.7	14.0	275	6MJ-4MP90
9/16"-18	3/8"-18	29.0	31.0	19.0	210	6MJ-6MP90
9/16"-18	1/2"-14	31.0	37.3	22.0	210	6MJ-8MP90
3/4"-16	1/2"-14	33.8	37.3	22.0	210	8MJ-8MP90
7/8"-14	1/2"-14	36.8	37.3	22.0	210	10MJ-8MP90
1.1/16"-12	3/4"-14	42.2	40.4	27.0	170	12MJ-12MP90
1.5/16"-12	1"-11.5	46.0	50.0	33.0	140	16MJ-16MP90

JIC MJ-MB

JIC 37° male / male SAE 'O' Ring bos



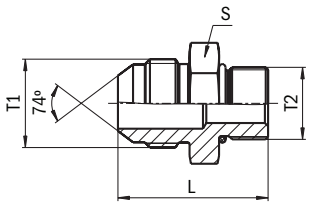

THREAD		LENGTH	HEX/FLATS	WORKING PRESSURE	ADAPTOR
T1	T2	L	S	WP	REF.
JIC	SAE O	mm	mm	bar	JIC
7/16"-20	7/16"-20 UNF	31.2	14.0	315	4MJ-4MB
7/16"-20	9/16"-18 UNF	32.8	17.0	315	4MJ-6MB
7/16"-20	3/4"-16 UNF	34.8	22.0	315	4MJ-8MB
7/16"-20	7/8"-14 UNF	37.9	27.0	250	4MJ-10MB
1/2"-20	7/16"-20 UNF	31.2	17.0	315	5MJ-4MB
1/2"-20	1/2"-20 UNF	31.2	17.0	315	5MJ-5MB
1/2"-20	9/16"-18 UNF	32.8	17.0	315	5MJ-6MB
9/16"-18	7/16"-20 UNF	32.3	17.0	315	6MJ-4MB
9/16"-18	9/16"-18 UNF	33.0	17.0	315	6MJ-6MB
9/16"-18	3/4"-16 UNF	35.0	22.0	315	6MJ-8MB
9/16"-18	7/8"-14 UNF	38.0	27.0	250	6MJ-10MB
9/16"-18	1.1/16"-12 UN	42.2	32.0	250	6MJ-12MB
3/4"-16	9/16"-18 UNF	36.6	19.0	310	8MJ-6MB
3/4"-16	3/4"-16 UNF	37.6	22.0	310	8MJ-8MB
3/4"-16	7/8"-14 UNF	40.6	27.0	250	8MJ-10MB
3/4"-16	1.1/16"-12 UN	44.7	32.0	250	8MJ-12MB
3/4"-16	1.5/16"-12 UN	45.5	41.0	200	8MJ-16MB
7/8"-14	3/4"-16 UNF	41.7	24.0	240	10MJ-8MB
7/8"-14	7/8"-14 UNF	43.2	27.0	240	10MJ-10MB
7/8"-14	1.1/16"-12 UN	47.2	32.0	240	10MJ-12MB
1.1/16"-12	3/4"-16 UNF	49.3	30.0	240	12MJ-8MB
1.1/16"-12	7/8"-14 UNF	47.8	30.0	240	12MJ-10MB
1.1/16"-12	1.1/16"-12 UN	50.0	32.0	240	12MJ-12MB
1.1/16"-12	1.5/16"-12 UN	50.6	41.0	200	12MJ-16MB
1.5/16"-12	1.1/16"-12 UN	51.8	36.0	210	16MJ-12MB
1.5/16"-12	1.5/16"-12 UN	51.8	41.0	200	16MJ-16MB
1.5/16"-12	1.5/8"-12 UN	53.9	50.0	160	16MJ-20MB
1.5/8"-12	1.1/16"-12 UN	58.4	46.0	170	20MJ-12MB

JIC MJ-MB LONG

JIC 37° male / male SAE 'O' Ring boss long version



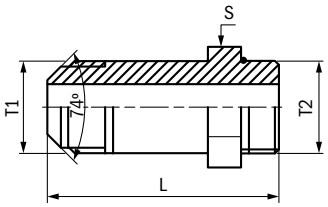

THREAD		LENGTH	HEX/FLATS	WORKING PRESSURE	ADAPTOR
T1	T2	L	S	WP	REF.
JIC	SAE O	mm	mm	bar	JIC
7/16"-20	7/16"-20 UNF	52.8	14.0	315	4MJ-4MB LONG
9/16"-18	9/16"-18 UNF	58.5	17.0	315	6MJ-6MB LONG

JIC MJ-MBA45

JIC 37° male / adjustable male SAE 'O' Ring boss 45° elbow



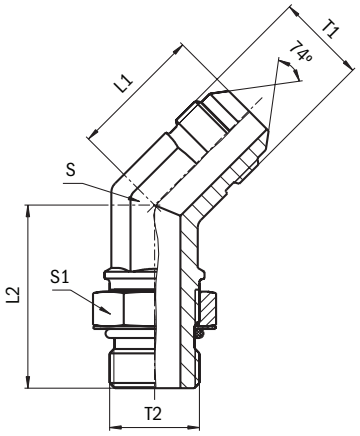

THREAD		LENGTH		HEX/FLATS		WORKING PRESSURE	ADAPTOR
T1	T2	L1	L2	S	S1	WP	REF.
JIC	SAE O	mm	mm	mm	mm	bar	JIC
7/16"-20	7/16"-20 UNF	18.3	26.7	11.0	14.0	315	4MJ-4MBA45
7/16"-20	9/16"-18 UNF	20.8	29.0	14.0	19.0	315	4MJ-6MBA45
9/16"-18	9/16"-18 UNF	21.1	29.0	14.0	19.0	315	6MJ-6MBA45
9/16"-18	3/4"-16 UNF	22.1	33.0	19.0	22.0	315	6MJ-8MBA45
3/4"-16	9/16"-18 UNF	24.9	29.7	19.0	19.0	310	8MJ-6MBA45
3/4"-16	3/4"-16 UNF	24.9	33.0	19.0	22.0	310	8MJ-8MBA45
3/4"-16	7/8"-14 UNF	25.2	38.6	22.0	27.0	250	8MJ-10MBA45
7/8"-14	3/4"-16 UNF	28.2	34.5	22.0	22.0	240	10MJ-8MBA45
7/8"-14	7/8"-14 UNF	28.2	38.6	22.0	27.0	240	10MJ-10MBA45
1.1/16"-12	1.1/16"-12 UN	32.5	43.9	27.0	32.0	240	12MJ-12MBA45
1.5/16"-12	1.5/16"-12 UN	37.3	47.2	33.0	41.0	200	16MJ-16MBA45

JIC MJ-MBA90

JIC 37° male / adjustable male
SAE 'O' Ring boss 90° elbow



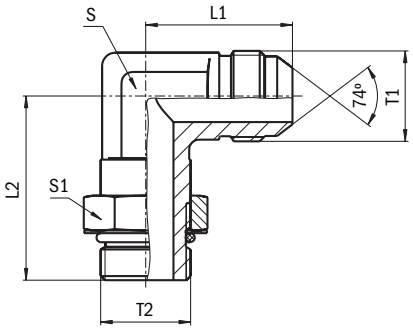

THREAD		LENGTH		HEX/FLATS		WORKING PRESSURE	ADAPTOR
T1	T2	L1	L2	S	S1	WP	REF.
JIC	SAE O	mm	mm	mm	mm	bar	JIC
7/16"-20	7/16"-20 UNF	22.6	26.1	11.0	14.0	315	4MJ-4MBA90
7/16"-20	9/16"-18 UNF	26.7	31.8	14.0	19.0	315	4MJ-6MBA90
1/2"-20	1/2"-20 UNF	24.1	28.7	14.0	17.0	315	5MJ-5MBA90
9/16"-18	7/16"-20 UNF	26.9	30.2	14.0	14.0	315	6MJ-4MBA90
9/16"-18	9/16"-18 UNF	26.9	31.8	14.0	19.0	315	6MJ-6MBA90
9/16"-18	3/4"-16 UNF	29.0	36.8	19.0	22.0	315	6MJ-8MBA90
3/4"-16	9/16"-18 UNF	31.8	33.8	19.0	19.0	310	8MJ-6MBA90
3/4"-16	3/4"-16 UNF	31.8	36.8	19.0	22.0	310	8MJ-8MBA90
3/4"-16	7/8"-14 UNF	33.8	43.2	22.0	27.0	250	8MJ-10MBA90
7/8"-14	7/8"-14 UNF	36.8	43.2	22.0	27.0	240	10MJ-10MBA90
7/8"-14	1.1/16"-12 UN	39.1	49.3	27.0	32.0	240	10MJ-12MBA90
1.1/16"-12	1.1/16"-12 UN	42.2	49.3	27.0	32.0	240	12MJ-12MBA90
1.1/16"-12	1.5/16"-12 UN	44.7	52.1	33.0	41.0	200	12MJ-16MBA90
1.5/16"-12	1.5/16"-12 UN	46.0	52.1	33.0	41.0	200	16MJ-16MBA90

JIC MJ-MBA90 LONG

JIC 37° male / adjustable male
SAE 'O' Ring boss 90° elbow long version



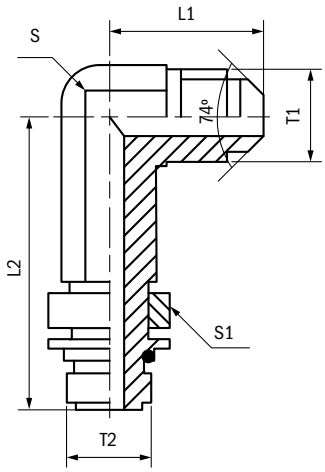

THREAD		LENGTH		HEX/FLATS		WORKING PRESSURE	ADAPTOR
T1	T2	L1	L2	S	S1	WP	REF.
JIC	SAE O	mm	mm	mm	mm	bar	JIC
7/16"-20	7/16"-20 UNF	22.6	43.9	11.0	14.0	315	4MJ-4MBA90 LONG

JIC MJ-MMOR

JIC 37° male / male metric with O-Ring



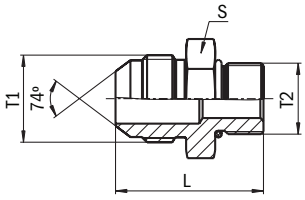

THREAD		LENGTH	HEX/FLATS	WORKING PRESSURE	ADAPTOR
T1	T2	L	S	WP	REF.
JIC	METRIC	mm	mm	bar	JIC
7/16"-20	M10x1	30.0	14.0	250	4MJ-10MMOR
9/16"-18	M14x1.5	33.5	19.0	250	6MJ-14MMOR
9/16"-18	M16x1.5	35.0	22.0	250	6MJ-16MMOR
9/16"-18	M18x1.5	37.0	24.0	250	6MJ-18MMOR
3/4"-16	M16x1.5	38.0	22.0	250	8MJ-16MMOR
3/4"-16	M18x1.5	39.5	24.0	250	8MJ-18MMOR
7/8"-14	M14x1.5	41.0	24.0	240	10MJ-14MMOR
7/8"-14	M18x1.5	42.0	24.0	240	10MJ-18MMOR
7/8"-14	M22x1.5	44.5	27.0	160	10MJ-22MMOR
1.1/16"-12	M22x1.5	45.5	27.0	160	12MJ-22MMOR
1.1/16"-12	M27x2	51.0	32.0	160	12MJ-27MMOR

JIC MJ-MMAOR90

JIC 37° male / adjustable male metric 90° elbow with O-Ring



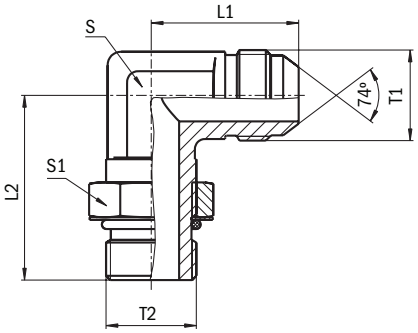

THREAD		LENGTH		HEX/FLATS		WORKING PRESSURE	ADAPTOR
T1	T2	L1	L2	S	S1	WP	REF.
JIC	METRIC	mm	mm	mm	mm	bar	JIC
1/2"-20	M12x1.5	27.0	31.5	14.0	17.0	250	5MJ-12MMAOR90
9/16"-18	M14x1.5	27.0	32.5	14.0	19.0	250	6MJ-14MMAOR90
3/4"-16	M18x1.5	31.5	37.0	19.0	24.0	250	8MJ-18MMAOR90
7/8"-14	M18x1.5	36.5	41.5	22.0	24.0	240	10MJ-18MMAOR90
7/8"-14	M22x1.5	36.5	43.0	22.0	27.0	240	10MJ-22MMAOR90
1.1/16"-12	M22x1.5	42.0	45.5	27.0	27.0	240	12MJ-22MMAOR90
1.1/16"-12	M27x2	42.0	51.5	27.0	32.0	240	12MJ-27MMAOR90

JIC MJ-MMCOR

JIC 37° male / male metric with O-Ring and retaining ring



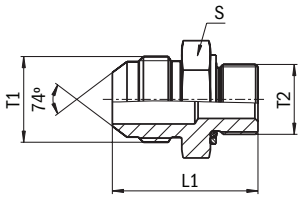

THREAD		LENGTH	HEX/FLATS	WORKING PRESSURE	ADAPTOR
T1	T2	L	S	WP	REF.
JIC	METRIC	mm	mm	bar	JIC
9/16"-18	M14x1.5	33.5	19.0	250	6MJ-14MMCOR
9/16"-18	M18x1.5	37.0	24.0	250	6MJ-18MMCOR

JIC MJ-MMACOR90

JIC 37° male / adjustable male metric
90° elbow with O-Ring and retaining ring



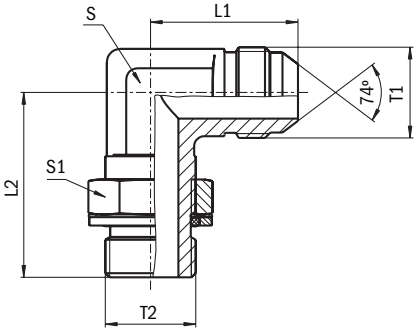

THREAD		LENGTH		HEX/FLATS		WORKING PRESSURE	ADAPTOR
T1	T2	L1	L2	S	S1	WP	REF.
JIC	METRIC	mm	mm	mm	mm	bar	JIC
7/16"-20	M10x1	22.5	27.5	11.0	14.0	250	4MJ-10MMACOR90

JIC MJ-MMWD

JIC 37° male / male metric with captive seal



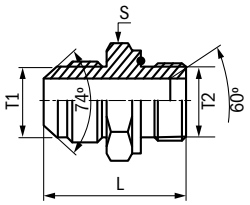

THREAD		LENGTH	HEX/FLATS	WORKING PRESSURE	ADAPTOR
T1	T2	L	S	WP	REF.
JIC	METRIC	mm	mm	bar	JIC
9/16"-18	M12x1.5	34.5	17.0	350	6MJ-12MMWD
9/16"-18	M14x1.5	33.0	19.0	350	6MJ-14MMWD
9/16"-18	M16x1.5	36.5	22.0	350	6MJ-16MMWD
9/16"-18	M18x1.5	35.0	24.0	350	6MJ-18MMWD
9/16"-18	M22x1.5	38.2	27.0	350	6MJ-22MMWD
3/4"-16	M14x1.5	38.5	22.0	310	8MJ-14MMWD
3/4"-16	M16x1.5	37.7	22.0	310	8MJ-16MMWD
3/4"-16	M18x1.5	39.0	24.0	310	8MJ-18MMWD
3/4"-16	M22x1.5	40.7	27.0	310	8MJ-22MMWD
7/8"-14	M16x1.5	41.0	24.0	240	10MJ-16MMWD
7/8"-14	M18x1.5	41.5	24.0	240	10MJ-18MMWD
7/8"-14	M22x1.5	43.5	27.0	240	10MJ-22MMWD
7/8"-14	M27x2	47.3	32.0	240	10MJ-27MMWD
1.1/16"-12	M22x1.5	46.5	30.0	240	12MJ-22MMWD
1.1/16"-12	M26x1.5	50.0	32.0	160	12MJ-26MMWD
1.1/16"-12	M33x2	50.5	41.0	240	12MJ-33MMWD
1.5/16"-12	M33x2	51.5	41.0	210	16MJ-33MMWD
1.5/8"-12	M33x2	56.5	46.0	170	20MJ-33MMWD
1.5/8"-12	M42x2	59.5	50.0	170	20MJ-42MMWD
1.5/8"-12	M48x2	66.0	55.0	170	20MJ-48MMWD

JIC MJ-MMWD LONG

JIC 37° male / male metric with captive seal long version



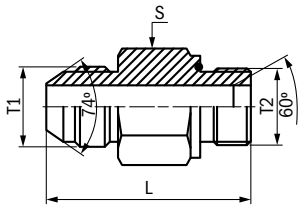

THREAD		LENGTH	HEX/FLATS	WORKING PRESSURE	ADAPTOR
T1	T2	L	S	WP	REF.
JIC	METRIC	mm	mm	bar	JIC
7/8"-14	M26x1.5	59.0	32.0	160	10MJ-26MMWD LONG
1.5/8"-12	M42x2	88.0	50.0	100	20MJ-42MMWD LONG

JIC MJ-FJ FIXED

JIC 37° male / female with fixed nut
(non swivelling version)



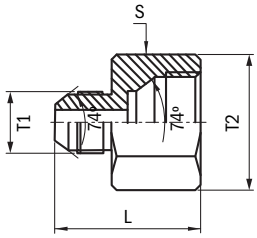

THREAD		LENGTH	HEX/FLATS	WORKING PRESSURE	ADAPTOR
T1	T2	L	S	WP	REF.
JIC	JIC F	mm	mm	bar	JIC
3/4"-16	3/4"-16	36.3	24.0	310	8MJ-8FJ FIXED

JIC MJ-FJX-W/N

JIC 37° male / female with wire-on-nut



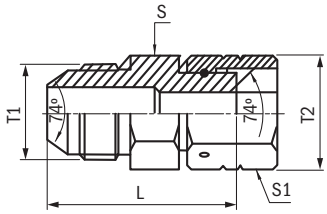

THREAD		LENGTH	HEX/FLATS		WORKING PRESSURE	ADAPTOR
T1	T2	L	S	S1	WP	REF.
JIC	JIC F	mm	mm	mm	bar	JIC
9/16"-18	9/16"-18	33.0	17.0	19.0	350	6MJ-6FJX-W/N
9/16"-18	3/4"-16	36.0	22.0	22.0	310	6MJ-8FJX-W/N
3/4"-16	9/16"-18	36.5	22.0	19.0	310	8MJ-6FJX-W/N
3/4"-16	3/4"-16	38.5	22.0	22.0	310	8MJ-8FJX-W/N
7/8"-14	3/4"-16	43.0	24.0	22.0	240	10MJ-8FJX-W/N
1.5/16-12	1.5/16"-12	50.5	36.0	41.0	210	16MJ-16FJX-W/N

JIC MJ-FJX45

JIC 37° male / female swivel 45° elbow



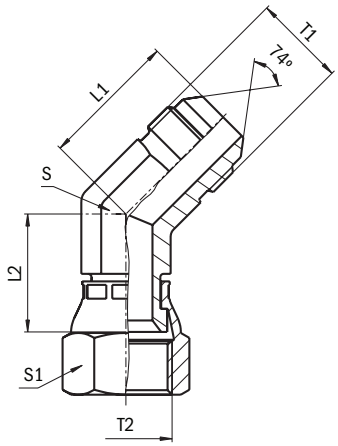

THREAD		LENGTH		HEX/FLATS		WORKING PRESSURE	ADAPTOR
T1	T2	L1	L2	S	S1	WP	REF.
JIC	JIC F	mm	mm	mm	mm	bar	JIC
7/16"-20	7/16"-20	18.3	14.9	11.0	14.0	350	4MJ-4FJX45
1/2"-20	1/2"-20	19.6	15.6	14.0	17.0	350	5MJ-5FJX45
9/16"-18	9/16"-18	21.1	18.9	14.0	19.0	350	6MJ-6FJX45
3/4"-16	3/4"-16	24.9	21.8	19.0	22.0	310	8MJ-8FJX45
7/8"-14	7/8"-14	28.2	28.2	22.0	27.0	240	10MJ-10FJX45
1.1/16"-12	1.1/16"-12	32.5	32.5	27.0	32.0	240	12MJ-12FJX45
1.5/16"-12	1.5/16"-12	37.3	37.3	33.0	41.0	210	16MJ-16FJX45

JIC MJ-FJX45-W/N

JIC 37° male / female swivel 45° elbow with wire-on-nut

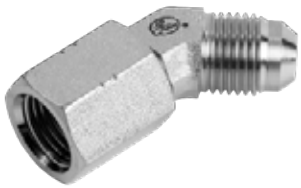

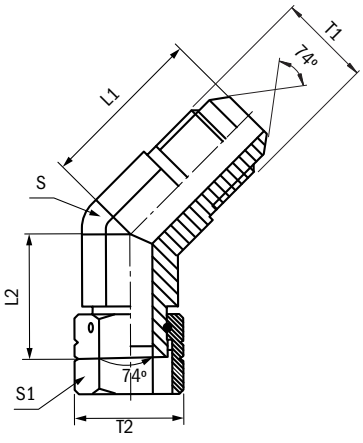

THREAD		LENGTH		HEX/FLATS		WORKING PRESSURE	ADAPTOR
T1	T2	L1	L2	S	S1	WP	REF.
JIC	JIC F	mm	mm	mm	mm	bar	JIC
9/16"-18	9/16"-18	21.1	18.9	14.0	19.0	350	6MJ-6FJX45-W/N
7/8"-14	7/8"-14	28.2	23.9	22.0	27.0	240	10MJ-10FJX45-W/N

JIC MJ-FJX90

JIC 37° male / female swivel 90° elbow



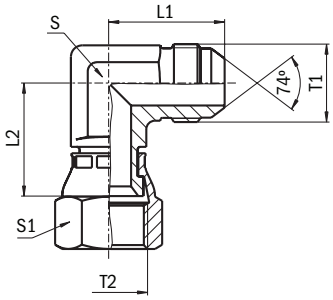

THREAD		LENGTH		HEX/FLATS		WORKING PRESSURE	ADAPTOR
T1	T2	L1	L2	S	S1	WP	REF.
JIC	JIC F	mm	mm	mm	mm	bar	JIC
7/16"-20	7/16"-20	22.6	16.7	11.0	14.0	350	4MJ-4FJX90
1/2"-20	1/2"-20	24.1	17.4	14.0	17.0	350	5MJ-5FJX90
9/16"-18	9/16"-18	26.9	22.2	14.0	19.0	350	6MJ-6FJX90
3/4"-16	3/4"-16	31.8	24.3	19.0	22.0	310	8MJ-8FJX90
7/8"-14	7/8"-14	36.8	28.5	22.0	27.0	240	10MJ-10FJX90
1.1/16"-12	1.1/16"-12	42.2	30.2	27.0	32.0	240	12MJ-12FJX90
1.3/16"-12	1.3/16"-12	45.7	30.5	33.0	36.0	210	14MJ-14FJX90
1.5/16"-12	1.5/16"-12	46.0	35.7	33.0	41.0	210	16MJ-16FJX90
1.5/8"-12	1.5/8"-12	52.3	42.8	41.0	50.0	170	20MJ-20FJX90

JIC MJ-FJX90-W/N

JIC 37° male / female swivel
90° elbow with wire-on-nut



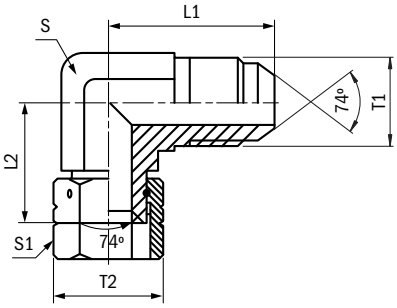

THREAD		LENGTH		HEX/FLATS		WORKING PRESSURE	ADAPTOR
T1	T2	L1	L2	S	S1	WP	REF.
JIC	JIC F	mm	mm	mm	mm	bar	JIC
9/16"-18	9/16"-18	26.9	22.2	14.0	19.0	350	6MJ-6FJX90-W/N
3/4"-16	3/4"-16	31.8	24.3	19.0	22.0	310	8MJ-8FJX90-W/N
7/8"-14	7/8"-14	36.8	28.5	22.0	27.0	240	10MJ-10FJX90-W/N
1.1/16"-12	1.1/16"-12	42.2	30.2	27.0	32.0	240	12MJ-12FJX90-W/N
1.5/16"-12	1.5/16"-12	46.0	35.7	33.0	41.0	210	16MJ-16FJX90-W/N

JIC FJX-MJ

JIC 37° female swivel / male tube reducer



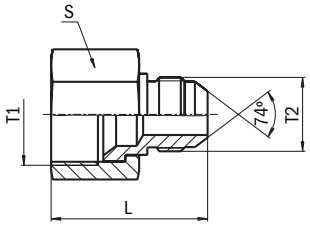

THREAD		LENGTH	HEX/FLATS	WORKING PRESSURE	ADAPTOR
T1	T2	L	S	WP	REF.
JIC F	JIC	mm	mm	bar	JIC
9/16"-18	7/16"-20	24.6	19.0	350	6FJX-4MJ
3/4"-16	9/16"-18	25.5	22.0	310	8FJX-6MJ
7/8"-14	7/16"-20	26.1	27.0	240	10FJX-4MJ
7/8"-14	9/16"-18	28.5	27.0	240	10FJX-6MJ
7/8"-14	3/4"-16	29.5	27.0	240	10FJX-8MJ
1.1/16"-12	7/16"-20	27.7	32.0	240	12FJX-4MJ
1.1/16"-12	3/4"-16	30.4	32.0	240	12FJX-8MJ
1.1/16"-12	7/8"-14	32.8	32.0	240	12FJX-10MJ
1.5/16"-12	9/16"-18	30.0	41.0	210	16FJX-6MJ
1.5/16"-12	7/8"-14	34.6	41.0	210	16FJX-10MJ
1.5/16"-12	1.1/16"-12	37.3	41.0	210	16FJX-12MJ
1.7/8"-12	1.5/16"-12	42.0	60.0	140	24FJX-16MJ

JIC FJX-MBSPPCOR

JIC 37° female swivel / male BSPP with O-Ring and retaining ring



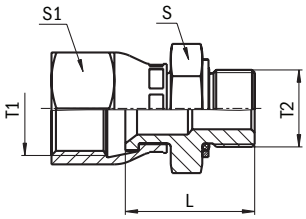

THREAD		LENGTH	HEX/FLATS		WORKING PRESSURE	ADAPTOR
T1	T2	L	S	S1	WP	REF.
JIC F	BSPP	mm	mm	mm	bar	JIC
7/16"-20	1/8"-28	33.5	14.0	14.0	200	4FJX-2MBSPPCOR
7/16"-20	1/4"-19	39.0	19.0	17.0	200	4FJX-4MBSPPCOR
1/2"-20	1/8"-28	24.0	17.0	17.0	200	5FJX-2MBSPPCOR
9/16"-18	1/4"-19	42.0	19.0	19.0	200	6FJX-4MBSPPCOR
9/16"-18	3/8"-19	42.0	22.0	19.0	200	6FJX-6MBSPPCOR
3/4"-16	3/8"-19	43.5	22.0	24.0	200	8FJX-6MBSPPCOR
3/4"-16	1/2"-14	47.0	27.0	24.0	200	8FJX-8MBSPPCOR
7/8"-14	3/8"-19	47.0	24.0	27.0	200	10FJX-6MBSPPCOR
7/8"-14	1/2"-14	50.0	27.0	27.0	200	10FJX-8MBSPPCOR
7/8"-14	3/4"-14	38.0	36.0	27.0	200	10FJX-12MBSPPCOR
1.1/16"-12	1/2"-14	52.5	30.0	32.0	200	12FJX-8MBSPPCOR
1.1/16"-12	3/4"-14	55.5	36.0	32.0	200	12FJX-12MBSPPCOR
1.5/16"-12	1"-11	60.5	46.0	41.0	200	16FJX-16MBSPPCOR
1.5/8"-12	1.1/4"-11	67.0	50.0	50.0	160	20FJX-20MBSPPCOR
1.7/8"-12	1.1/2"-11	76.0	55.0	55.0	140	24FJX-24MBSPPCOR

JIC FJX-MBSPPWD-W/N

JIC 37° female swivel with wire-on-nut / male BSPP with captive seal



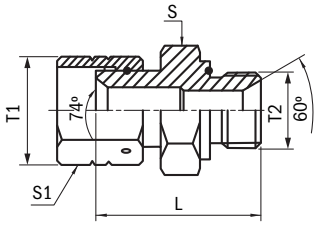

THREAD		LENGTH	HEX/FLATS		WORKING PRESSURE	ADAPTOR
T1	T2	L	S	S1	WP	REF.
JIC F	BSPP	mm	mm	mm	bar	JIC
9/16"-18	3/8"-19	33.5	22.0	19.0	315	6FJX-6MBSPPWD-W/N
9/16"-18	1/2"-14	36.5	27.0	19.0	250	6FJX-8MBSPPWD-W/N
3/4"-16	1/4"-19	32.0	19.0	22.0	310	8FJX-4MBSPPWD-W/N
3/4"-16	1/2"-14	37.5	27.0	22.0	250	8FJX-8MBSPPWD-W/N
1.5/16"-12	1"-11	48.5	41.0	41.0	210	16FJX-16MBSPPWD-W/N

JIC FJX-FJX90-W/N

JIC 37° female swivel / female swivel 90° elbow with wire-on-nut



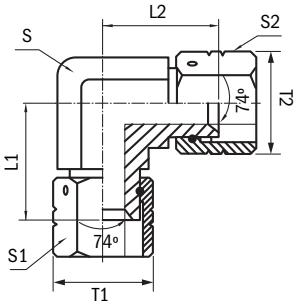

THREAD		LENGTH		HEX/FLATS		WORKING PRESSURE	ADAPTOR
T1	T2	L1	L2	S	S1 & S2	WP	REF.
JIC F	JIC F	mm	mm	mm	mm	bar	JIC
¾"-16	¾"-16	24.3	24.3	19.0	22.0	310	8FJX-8FJX90-W/N

JIC MJ-MJ-MJ

JIC 37° male / male / male "T"



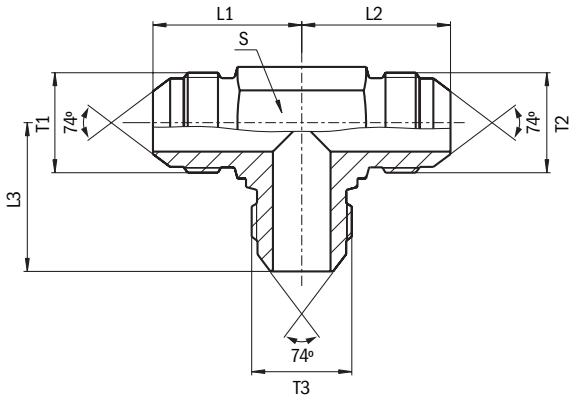

THREAD			LENGTH			HEX/ FLATS	WORKING PRESSURE	ADAPTOR
T1	T2	T3	L1	L2	L3	S	WP	REF.
JIC	JIC	JIC	mm	mm	mm	mm	bar	JIC
7/16"-20	7/16"-20	7/16"-20	22.6	22.6	22.6	11.0	350	4MJ-4MJ-4MJ
½"-20	½"-20	½"-20	24.1	24.1	24.1	14.0	350	5MJ-5MJ-5MJ
9/16"-18	9/16"-18	9/16"-18	26.9	26.9	26.9	14.0	350	6MJ-6MJ-6MJ
¾"-16	¾"-16	¾"-16	31.8	31.8	31.8	19.0	310	8MJ-8MJ-8MJ
7/8"-14	7/8"-14	7/8"-14	36.8	36.8	36.8	22.0	240	10MJ-10MJ-10MJ
1.1/16"-12	1.1/16"-12	1.1/16"-12	42.2	42.2	42.2	27.0	240	12MJ-12MJ-12MJ
1.5/16"-12	1.5/16"-12	1.5/16"-12	46.0	46.0	46.0	33.0	210	16MJ-16MJ-16MJ

JIC MJ-MJBKHD-MJ

JIC 37° male / male bulkhead / male "run T"



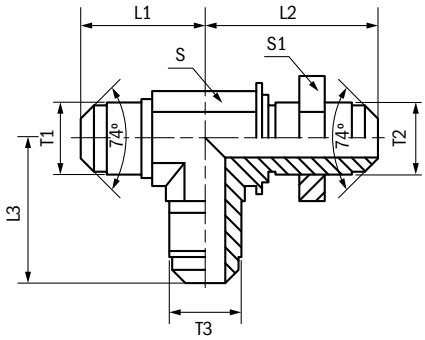

THREAD			LENGTH			HEX/FLATS		WORKING PRESSURE	ADAPTOR
T1	T2	T3	L1	L2	L3	S	S1	WP	REF.
JIC	JIC	JIC	mm	mm	mm	mm	mm	bar	JIC
¾"-16	¾"-16	¾"-16	34.5	53.6	34.5	19.0	24.0	310	8MJ-8MJBKHD-8MJ

JIC MJ-MJ-FJX

JIC 37° male / male / female swivel "branch T"



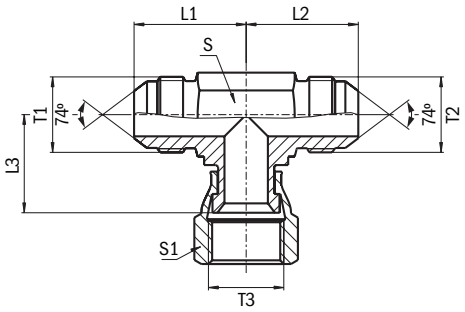

THREAD			LENGTH			HEX/FLATS		WORKING PRESSURE	ADAPTOR
T1	T2	T3	L1	L2	L3	S	S1	WP	REF.
JIC	JIC	JIC F	mm	mm	mm	mm	mm	bar	JIC
7/16"-20	7/16"-20	7/16"-20	22.6	22.6	16.7	11.0	14.0	350	4MJ-4MJ-4FJX
½"-20	½"-20	½"-20	24.1	24.1	17.4	14.0	17.0	350	5MJ-5MJ-5FJX
9/16"-18	9/16"-18	9/16"-18	26.9	26.9	22.2	14.0	19.0	350	6MJ-6MJ-6FJX
¾"-16	¾"-16	¾"-16	31.8	31.8	24.3	19.0	22.0	310	8MJ-8MJ-8FJX
7/8"-14	7/8"-14	7/8"-14	36.8	36.8	28.5	22.0	27.0	240	10MJ-10MJ-10FJX
1.1/16"-12	1.1/16"-12	1.1/16"-12	42.2	42.2	30.2	27.0	32.0	240	12MJ-12MJ-12FJX
1.5/16"-12	1.5/16"-12	1.5/16"-12	46.0	46.0	35.7	33.0	41.0	210	16MJ-16MJ-16FJX

JIC MJ-MJ-FJX-W/N

JIC 37° male / male / female swivel with wire-on-nut "branch T"



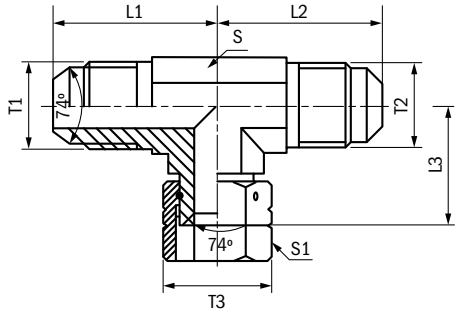

THREAD			LENGTH			HEX/FLATS		WORKING PRESSURE	ADAPTOR
T1	T2	T3	L1	L2	L3	S	S1	WP	REF.
JIC	JIC	JIC F	mm	mm	mm	mm	mm	bar	JIC
9/16"-18	9/16"-18	9/16"-18	26.9	26.9	22.2	14.0	19.0	350	6MJ-6MJ-6FJX-W/N
3/4"-16	3/4"-16	3/4"-16	31.8	31.8	24.3	19.0	22.0	310	8MJ-8MJ-8FJX-W/N
7/8"-14	9/16"-18	7/8"-14	36.8	33.5	28.5	22.0	27.0	240	10MJ-6MJ-10FJX-W/N
7/8"-14	7/8"-14	7/8"-14	36.8	36.8	28.5	22.0	27.0	240	10MJ-10MJ-10FJX-W/N

JIC MJ-FJX-MJ

JIC 37° male / female swivel / male "run T"



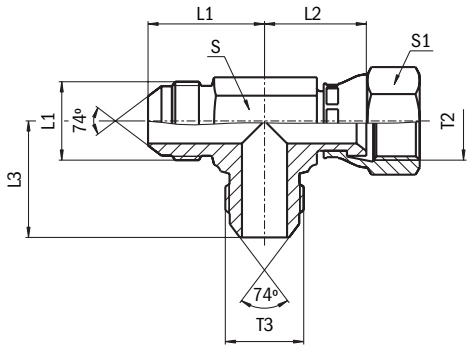

THREAD			LENGTH			HEX/FLATS		WORKING PRESSURE	ADAPTOR
T1	T2	T3	L1	L2	L3	S	S1	WP	REF.
JIC	JIC F	JIC	mm	mm	mm	mm	mm	bar	JIC
7/16"-20	7/16"-20	7/16"-20	22.6	26.6	22.6	11.0	14.0	350	4MJ-4FJX-4MJ
1/2"-20	1/2"-20	1/2"-20	24.1	17.4	24.1	14.0	17.0	350	5MJ-5FJX-5MJ
9/16"-18	9/16"-18	9/16"-18	26.9	22.2	26.9	14.0	19.0	350	6MJ-6FJX-6MJ
3/4"-16	3/4"-16	3/4"-16	31.8	24.3	31.8	19.0	22.0	310	8MJ-8FJX-8MJ
7/8"-14	7/8"-14	7/8"-14	36.8	28.6	36.8	22.0	27.0	240	10MJ-10FJX-10MJ
1.1/16"-12	1.1/16"-12	1.1/16"-12	42.2	30.2	42.2	27.0	32.0	240	12MJ-12FJX-12MJ
1.3/16"-12	1.3/16"-12	1.3/16"-12	45.7	35.7	45.7	31.0	36.0	210	14MJ-14FJX-14MJ
1.5/16"-12	1.5/16"-12	1.5/16"-12	46.0	35.7	46.0	31.0	41.0	210	16MJ-16FJX-16MJ
1.5/8"-12	1.5/8"-12	1.5/8"-12	52.3	42.8	52.3	41.0	50.0	170	20MJ-20FJX-20MJ

JIC MJ-FJX-MJ-W/N

JIC 37° male / female swivel
with wire-on nut / male "run T"



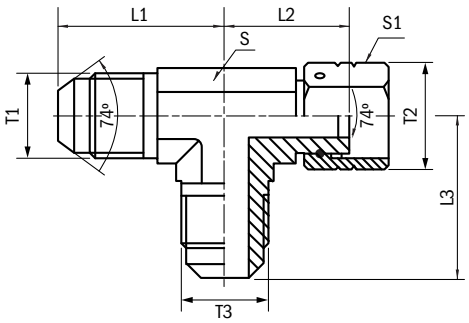

THREAD			LENGTH			HEX/FLATS		WORKING PRESSURE	ADAPTOR
T1	T2	T3	L1	L2	L3	S	S1	WP	REF.
JIC	JIC F	JIC	mm	mm	mm	mm	mm	bar	JIC
9/16"-18	9/16"-18	9/16"-18	26.9	22.2	26.9	14.0	19.0	350	6MJ-6FJX-6MJ-W/N
3/4"-16	3/4"-16	3/4"-16	31.8	24.3	31.8	19.0	22.0	310	8MJ-8FJX-8MJ-W/N
7/8"-14	7/8"-14	7/8"-14	36.8	28.5	36.8	22.0	27.0	240	10MJ-10FJX-10MJ-W/N
1.5/16"-12	1.5/16"-12	1.5/16"-12	46.0	35.7	46.0	33.0	41.0	210	16MJ-16FJX-16MJ-W/N

JIC MJ-MJ-MBSPPACOR

JIC 37° male / male / adjustable male BSPP
with O-Ring and retaining ring "branch T"



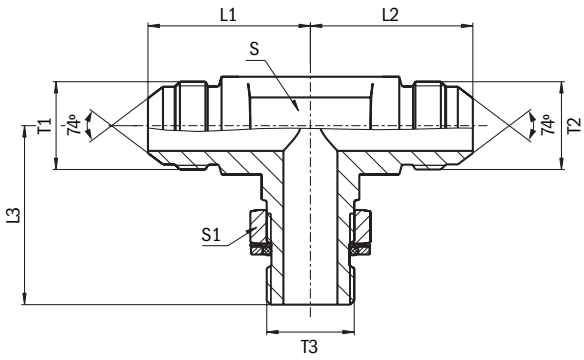

THREAD			LENGTH			HEX/FLATS		WORKING PRESSURE	ADAPTOR
T1	T2	T3	L1	L2	L3	S	S1	WP	REF.
JIC	JIC	BSPP	mm	mm	mm	mm	mm	bar	JIC
7/16"-20	7/16"-20	1/8"-28	22.5	22.5	26.0	11.0	14.0	200	4MJ-4MJ-2MBSPPACOR
9/16"-18	9/16"-18	1/4"-19	27.0	27.0	31.8	14.0	19.0	200	6MJ-6MJ-4MBSPPACOR
3/4"-16	3/4"-16	3/8"-19	31.5	31.5	36.5	19.0	22.0	200	8MJ-8MJ-6MBSPPACOR
3/4"-16	3/4"-16	1/2"-14	34.0	34.0	43.0	22.0	27.0	200	8MJ-8MJ-8MBSPPACOR
7/8"-14	7/8"-14	1/2"-14	36.5	36.5	43.0	22.0	27.0	200	10MJ-10MJ-8MBSPPACOR
1.1/16"-12	1.1/16"-12	3/4"-14	42.0	42.0	49.0	27.0	36.0	200	12MJ-12MJ-12MBSPPACOR
1.5/16"-12	1.5/16"-12	1"-11	46.0	46.0	52.0	33.0	41.0	200	16MJ-16MJ-16MBSPPACOR

JIC MJ-MBSPPACOR-MJ

JIC 37° male / adjustable male BSPP with O-Ring and retaining ring male “run T"



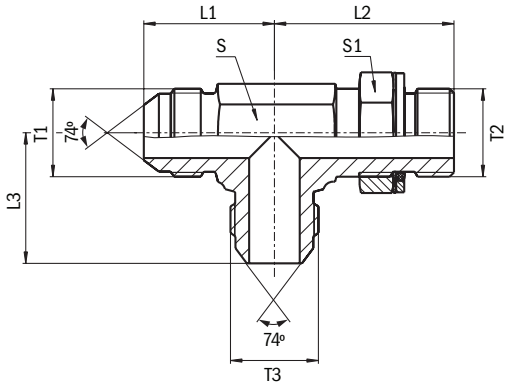

THREAD			LENGTH			HEX/FLATS		WORKING PRESSURE	ADAPTOR
T1	T2	T3	L1	L2	L3	S	S1	WP	REF.
JIC	BSPP	JIC	mm	mm	mm	mm	mm	bar	JIC
7/16”-20	1/8”-28	7/16”-20	22.5	26.0	22.5	11.0	14.0	200	4MJ-2MBSPPACOR-4MJ
9/16”-18	1/4”-19	9/16”-18	27.0	31.5	27.0	14.0	19.0	200	6MJ-4MBSPPACOR-6MJ
3/4”-16	3/8”-19	3/4”-16	31.5	36.5	31.5	19.0	22.0	200	8MJ-6MBSPPACOR-8MJ
7/8”-14	1/2”-14	7/8”-14	36.5	43.0	36.5	22.0	27.0	200	10MJ-8MBSPPACOR-10MJ
1.1/16”-12	3/4”-14	1.1/16”-12	42.0	49.0	42.0	27.0	36.0	200	12MJ-12MBSPPACOR-12MJ
1.5/16”-12	1”-11	1.5/16”-12	46.0	52.0	46.0	33.0	41.0	200	16MJ-16MBSPPACOR-16MJ

JIC MJ-MJ-MBA

JIC 37° male / male adjustable male SAE 'O' Ring boss "branch T"



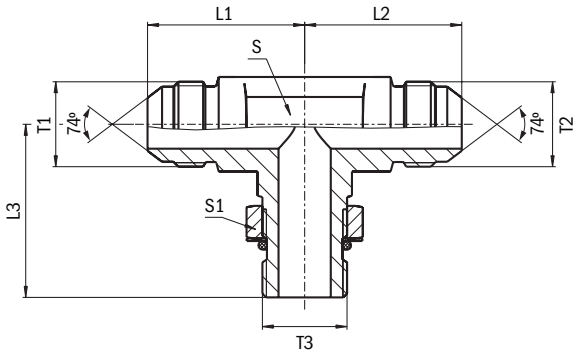

THREAD			LENGTH			HEX/FLATS		WORKING PRESSURE	ADAPTOR
T1	T2	T3	L1	L2	L3	S	S1	WP	REF.
JIC	JIC	SAE O	mm	mm	mm	mm	mm	bar	JIC
7/16”-20	7/16”-20	7/16”-20 UNF	22.6	22.6	26.2	11.0	14.0	315	4MJ-4MJ-4MBA
7/16”-20	7/16”-20	9/16”-18 UNF	26.7	26.7	31.8	14.0	19.0	315	4MJ-4MJ-6MBA
1/2”-20	1/2”-20	1/2”-20 UNF	24.1	24.1	28.7	14.0	17.0	315	5MJ-5MJ-5MBA
9/16”-18	9/16”-18	9/16”-18 UNF	26.9	26.9	31.8	14.0	19.0	315	6MJ-6MJ-6MBA
3/4”-16	3/4”-16	3/4”-16 UNF	31.8	31.8	36.8	19.0	22.0	310	8MJ-8MJ-8MBA
3/4”-16	3/4”-16	7/8”-14 UNF	33.8	33.8	43.2	22.0	27.0	250	8MJ-8MJ-10MBA
7/8”-14	7/8”-14	7/8”-14 UNF	36.8	36.8	43.1	22.0	27.0	240	10MJ-10MJ-10MBA
1.1/16”-12	1.1/16”-12	1.1/16”-12 UN	42.2	42.2	49.3	27.0	32.0	240	12MJ-12MJ-12MBA
1.5/16”-12	1.5/16”-12	1.5/16”-12 UN	46.0	46.0	52.1	33.0	41.0	200	16MJ-16MJ-16MBA

JIC MJ-MBA-MJ

JIC 37° male / adjustable male
SAE 'O' Ring boss / male "run T"



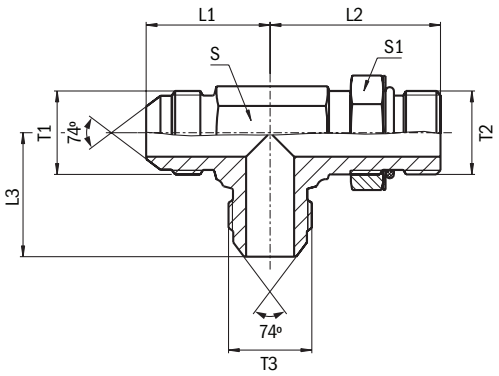

THREAD			LENGTH			HEX/FLATS		WORKING PRESSURE	ADAPTOR
T1	T2	T3	L1	L2	L3	S	S1	WP	REF.
JIC	SAE O	JIC	mm	mm	mm	mm	mm	bar	JIC
7/16"-20	7/16"-20 UNF	7/16"-20	22.6	26.2	22.6	11.0	14.0	315	4MJ-4MBA-4MJ
1/2"-20	1/2"-20 UNF	1/2"-20	24.1	28.7	24.1	14.0	17.0	315	5MJ-5MBA-5MJ
9/16"-18	9/16"-18 UNF	9/16"-18	26.9	31.8	26.9	14.0	19.0	315	6MJ-6MBA-6MJ
3/4"-16	3/4"-16 UNF	3/4"-16	31.8	36.8	31.8	19.0	22.0	310	8MJ-8MBA-8MJ
7/8"-14	7/8"-14 UNF	7/8"-14	36.8	43.2	36.8	22.0	27.0	240	10MJ-10MBA-10MJ
1.1/16"-12	1.1/16"-12 UN	1.1/16"-12	42.2	49.3	36.8	27.0	32.0	240	12MJ-12MBA-8MJ
1.1/16"-12	1.1/16"-12 UN	1.1/16"-12	42.2	49.3	42.2	27.0	32.0	240	12MJ-12MBA-12MJ
1.5/16"-12	1.5/16"-12 UN	1.5/16"-12	46.0	52.1	46.0	33.0	41.0	200	16MJ-16MBA-16MJ

JIC MJ-PLUG

JIC 37° male plug



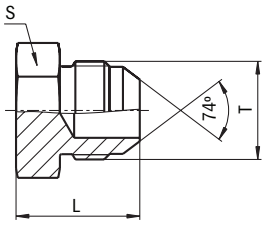

THREAD	LENGTH	HEX/FLATS	WORKING PRESSURE	ADAPTOR
T	L	S	WP	REF.
JIC	mm	mm	bar	JIC
7/16"-20	20.3	12.0	350	4MJ-PLUG
1/2"-20	20.3	14.0	350	5MJ-PLUG
9/16"-18	21.3	17.0	350	6MJ-PLUG
3/4"-16	23.9	19.0	310	8MJ-PLUG
7/8"-14	27.9	24.0	240	10MJ-PLUG
1.1/16"-12	32.5	27.0	240	12MJ-PLUG
1.5/16"-12	33.8	36.0	210	16MJ-PLUG

JIC FJ-CAP

JIC 37° female swivel cap



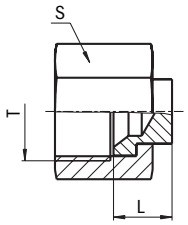

THREAD	LENGTH	HEX/FLATS	WORKING PRESSURE	ADAPTOR
T	L	S	WP	REF.
JIC F	mm	mm	bar	JIC
7/16"-20	8.7	14.0	350	4FJ-CAP
1/2"-20	10.3	17.0	350	5FJ-CAP
9/16"-18	11.9	19.0	350	6FJ-CAP
3/4"-16	13.5	22.0	310	8FJ-CAP
7/8"-14	13.5	27.0	240	10FJ-CAP
1.1/16"-12	16.7	32.0	240	12FJ-CAP
1.5/16"-12	15.9	41.0	210	16FJ-CAP

JIC FJ-NUT

JIC 37° female nut



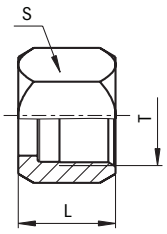

THREAD	LENGTH	HEX/FLATS	WORKING PRESSURE	ADAPTOR
T	L	S	WP	REF.
JIC F	mm	mm	bar	JIC
7/16"-20	15.8	14.0	350	4FJ-NUT
1/2"-20	17.3	17.0	350	5FJ-NUT
9/16"-18	18.5	19.0	350	6FJ-NUT
3/4"-16	21.6	22.0	310	8FJ-NUT
7/8"-14	24.9	27.0	240	10FJ-NUT
1.1/16"-12	26.2	32.0	240	12FJ-NUT
1.5/16"-12	28.7	41.0	210	16FJ-NUT
1.5/8"-12	31.2	50.0	170	20FJ-NUT
1.7/8"-12	36.1	60.0	140	24FJ-NUT

JIC-LOCKNUT

JIC locknut for bulkhead adaptor



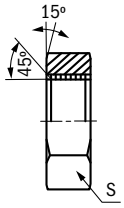

THREAD	HEX/FLATS	ADAPTOR
T	S	REF.
JIC	mm	JIC
9/16"-18	22.0	6JIC-LOCKNUT

JIC TS METRIC

JIC 37° tube end sleeve for metric tubes



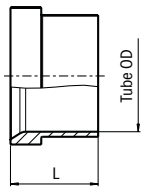

THREAD	LENGTH	WORKING PRESSURE	ADAPTOR
TUBE OD	L	WP	REF.
Metric	mm	bar	JIC
6	10.4	350	SLEEVE JIC 6TS METRIC
8	11.2	350	SLEEVE JIC 8TS METRIC
10	12.7	350	SLEEVE JIC 10TS METRIC
12	14.2	310	SLEEVE JIC 12TS METRIC
16	16.8	240	SLEEVE JIC 16TS METRIC
20	17.3	240	SLEEVE JIC 20TS METRIC
25	19.8	240	SLEEVE JIC 25TS METRIC
30	23.1	170	SLEEVE JIC 30TS METRIC
38	28.4	140	SLEEVE JIC 38TS METRIC

JIC TS IMPERIAL

JIC 37° tube end sleeve for imperial tubes



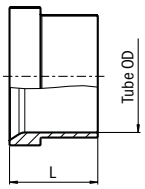

THREAD	LENGTH	WORKING PRESSURE	ADAPTOR
TUBE OD	L	WP	REF.
Metric	mm	bar	JIC
4	10.4	350	SLEEVE JIC TS04 IMPERIAL
5	11.2	350	SLEEVE JIC TS05 IMPERIAL
6	12.7	350	SLEEVE JIC TS06 IMPERIAL
8	14.2	310	SLEEVE JIC TS08 IMPERIAL
10	16.8	240	SLEEVE JIC TS10 IMPERIAL
12	17.3	240	SLEEVE JIC TS12 IMPERIAL
16	27.4	210	SLEEVE JIC TS16 IMPERIAL


31
32
33



DRIVEN BY POSSIBILITY™

ORFS ADAPTORS

ORFS MFFOR-MFFOR

SAE flat face O-Ring male / male



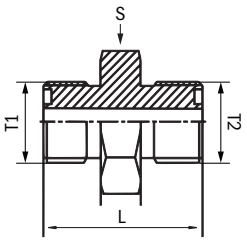

THREAD		LENGTH	HEX/FLATS	WORKING PRESSURE	ADAPTOR
T1	T2	L	S	WP	REF.
ORFS	ORFS	mm	mm	bar	ORFS
9/16"-18	9/16"-18	27.4	17.0	630	4MFFOR-4MFFOR
11/16"-16	9/16"-18	29.7	19.0	630	6MFFOR-4MFFOR
11/16"-16	11/16"-16	31.0	19.0	630	6MFFOR-6MFFOR
13/16"-16	11/16"-16	33.8	22.0	630	8MFFOR-6MFFOR
13/16"-16	13/16"-16	35.5	22.0	630	8MFFOR-8MFFOR
1"-14	13/16"-16	39.9	27.0	400	10MFFOR-8MFFOR
1"-14	1"-14	42.5	27.0	400	10MFFOR-10MFFOR
1.3/16"-12	13/16"-16	43.0	32.0	400	12MFFOR-8MFFOR
1.3/16"-12	1"-14	45.7	32.0	400	12MFFOR-10MFFOR
1.3/16"-12	1.3/16"-12	47.2	32.0	400	12MFFOR-12MFFOR
1.7/16"-12	1.3/16"-12	48.8	41.0	400	16MFFOR-12MFFOR
1.7/16"-12	1.7/16"-12	49.3	41.0	400	16MFFOR-16MFFOR
1.11/16"-12	1.7/16"-12	51.3	46.0	250	20MFFOR-16MFFOR
1.11/16"-12	1.11/16"-12	51.3	46.0	250	20MFFOR-20MFFOR
2"-12	2"-12	53.0	55.0	250	24MFFOR-24MFFOR

ORFS MFFOR-MFFOR90

SAE flat face O-Ring male / male 90° elbow



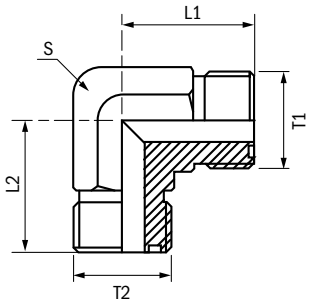

THREAD		LENGTH		HEX/FLATS	WORKING PRESSURE	ADAPTOR
T1	T2	L1	L2	S	WP	REF.
ORFS	ORFS	mm	mm	mm	bar	ORFS
9/16"-18	9/16"-18	21.6	21.6	14.0	630	4MFFOR-4MFFOR90
11/16"-16	11/16"-16	24.9	24.9	19.0	630	6MFFOR-6MFFOR90
13/16"-16	13/16"-16	28.0	28.0	19.0	630	8MFFOR-8MFFOR90
1"-14	1"-14	33.3	33.3	27.0	400	10MFFOR-10MFFOR90
1.3/16"-12	13/16"-16	37.5	37.5	30.0	400	12MFFOR-12MFFOR90
1.7/16"-12	1.7/16"-12	41.7	41.7	36.0	400	16MFFOR-16MFFOR90
1.11/16"-12	1.11/16"-12	44.7	44.7	41.0	250	20MFFOR-20MFFOR90
2"-12	2"-12	48.8	48.8	50.0	250	24MFFOR-24MFFOR90

ORFS MFFOR-MFFORBKHD

SAE flat face O-Ring male / male straight bulkhead



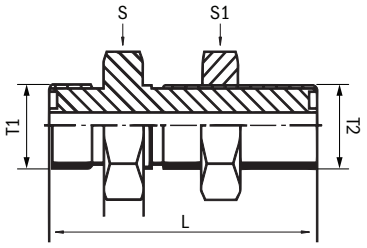

THREAD		LENGTH	HEX/FLATS	WORKING PRESSURE	ADAPTOR
T1	T2	L	S & S1	WP	REF.
ORFS	ORFS	mm	mm	bar	ORFS
9/16"-18	9/16"-18	48.3	22.0	630	4MFFOR-4MFFORBKHD
11/16"-16	11/16"-16	53.1	27.0	630	6MFFOR-6MFFORBKHD
13/16"-16	13/16"-16	58.4	30.0	630	8MFFOR-8MFFORBKHD
1"-14	1"-14	66.6	36.0	400	10MFFOR-10MFFORBKHD
1.3/16"-12	1.3/16"-12	69.1	41.0	400	12MFFOR-12MFFORBKHD
1.7/16"-12	1.7/16"-12	70.1	46.0	400	16MFFOR-16MFFORBKHD
1.11/16"-12	1.11/16"-12	70.1	50.0	250	20MFFOR-20MFFORBKHD
2"-12	2"-12	70.1	60.0	250	24MFFOR-24MFFORBKHD

ORFS MFFOR-MFFORBKHD90

SAE flat face O-Ring male / male bulkhead 90° union elbow with lock nut



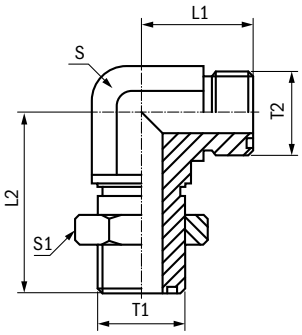

THREAD		LENGTH		HEX/FLATS		WORKING PRESSURE	ADAPTOR
T1	T2	L1	L2	S	S1	WP	REF.
ORFS	ORFS	mm	mm	mm	mm	bar	ORFS
9/16"-18	9/16"-18	22.6	47.0	14.0	22.0	630	4MFFOR-4MFFORBKHD90
11/16"-16	11/16"-16	26.0	52.0	19.0	27.0	630	6MFFOR-6MFFORBKHD90
13/16"-16	13/16"-16	29.0	55.4	19.0	30.0	630	8MFFOR-8MFFORBKHD90
1"-14	1"-14	34.5	63.0	27.0	36.0	400	10MFFOR-10MFFORBKHD90
1.3/16"-12	1.3/16"-12	38.5	67.2	30.0	41.0	400	12MFFOR-12MFFORBKHD90
1.7/16"-12	1.7/16"-12	42.4	71.1	36.0	46.0	400	16MFFOR-16MFFORBKHD90
1.11/16"-12	1.11/16"-12	45.5	75.4	41.0	50.0	250	20MFFOR-20MFFORBKHD90
2"-12	2"-12	49.5	79.5	48.0	60.0	250	24MFFOR-24MFFORBKHD90

ORFS MFFOR-MBSPP

SAE flat face O-Ring male / male BSPP 60°



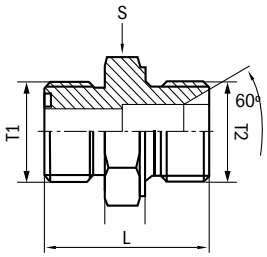

THREAD		LENGTH	HEX/FLATS	WORKING PRESSURE	ADAPTOR
T1	T2	L	S	WP	REF.
ORFS	BSPP	mm	mm	bar	ORFS
9/16"-18	1/8"-28	24.5	17.0	350	4MFFOR-2MBSPP
9/16"-18	1/4"-19	29.0	19.0	350	4MFFOR-4MBSPP
9/16"-18	3/8"-19	29.5	22.0	350	4MFFOR-6MBSPP
9/16"-18	1/2"-14	31.8	27.0	315	4MFFOR-8MBSPP
11/16"-16	1/8"-28	28.0	19.0	350	6MFFOR-2MBSPP
11/16"-16	1/4"-19	30.0	19.0	350	6MFFOR-4MBSPP
11/16"-16	3/8"-19	32.0	22.0	350	6MFFOR-6MBSPP
11/16"-16	1/2"-14	35.0	27.0	315	6MFFOR-8MBSPP
11/16"-16	3/4"-14	39.0	32.0	250	6MFFOR-12MBSPP
13/16"-16	1/4"-19	32.5	22.0	350	8MFFOR-4MBSPP
13/16"-16	3/8"-19	32.5	22.0	350	8MFFOR-6MBSPP
13/16"-16	1/2"-14	36.5	27.0	315	8MFFOR-8MBSPP
13/16"-16	3/4"-14	40.5	32.0	250	8MFFOR-12MBSPP
1"-14	3/8"-19	36.0	27.0	350	10MFFOR-6MBSPP
1"-14	1/2"-14	37.8	27.0	315	10MFFOR-8MBSPP
1"-14	5/8"-14	43.5	30.0	315	10MFFOR-10MBSPP
1"-14	3/4"-14	41.0	32.0	250	10MFFOR-12MBSPP
1"-14	1"-11	49.0	41.0	200	10MFFOR-16MBSPP
1.3/16"-12	1/2"-14	44.0	32.0	315	12MFFOR-8MBSPP
1.3/16"-12	5/8"-14	45.0	32.0	315	12MFFOR-10MBSPP
1.3/16"-12	3/4"-14	45.0	32.0	250	12MFFOR-12MBSPP
1.3/16"-12	1"-11	47.0	41.0	200	12MFFOR-16MBSPP
1.3/16"-12	1.1/4"-11	54.0	50.0	160	12MFFOR-20MBSPP
1.7/16"-12	3/4"-14	44.5	41.0	250	16MFFOR-12MBSPP
1.7/16"-12	1"-11	50.0	41.0	200	16MFFOR-16MBSPP
1.7/16"-12	1.1/4"-11	54.0	50.0	160	16MFFOR-20MBSPP
1.7/16"-12	1.1/2"-11	54.5	55.0	125	16MFFOR-24MBSPP
1.11/16"-12	1"-11	50.0	46.0	200	20MFFOR-16MBSPP
1.11/16"-12	1.1/4"-11	52.0	50.0	160	20MFFOR-20MBSPP
1.11/16"-12	1.1/2"-11	54.5	55.0	125	20MFFOR-24MBSPP
2"-12	1-1/2"-11	54.5	55.0	125	24MFFOR-24MBSPP

ORFS MFFOR-MBSPPCOR

SAE flat face O-Ring male / male BSPP with O-Ring and retaining ring



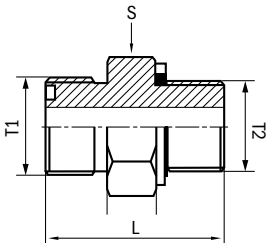

THREAD		LENGTH	HEX/FLATS	WORKING PRESSURE	ADAPTOR
T1	T2	L	S	WP	REF.
ORFS	BSPP	mm	mm	bar	ORFS
9/16"-18	1/8"-28	25.0	17.0	200	4MFFOR-2MBSPPCOR
9/16"-18	1/4"-19	30.0	19.0	200	4MFFOR-4MBSPPCOR
9/16"-18	3/8"-19	31.0	22.0	200	4MFFOR-6MBSPPCOR
9/16"-18	1/2"-14	34.5	30.0	200	4MFFOR-8MBSPPCOR
11/16"-16	1/8"-28	28.5	19.0	630	6MFFOR-2MBSPPCOR
11/16"-16	1/4"-19	31.5	19.0	200	6MFFOR-4MBSPPCOR
11/16"-16	3/8"-19	32.5	22.0	200	6MFFOR-6MBSPPCOR
11/16"-16	1/2"-14	36.0	30.0	200	6MFFOR-8MBSPPCOR
11/16"-16	3/4"-14	36.5	36.0	400	6MFFOR-12MBSPPCOR
13/16"-16	1/4"-19	33.5	22.0	200	8MFFOR-4MBSPPCOR
13/16"-16	3/8"-19	33.5	22.0	200	8MFFOR-6MBSPPCOR
13/16"-16	1/2"-14	37.0	30.0	200	8MFFOR-8MBSPPCOR
13/16"-16	3/4"-14	38.0	36.0	200	8MFFOR-12MBSPPCOR
1"-14	3/8"-19	37.0	27.0	200	10MFFOR-6MBSPPCOR
1"-14	1/2"-14	39.5	30.0	200	10MFFOR-8MBSPPCOR
1"-14	5/8"-14	41.5	32.0	200	10MFFOR-10MBSPPCOR
1"-14	3/4"-14	43.5	36.0	200	10MFFOR-12MBSPPCOR
1"-14	1"-11	46.0	41.0	400	10MFFOR-16MBSPPCOR
1.3/16"-12	1/2"-14	44.0	32.0	200	12MFFOR-8MBSPPCOR
1.3/16"-12	3/4"-14	45.0	36.0	200	12MFFOR-12MBSPPCOR
1.3/16"-12	1"-11	47.5	41.0	200	12MFFOR-16MBSPPCOR
1.3/16"-12	1.1/4"-11	51.0	50.0	250	12MFFOR-20MBSPPCOR
1.7/16"-12	3/4"-14	43.0	36.0	200	16MFFOR-12MBSPPCOR
1.7/16"-12	1"-11	48.0	46.0	200	16MFFOR-16MBSPPCOR
1.7/16"-12	1.1/4"-11	51.5	50.0	160	16MFFOR-20MBSPPCOR
1.7/16"-12	1.1/2"-11	50.0	55.0	250	16MFFOR-24MBSPPCOR
1.11/16"-12	1"-11	51.5	50.0	200	20MFFOR-16MBSPPCOR
1.11/16"-12	1.1/4"-11	51.5	50.0	160	20MFFOR-20MBSPPCOR
1.11/16"-12	1.1/2"-11	50.0	55.0	250	20MFFOR-24MBSPPCOR
2"-12	1.1/2"-11	50.0	55.0	160	24MFFOR-24MBSPPCOR

ORFS MFFOR-MBSPPACOR90

SAE flat face O-Ring male / male BSPP 90° elbow with O-Ring and retaining ring



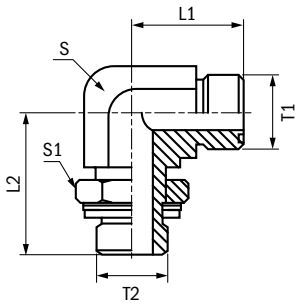

THREAD		LENGTH		HEX/FLATS		WORKING PRESSURE	ADAPTOR
T1	T2	L1	L2	S	S1	WP	REF.
ORFS	BSPP	mm	mm	mm	mm	bar	ORFS
9/16"-18	1/8"-28	21.5	30.0	14.0	14.0	200	4MFFOR-2MBSPPACOR90
9/16"-18	1/4"-19	23.5	35.0	14.0	19.0	200	4MFFOR-4MBSPPACOR90
9/16"-18	3/8"-19	25.0	38.0	19.0	22.0	200	4MFFOR-6MBSPPACOR90
11/16"-16	1/4"-19	25.0	36.0	19.0	19.0	200	6MFFOR-4MBSPPACOR90
11/16"-16	3/8"-19	26.5	38.0	19.0	22.0	200	6MFFOR-6MBSPPACOR90
11/16"-16	1/2"-14	29.5	48.0	22.0	27.0	200	6MFFOR-8MBSPPACOR90
13/16"-16	1/4"-19	28.0	35.0	19.0	19.0	200	8MFFOR-4MBSPPACOR90
13/16"-16	3/8"-19	28.0	36.5	19.0	22.0	200	8MFFOR-6MBSPPACOR90
13/16"-16	1/2"-14	31.0	48.0	27.0	27.0	200	8MFFOR-8MBSPPACOR90
13/16"-16	3/4"-14	30.7	49.0	27.0	36.0	200	8MFFOR-12MBSPPACOR90
1"-14	3/8"-19	35.5	43.0	27.0	22.0	200	10MFFOR-6MBSPPACOR90
1"-14	1/2"-14	33.5	48.0	27.0	27.0	200	10MFFOR-8MBSPPACOR90
1"-14	3/4"-14	36.0	51.5	30.0	36.0	200	10MFFOR-12MBSPPACOR90
1"-14	1"-11	41.2	58.0	36.0	41.0	200	10MFFOR-16MBSPPACOR90
1.3/16"-12	1/2"-14	37.5	49.0	30.0	27.0	200	12MFFOR-8MBSPPACOR90
1.3/16"-12	3/4"-14	37.5	51.5	30.0	36.0	200	12MFFOR-12MBSPPACOR90
1.3/16"-12	1"-11	41.5	58.0	36.0	41.0	200	12MFFOR-16MBSPPACOR90
1.7/16"-12	3/4"-14	42.0	57.5	36.0	36.0	200	16MFFOR-12MBSPPACOR90
1.7/16"-12	1"-11	42.0	58.0	36.0	41.0	200	16MFFOR-16MBSPPACOR90
1.7/16"-12	1.1/4"-11	44.5	60.5	41.0	50.0	160	16MFFOR-20MBSPPACOR90
1.11/16"-12	1"-11	44.7	60.5	41.0	41.0	200	20MFFOR-16MBSPPACOR90
1.11/16"-12	1.1/4"-11	44.7	60.5	41.0	50.0	160	20MFFOR-20MBSPPACOR90
1.11/16"-12	1.1/2"-11	49.0	64.5	48.0	55.0	160	20MFFOR-24MBSPPACOR90
2"-12	1.1/2"-11	49.0	64.5	48.0	55.0	160	24MFFOR-24MBSPPACOR90

ORFS MFFOR-MBSPPWD

SAE flat face O-Ring male / male BSPP with captive seal



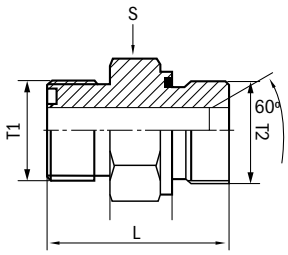

THREAD		LENGTH	HEX/FLATS	WORKING PRESSURE	ADAPTOR
T1	T2	L	S	WP	REF.
ORFS	BSPP	mm	mm	bar	ORFS
9/16"-18	1/8"-28	26.0	17.0	630	4MFFOR-2MBSPPWD
9/16"-18	1/4"-19	31.0	19.0	630	4MFFOR-4MBSPPWD
9/16"-18	3/8"-19	31.8	22.0	630	4MFFOR-6MBSPPWD
9/16"-18	1/2"-14	38.0	27.0	400	4MFFOR-8MBSPPWD
11/16"-16	1/8"-28	28.0	19.0	630	6MFFOR-2MBSPPWD
11/16"-16	1/4"-19	32.5	19.0	630	6MFFOR-4MBSPPWD
11/16"-16	3/8"-19	33.5	22.0	630	6MFFOR-6MBSPPWD
11/16"-16	1/2"-14	38.5	27.0	400	6MFFOR-8MBSPPWD
11/16"-16	3/4"-14	40.5	32.0	400	6MFFOR-12MBSPPWD
13/16"-16	1/4"-19	34.5	22.0	630	8MFFOR-4MBSPPWD
13/16"-16	3/8"-19	35.3	22.0	630	8MFFOR-6MBSPPWD
13/16"-16	1/2"-14	39.0	27.0	400	8MFFOR-8MBSPPWD
13/16"-16	3/4"-14	41.8	32.0	400	8MFFOR-12MBSPPWD
1"-14	3/8"-19	38.5	27.0	400	10MFFOR-6MBSPPWD
1"-14	1/2"-14	41.0	27.0	400	10MFFOR-8MBSPPWD
1"-14	5/8"-14	41.5	30.0	400	10MFFOR-10MBSPPWD
1"-14	3/4"-14	45.0	32.0	400	10MFFOR-12MBSPPWD
1"-14	1"-11	47.5	41.0	400	10MFFOR-16MBSPPWD
1.3/16"-12	1/2"-14	44.5	32.0	400	12MFFOR-8MBSPPWD
1.3/16"-12	3/4"-14	46.5	32.0	400	12MFFOR-12MBSPPWD
1.3/16"-12	1"-11	49.0	41.0	400	12MFFOR-16MBSPPWD
1.3/16"-12	1.1/4"-11	53.5	50.0	250	12MFFOR-20MBSPPWD
1.7/16"-12	3/4"-14	47.5	41.0	400	16MFFOR-12MBSPPWD
1.7/16"-12	1"-11	50.0	41.0	400	16MFFOR-16MBSPPWD
1.7/16"-12	1.1/4"-11	53.5	50.0	250	16MFFOR-20MBSPPWD
1.7/16"-12	1.1/2"-11	58.0	55.0	250	16MFFOR-24MBSPPWD
1.11/16"-12	1"-11	52.0	46.0	250	20MFFOR-16MBSPPWD
1.11/16"-12	1.1/4"-11	55.5	50.0	250	20MFFOR-20MBSPPWD
1.11/16"-12	1.1/2"-11	57.6	55.0	250	20MFFOR-24MBSPPWD
2"-12	1.1/2"-11	57.6	55.0	250	24MFFOR-24MBSPPWD

ORFS MFFOR-MJ

SAE flat face O-Ring male / male JIC 37°



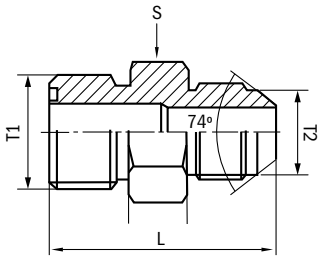

THREAD		LENGTH	HEX/FLATS	WORKING PRESSURE	ADAPTOR
T1	T2	L	S	WP	REF.
ORFS	JIC	mm	mm	bar	ORFS
9/16"-18	7/16"-20	31.7	17.0	350	4MFFOR-4MJ
11/16"-16	9/16"-18	34.0	19.0	350	6MFFOR-6MJ
13/16"-16	3/4"-16	39.4	22.0	310	8MFFOR-8MJ
1"-14	7/8"-14	46.5	27.0	240	10MFFOR-10MJ
1.3/16"-12	1.1/16"-12	52.1	32.0	240	12MFFOR-12MJ
1.7/16"-12	1.5/16"-12	54.9	41.0	210	16MFFOR-16MJ
1.11/16"-12	1.5/8"-12	58.2	46.0	170	20MFFOR-20MJ
2"-12	1.7/8"-12	63.0	55.0	140	24MFFOR-24MJ

ORFS MFFOR-MB

SAE flat face O-Ring male /
male SAE 'O' Ring boss



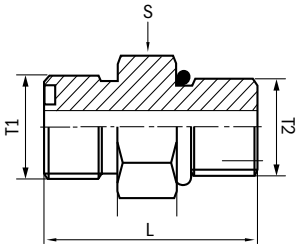

THREAD		LENGTH	HEX/FLATS	WORKING PRESSURE	ADAPTOR
T1	T2	L	S	WP	REF.
ORFS	SAE O	mm	mm	bar	ORFS
9/16"-18	7/16"-20 UNF	28.8	17.0	630	4MFFOR-4MB
9/16"-18	1/2"-20 UNF	29.0	17.0	630	4MFFOR-5MB
9/16"-18	9/16"-18 UNF	30.5	19.0	630	4MFFOR-6MB
9/16"-18	3/4"-16 UNF	33.5	22.0	630	4MFFOR-8MB
11/16"-16	7/16"-20 UNF	34.1	19.0	630	6MFFOR-4MB
11/16"-16	1/2"-20 UNF	30.8	19.0	630	6MFFOR-5MB
11/16"-16	9/16"-18 UNF	32.0	19.0	630	6MFFOR-6MB
11/16"-16	3/4"-16 UNF	35.1	22.0	630	6MFFOR-8MB
11/16"-16	7/8"-14 UNF	38.8	27.0	630	6MFFOR-10MB
11/16"-16	1.1/16"-12 UN	42.8	32.0	400	6MFFOR-12MB
13/16"-16	9/16"-18 UNF	37.4	22.0	400	8MFFOR-6MB
13/16"-16	3/4"-16 UNF	36.6	22.0	400	8MFFOR-8MB
13/16"-16	7/8"-14 UNF	40.5	27.0	400	8MFFOR-10MB
13/16"-16	1.1/16"-12 UN	45.4	32.0	400	8MFFOR-12MB
13/16"-16	1.5/16"-12 UN	45.6	41.0	400	8MFFOR-16MB
1"-14	3/4"-16 UNF	45.2	27.0	400	10MFFOR-8MB
1"-14	7/8"-14 UNF	43.0	27.0	400	10MFFOR-10MB
1"-14	1.1/16"-12 UN	47.2	32.0	400	10MFFOR-12MB
1.3/16"-12	3/4"-16 UNF	48.5	32.0	400	12MFFOR-8MB
1.3/16"-12	7/8"-14 UNF	50.6	32.0	400	12MFFOR-10MB
1.3/16"-12	1.1/16"-12 UN	48.6	32.0	400	12MFFOR-12MB
1.3/16"-12	1.5/16"-12 UN	49.5	41.0	400	12MFFOR-16MB
1.7/16"-12	1.1/16"-12 UN	54.4	41.0	400	16MFFOR-12MB
1.7/16"-12	1.5/16"-12 UN	50.3	41.0	400	16MFFOR-16MB
1.7/16"-12	1.5/8"-12 UN	52.5	50.0	250	16MFFOR-20MB
1.11/16"-12	1.5/16"-12 UN	57.9	46.0	250	20MFFOR-16MB
1.11/16"-12	1.5/8"-12 UN	52.5	50.0	250	20MFFOR-20MB
1.11/16"-12	1.7/8"-12 UN	54.0	55.0	250	20MFFOR-24MB
2"-12	1.5/8"-12 UN	59.6	55.0	250	24MFFOR-20MB
2"-12	1.7/8"-12 UN	54.1	55.0	250	24MFFOR-24MB
2"-12	2.1/2 -12 UN	54.2	70.0	125	24MFFOR-32MB

ORFS MFFOR-MBA90

SAE flat face O-Ring male /
male SAE 'O' Ring boss 90° elbow



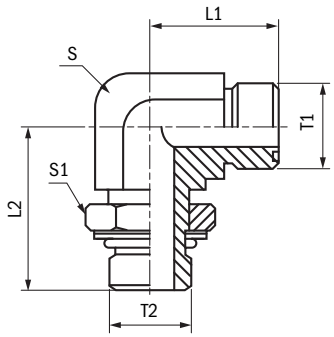

THREAD		LENGTH		HEX/FLATS		WORKING PRESSURE	ADAPTOR
T1	T2	L1	L2	S	S1	WP	REF.
ORFS	SAE O	mm	mm	mm	mm	bar	ORFS
9/16"-18	7/16"-20 UNF	21.5	32.7	14.0	17.0	630	4MFFOR-4MBA90
9/16"-18	9/16"-18 UNF	23.4	36.8	19.0	19.0	630	4MFFOR-6MBA90
9/16"-18	3/4"-16 UNF	24.6	40.6	19.0	24.0	630	4MFFOR-8MBA90
11/16"-16	7/16"-20 UNF	25.0	35.0	19.0	17.0	630	6MFFOR-4MBA90
11/16"-16	9/16"-18 UNF	24.9	36.8	19.0	19.0	630	6MFFOR-6MBA90
11/16"-16	3/4"-16 UNF	26.5	40.6	19.0	24.0	630	6MFFOR-8MBA90
11/16"-16	7/8"-14 UNF	30.0	50.0	27.0	27.0	630	6MFFOR-10MBA90
11/16"-16	1 1/16"-12 UN	31.8	55.1	30.0	36.0	400	6MFFOR-12MBA90
13/16"-16	9/16"-18 UNF	28.0	36.6	19.0	19.0	630	8MFFOR-6MBA90
13/16"-16	3/4"-16 UNF	28.0	40.6	19.0	24.0	630	8MFFOR-8MBA90
13/16"-16	7/8"-14 UNF	31.5	50.0	27.0	27.0	630	8MFFOR-10MBA90
13/16"-16	1 1/16"-12 UN	34.0	55.0	30.0	36.0	400	8MFFOR-12MBA90
1"-14	3/4"-16 UNF	33.5	46.0	27.0	24.0	400	10MFFOR-8MBA90
1"-14	7/8"-14 UNF	33.3	50.0	27.0	27.0	400	10MFFOR-10MBA90
1"-14	1.1/16"-12 UN	35.8	55.1	30.0	36.0	400	10MFFOR-12MBA90
1.3/16"-12	3/4"-16 UNF	37.5	46.5	30.0	24.0	400	12MFFOR-8MBA90
1.3/16"-12	7/8"-14 UNF	37.5	50.9	30.0	27.0	400	12MFFOR-10MBA90
1.3/16"-12	1.1/16"-12 UN	37.5	55.0	30.0	36.0	400	12MFFOR-12MBA90
1.3/16"-12	1.5/16"-12 UN	41.0	59.7	36.0	41.0	400	12MFFOR-16MBA90
1.7/16"-12	1.1/16"-12 UN	41.7	58.9	36.0	36.0	400	16MFFOR-12MBA90
1.7/16"-12	1.5/16"-12 UN	41.7	59.7	36.0	41.0	400	16MFFOR-16MBA90
1.7/16"-12	1.5/8"-12 UN	44.7	62.2	41.0	50.0	250	16MFFOR-20MBA90
1.11/16"-12	1.5/16"-12 UN	44.7	62.2	41.0	41.0	250	20MFFOR-16MBA90
1.11/16"-12	1.5/8"-12 UN	44.5	62.0	41.0	50.0	250	20MFFOR-20MBA90
1.11/16"-12	1.7/8"-12 UN	48.8	65.8	50.0	55.0	200	20MFFOR-24MBA90
2"-12	1.5/8"-12 UN	49.0	66.0	50.0	50.0	250	24MFFOR-20MBA90
2"-12	1.7/8"-12 UN	49.0	66.0	50.0	55.0	250	24MFFOR-24MBA90

ORFS MFFOR-MBA90 LONG

SAE flat face O-Ring male / male SAE 'O' Ring boss 90° elbow long version

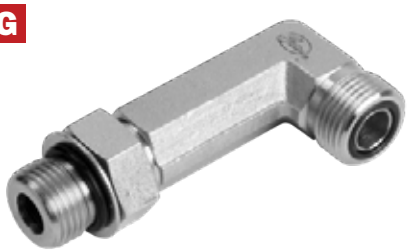

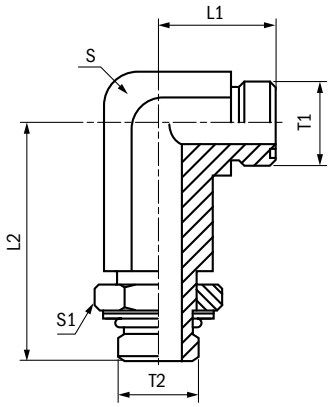

THREAD		LENGTH		HEX/FLATS		WORKING PRESSURE	ADAPTOR
T1	T2	L1	L2	S	S1	WP	REF.
ORFS	SAE O	mm	mm	mm	mm	bar	ORFS
9/16"-18	7/16"-20 UNF	21.6	56.6	14.0	17.0	630	4MFFOR-4MBA90 LONG
9/16"-18	9/16"-18 UNF	23.4	66.3	19.0	19.0	630	4MFFOR-6MBA90 LONG
11/16"-16	9/16"-18 UNF	25.0	66.3	19.0	19.0	630	6MFFOR-6MBA90 LONG
11/16"-16	3/4"-16 UNF	26.4	74.9	19.0	24.0	630	6MFFOR-8MBA90 LONG
13/16"-16	3/4"-16 UNF	28.0	74.9	19.0	24.0	630	8MFFOR-8MBA90 LONG
13/16"-16	7/8"-14 UNF	30.7	89.2	27.0	27.0	400	8MFFOR-10MBA90 LONG
1"-14	7/8"-14 UNF	33.3	89.2	27.0	27.0	400	10MFFOR-10MBA90 LONG
1"-14	1.1/16"-12 UN	35.8	100.8	30.0	36.0	400	10MFFOR-12MBA90 LONG
1.3/16"-12	1.1/16"-12 UN	37.3	100.8	30.0	36.0	400	12MFFOR-12MBA90 LONG
1.3/16"-12	1.5/16"-12 UN	41.2	114.6	36.0	41.0	400	12MFFOR-16MBA90 LONG
1.7/16"-12	1.5/16"-12 UN	41.7	114.6	36.0	41.0	400	16MFFOR-16MBA90 LONG
1.7/16"-12	1.5/8"-12 UN	44.7	126.5	41.0	50.0	250	16MFFOR-20MBA90 LONG
1.11/16"-12	1.5/8"-12 UN	44.7	126.5	41.0	50.0	250	20MFFOR-20MBA90 LONG
2"-12	1.7/8"-12 UN	48.8	139.2	48.0	55.0	250	24MFFOR-24MBA90 LONG

ORFS MFFOR-FFORX

SAE flat face O-Ring female swivel / male



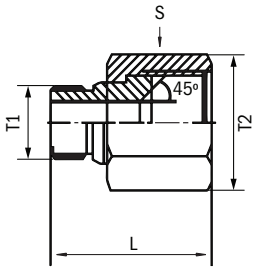

THREAD		LENGTH	HEX/FLATS	WORKING PRESSURE	ADAPTOR
T1	T2	L	S	WP	REF.
ORFS	ORFS F	mm	mm	bar	ORFS
9/16"-18	9/16"-18	18.6	17.0	630	4MFFOR-4FFORX
9/16"-18	11/16"-16	19.6	22.0	630	4MFFOR-6FFORX
9/16"-18	13/16"-16	21.8	24.0	630	4MFFOR-8FFORX
9/16"-18	1"-14	22.9	30.0	400	4MFFOR-10FFORX
9/16"-18	1.3/16"-12	24.9	36.0	400	4MFFOR-12FFORX
11/16"-16	9/16"-18	17.8	17.0	630	6MFFOR-4FFORX
11/16"-16	11/16"-16	20.5	22.0	630	6MFFOR-6FFORX
11/16"-16	13/16"-16	22.4	24.0	630	6MFFOR-8FFORX
13/16"-16	1"-14	24.2	30.0	400	6MFFOR-10FFORX
11/16"-16	1.3/16"-12	26.2	36.0	400	6MFFOR-12FFORX
11/16"-16	1.7/16"-12	27.6	41.0	400	6MFFOR-16FFORX
13/16"-16	1"-14	25.7	30.0	400	8MFFOR-10FFORX
13/16"-16	1.3/16"-12	27.7	36.0	400	8MFFOR-12FFORX
13/16"-16	1.7/16"-12	29.2	41.0	400	8MFFOR-16FFORX
1"-14	1.3/16"-12	30.4	36.0	400	10MFFOR-12FFORX
1"-14	1.7/16"-12	31.9	41.0	400	10MFFOR-16FFORX
1.3/16"-12	1.7/16"-12	33.0	41.0	400	12MFFOR-16FFORX
1.3/16"-12	1.11/16"-12	33.5	50.0	250	12MFFOR-20FFORX
1.7/16"-12	1.11/16"-12	38.5	50.0	250	16MFFOR-20FFORX
1.7/16"-12	2"-12	34.0	60.0	250	16MFFOR-24FFORX
1.11/16"-12	2"-12	34.0	60.0	250	20MFFOR-24FFORX

ORFS MFFOR-FFORX90

SAE flat face O-Ring male / female swivel 90° elbow



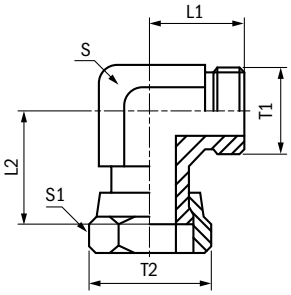

THREAD		LENGTH		HEX/FLATS		WORKING PRESSURE	ADAPTOR
T1	T2	L1	L2	S	S1	WP	REF.
ORFS	ORFS F	mm	mm	mm	mm	bar	ORFS
9/16"-18	9/16"-18	21.6	26.4	14.0	17.0	630	4MFFOR-4FFORX90
11/16"-16	11/16"-16	24.9	29.2	19.0	22.0	630	6MFFOR-6FFORX90
13/16"-16	13/16"-16	28.0	38.0	19.0	24.0	630	8MFFOR-8FFORX90
1"-14	1"-14	33.3	41.2	27.0	30.0	400	10MFFOR-10FFORX90
1.3/16"-12	1.3/16"-12	37.5	46.5	30.0	36.0	400	12MFFOR-12FFORX90
1.7/16"-12	1.7/16"-12	41.7	53.3	36.0	41.0	400	16MFFOR-16FFORX90
1.11/16"-12	1.11/16"-12	44.7	58.2	41.0	50.0	250	20MFFOR-20FFORX90
2"-12	2"-12	48.8	61.2	48.0	60.0	250	24MFFOR-24FFORX90

ORFS MFFOR-FJX

SAE flat face O-Ring male / female swivel JIC 37°



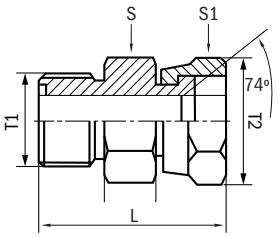

THREAD		LENGTH	HEX/FLATS		WORKING PRESSURE	ADAPTOR
T1	T2	L	S	S1	WP	REF.
ORFS	JIC F	mm	mm	mm	bar	ORFS
9/16"-18	7/16"-20	25.7	17.0	14.0	350	4MFFOR-4FJX
11/16"-16	9/16"-18	30.2	19.0	19.0	350	6MFFOR-6FJX
13/16"-16	3/4"-16	34.2	22.0	22.0	310	8MFFOR-8FJX
1"-14	7/8"-14	38.0	27.0	27.0	240	10MFFOR-10FJX
1.3/16"-12	1.1/16"-12	43.4	32.0	32.0	240	12MFFOR-12FJX
1.7/16"-12	1.5/16"-12	47.4	41.0	41.0	210	16MFFOR-16FJX
1.11/16"-12	1.5/8"-12	50.0	46.0	50.0	170	20MFFOR-20FJX
2"-12	1.7/8"-12	52.0	55.0	60.0	140	24MFFOR-24FJX

ORFS FFORX-MJ

SAE flat face O-Ring female swivel / male JIC 37°



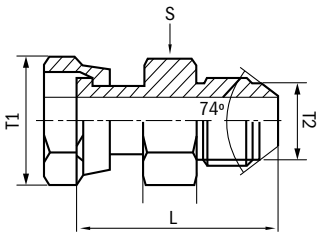

THREAD		LENGTH	HEX/FLATS		WORKING PRESSURE	ADAPTOR
T1	T2	L	S	S1	WP	REF.
ORFS F	JIC	mm	mm	mm	bar	ORFS
9/16"-18	7/16"-20	40.1	17.0	17.0	350	4FFORX-4MJ
11/16"-16	9/16"-18	42.0	19.0	22.0	350	6FFORX-6MJ
13/16"-16	3/4"-16	48.3	22.0	24.0	310	8FFORX-8MJ
1"-14	7/8"-14	57.1	27.0	30.0	240	10FFORX-10MJ
1.3/16"-12	1.1/16"-12	63.5	32.0	36.0	240	12FFORX-12MJ
1.7/16"-12	1.5/16"-12	67.3	41.0	41.0	210	16FFORX-16MJ
1.11/16"-12	1.5/8"-12	73.4	50.0	50.0	170	20FFORX-20MJ
2"-12	1.7/8"-12	71.0	50.0	60.0	140	24FFORX-24MJ

ORFS FFORX-MBSPPWD

SAE flat face O-Ring female swivel / male BSPP with captive seal



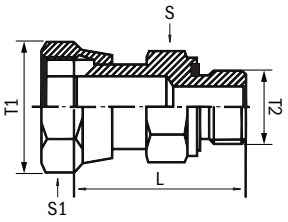

THREAD		LENGTH	HEX/FLATS		WORKING PRESSURE	ADAPTOR
T1	T2	L	S	S1	WP	REF.
ORFS F	BSPP	mm	mm	mm	bar	ORFS
9/16"-18	1/8"-28	34.0	14.0	17.0	630	4FFORX-2MBSPPWD
9/16"-18	1/4"-19	38.0	19.0	17.0	630	4FFORX-4MBSPPWD
9/16"-18	3/8"-19	37.8	22.0	17.0	630	4FFORX-6MBSPPWD
11/16"-16	1/4"-19	40.0	19.0	22.0	630	6FFORX-4MBSPPWD
11/16"-16	3/8"-19	40.0	22.0	22.0	630	6FFORX-6MBSPPWD
11/16"-16	1/2"-14	46.0	27.0	22.0	400	6FFORX-8MBSPPWD
13/16"-16	1/4"-19	47.0	22.0	24.0	630	8FFORX-4MBSPPWD
13/16"-16	3/8"-19	47.0	22.0	24.0	630	8FFORX-6MBSPPWD
13/16"-16	1/2"-14	49.0	27.0	24.0	400	8FFORX-8MBSPPWD
13/16"-16	3/4"-14	51.0	32.0	24.0	400	8FFORX-12MBSPPWD
1"-14	5/8"-14	52.0	30.0	30.0	400	10FFORX-10MBSPPWD
1"-14	3/4"-14	54.0	32.0	30.0	400	10FFORX-12MBSPPWD
1.3/16"-12	1/2"-14	55.0	30.0	36.0	400	12FFORX-8MBSPPWD
1.3/16"-12	3/4"-14	57.0	32.0	36.0	400	12FFORX-12MBSPPWD
1.7/16"-12	3/4"-14	66.0	36.0	41.0	400	16FFORX-12MBSPPWD
1.7/16"-12	1"-11	67.0	41.0	41.0	400	16FFORX-16MBSPPWD
1.11/16"-12	1"-11	67.0	41.0	50.0	250	20FFORX-16MBSPPWD
1.11/16"-12	1.1/4"-11	69.0	50.0	50.0	250	20FFORX-20MBSPPWD
2"-12	1.1/2"-11	72.0	55.0	60.0	250	24FFORX-24MBSPPWD

ORFS FFORX-MBA90

SAE flat face O-Ring female swivel / male SAE 'O' Ring boss 90° elbow



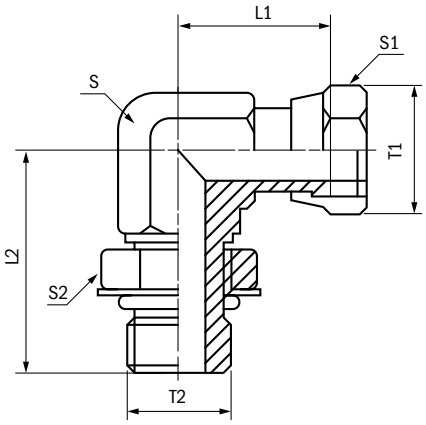

THREAD		LENGTH		HEX/FLATS			WORKING PRESSURE	ADAPTOR
T1	T2	L1	L2	S	S1	S2	WP	REF.
ORFS F	SAE O	mm	mm	mm	mm	mm	bar	ORFS
9/16"-18	7/16"-20 UNF	26.4	32.8	14.0	17.0	17.0	315	4FFORX-4MBA90
11/16"-16	9/16"-18 UNF	31.0	36.8	19.0	22.0	19.0	315	6FFORX-6MBA90
13/16"-16	3/4"-16 UNF	38.0	40.5	19.0	24.0	24.0	315	8FFORX-8MBA90
1"-14	7/8"-14 UNF	41.2	50.0	27.0	30.0	27.0	250	10FFORX-10MBA90
1.3/16"-12	1.1/16"-12 UN	46.5	55.0	30.0	36.0	36.0	250	12FFORX-12MBA90
1.7/16"-12	1.5/16"-12 UN	53.5	59.5	36.0	41.0	41.0	200	16FFORX-16MBA90
1.11/16"-12	1.5/8"-12 UN	58.2	62.2	41.0	50.0	50.0	160	20FFORX-20MBA90
2"-12	1.7/8"-12 UN	58.8	66.0	48.0	60.0	55.0	160	24FFORX-24MBA90

ORFS FFORX-FFORX

SAE flat face O-Ring female swivel / female swivel



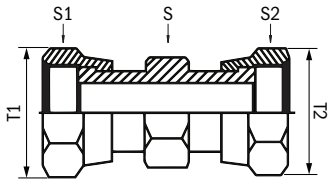

THREAD		LENGTH	HEX/FLATS		WORKING PRESSURE	ADAPTOR
T1	T2	L	S	S1 & S2	WP	REF.
ORFS F	ORFS F	mm	mm	mm	bar	ORFS
9/16"-18	9/16"-18	40.0	17.0	17.0	630	4FFORX-4FFORX
11/16"-16	11/16"-16	46.0	19.0	22.0	630	6FFORX-6FFORX
13/16"-16	13/16"-16	53.8	22.0	24.0	630	8FFORX-8FFORX
1"-14	1"-14	61.0	27.0	30.0	400	10FFORX-10FFORX
1.3/16"-12	1.3/16"-12	68.0	32.0	36.0	400	12FFORX-12FFORX
1.7/16"-12	1.7/16"-12	70.0	36.0	41.0	400	16FFORX-16FFORX
1.11/16"-12	1.11/16"-12	76.0	46.0	50.0	250	20FFORX-20FFORX
2"-12	2"-12	80.0	55.0	60.0	250	24FFORX-24FFORX

ORFS MFFOR-PLUG

SAE flat face O-Ring male plug



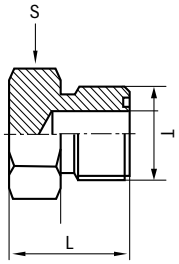

THREAD	LENGTH	HEX/FLATS	WORKING PRESSURE	ADAPTOR
T	L	S	WP	REF.
ORFS	mm	mm	bar	ORFS
9/16"-18	16.7	17.0	630	4MFFOR-PLUG
11/16"-16	19.1	19.0	630	6MFFOR-PLUG
13/16"-16	21.7	22.0	630	8MFFOR-PLUG
1"-14	25.9	27.0	400	10MFFOR-PLUG
1.3/16"-12	27.4	32.0	400	12MFFOR-PLUG
1.7/16"-12	27.9	41.0	400	16MFFOR-PLUG
1.11/16"-12	27.9	46.0	250	20MFFOR-PLUG
2"-12	27.9	55.0	250	24MFFOR-PLUG

ORFS FFORX-CAP

SAE flat face O-Ring female swivel cap



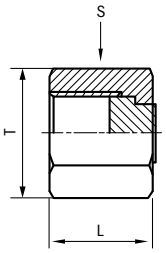

THREAD	LENGTH	HEX/FLATS	WORKING PRESSURE	ADAPTOR
T	L	S	WP	REF.
ORFS F	mm	mm	bar	ORFS
9/16"-18	14.8	17.0	630	4FFORX-CAP
11/16"-16	17.0	22.0	630	6FFORX-CAP
13/16"-16	31.0	24.0	630	8FFORX-CAP
1"-14	23.5	30.0	400	10FFORX-CAP
1.3/16"-12	26.0	36.0	400	12FFORX-CAP
1.7/16"-12	27.8	41.0	400	16FFORX-CAP
1.11/16"-12	27.8	50.0	250	20FFORX-CAP
2"-12	27.8	60.0	250	24FFORX-CAP

ORFS FFOR-NUT

SAE flat face O-Ring nut



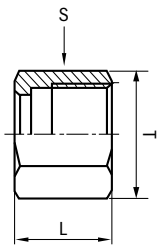

THREAD	LENGTH	HEX/FLATS	WORKING PRESSURE	ADAPTOR
T	L	S	WP	REF.
ORFS F	mm	mm	bar	ORFS
9/16"-18	14.7	17.0	630	4FFOR-NUT
11/16"-16	17.0	22.0	630	6FFOR-NUT
13/16"-16	21.0	24.0	630	8FFOR-NUT
1"-14	23.5	30.0	400	10FFOR-NUT
1.3/16"-12	26.5	36.0	400	12FFOR-NUT
1.7/16"-12	27.8	41.0	400	16FFOR-NUT
1.11/16"-12	27.8	50.0	250	20FFOR-NUT
2"-12	27.8	60.0	250	24FFOR-NUT





DRIVEN BY POSSIBILITY™

PRESSURE WASH ADAPTORS

MBSPP-MM BRASS

BSPP 60° male / male metric



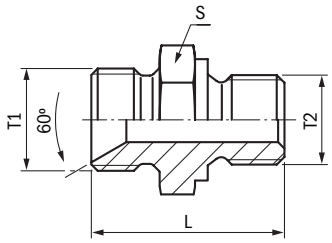

THREAD		LENGTH	HEX/FLATS	ADAPTOR
T1	T2	L	S	REF.
BSPP	METRIC	mm	mm	BSP
¼"-19	M22x1.5	29.0	22.0	4MBSPP-22MM BRASS
⅜"-19	M22x1.5	29.0	22.0	6MBSPP-22MM BRASS
½"-14	M22x1.5	29.0	22.0	8MBSPP-22MM BRASS

MM-MM BRASS

Metric male / male



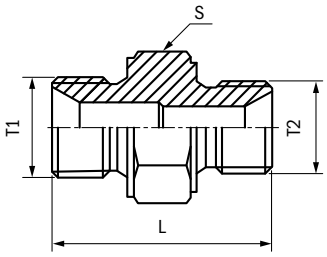

THREAD		LENGTH	HEX/FLATS	ADAPTOR
T1	T2	L	S	REF.
METRIC	METRIC	mm	mm	BSP
M22x1.5	M22x1.5	54.0	27.0	22MM-22MM BRASS

FBSPP-MM BRASS

BSPP 60° female / male metric



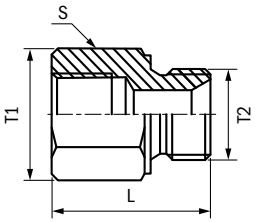

THREAD		LENGTH	HEX/FLATS	ADAPTOR
T1	T2	L	S	REF.
BSPP F	METRIC	mm	mm	BSP
⅛"-28	M22x1.5	29.0	22.0	2FBSPP-22MM BRASS
¼"-19	M22x1.5	29.0	22.0	4FBSPP-22MM BRASS
⅜"-19	M22x1.5	29.0	22.0	6FBSPP-22MM BRASS





DRIVEN BY POSSIBILITY™

QUICK-LOK ADAPTORS

BSP MBSPP-FQLH

Quick-Lok high adaptor BSP MBSPP to QLH.
Male BSPP thread with captive seal. 60° cone.
DIN 3852-11 form e. ISO 1179-2.



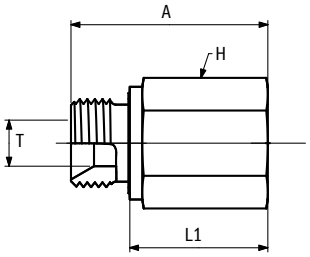

		L				ADAPTOR
T1	T2	A	L1	H	T	REF.
FQLH	BSPP	mm	mm	mm	mm	QLH
4FQLH	G¼" - 19 BSPP	44.5	32.5	22.0	4.7	4FQLH-4MBSPPCSC
6FQLH	G⅜" - 19 BSPP	44.7	32.7	22.0	8.2	6FQLH-6MBSPPCSC
8FQLH	G½" - 14 BSPP	47.0	33.0	27.0	11.0	8FQLH-8MBSPPCSC
12FQLH	G¾" - 14 BSPP	49.2	33.2	36.0	16.7	12FQLH-12MBSPPCSC
16FQLH	G1" - 11 BSPP	51.0	33.0	41.0	22.2	16FQLH-16MBSPPCSC

BSP MBSPPBKHD-FQLH

Quick-Lok high adaptor BSP MBSPPBKHD to QLH.
Male BSPP thread.
Bulkhead. 60° cone.



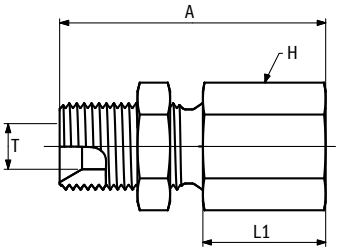

		L				ADAPTOR
T1	T2	A	L1	H	T	REF.
FQLH	BSPP	mm	mm	mm	mm	QLH
4FQLH	G¼" - 19 BSPP	62.0	30.0	19.0	4.7	4FQLH-4MBSPPBKHD
6FQLH	G⅜" - 19 BSPP	62.0	30.0	22.0	8.2	6FQLH-6MBSPPBKHD
8FQLH	G½" - 14 BSPP	65.0	30.0	27.0	11.0	8FQLH-8MBSPPBKHD
12FQLH	G¾" - 14 BSPP	68.0	30.0	36.0	16.7	12FQLH-12MBSPPBKHD
16FQLH	G1" - 11 BSPP	71.0	30.0	41.0	22.2	16FQLH-16MBSPPBKHD

DIN MMOR-FQLH

Quick-Lok high adaptor DIN MMOR to QLH.
Male metric thread with O-Ring. ISO 6149-2, -3.



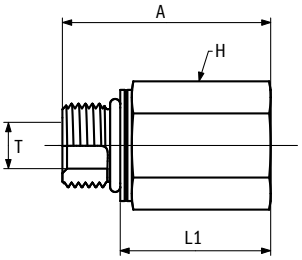

		L				ADAPTOR
T1	T2	A	L1	H	T	REF.
FQLH	METRIC	mm	mm	mm	mm	QLH
4FQLH	M12x1.5	43.5	32.5	19.0	6.0	4FQLH-12MMOR
4FQLH	M14x1.5	43.5	32.5	22.0	7.0	4FQLH-14MMOR
6FQLH	M14x1.5	43.5	32.5	22.0	7.0	6FQLH-14MMOR
6FQLH	M16x1.5	45.0	32.5	22.0	9.0	6FQLH-16MMOR
6FQLH	M18x1.5	45.0	32.5	24.0	10.0	6FQLH-18MMOR
8FQLH	M18x1.5	45.0	32.5	24.0	10.0	8FQLH-18MMOR
8FQLH	M22x1.5	45.5	32.5	27.0	10.0	8FQLH-22MMOR
10FQLH	M22x1.5	45.5	32.5	27.0	14.0	10FQLH-22MMOR
12FQLH	M26x1.5	48.5	32.5	32.0	14.0	12FQLH-26MMOR
12FQLH	M27x2	48.5	32.5	32.0	18.0	12FQLH-27MMOR
16FQLH	M33x2	48.5	32.5	41.0	23.0	16FQLH-33MMOR

SAE MB-FQLH

Quick-Lok high adaptor SAE MB 'heavy duty" to QLH.
SAE j1926-2. ISO 11926-2.



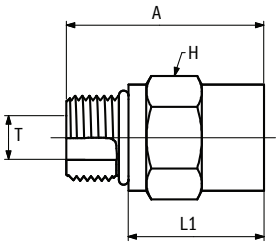

		L				ADAPTOR
T1	T2	A	L1	H	T	REF.
FQLH	SAE O	mm	mm	mm	mm	QLH
4FQLH	7/16" - 20 UNF	42.0	31.0	19.0	4.0	4FQLH-4MB
4FQLH	9/16" - 18 UNF	42.0	30.0	19.0	6.8	4FQLH-6MBS
6FQLH	7/16" - 20 UNF	42.0	31.0	22.0	4.5	6FQLH-4MB
6FQLH	9/16" - 18 UNF	43.0	31.0	22.0	7.5	6FQLH-6MBS
6FQLH	3/4" - 16 UNF	43.0	29.0	24.0	10.0	6FQLH-8MB
8FQLH	9/16" - 18 UNF	43.5	31.5	24.0	7.5	8FQLH-6MB
8FQLH	3/4" - 16 UNF	44.5	30.5	24.0	10.0	8FQLH-8MBS
8FQLH	7/8" - 14 UNF	46.0	30.0	27.0	12.7	8FQLH-10MB
10FQLH	3/4" - 16 UNF	47.0	33.0	27.0	10.0	10FQLH-8MB
10FQLH	7/8" - 14 UNF	47.0	31.0	27.0	12.7	10FQLH-10MB
10FQLH	1.1/16" - 12 UN	48.0	29.5	32.0	14.3	10FQLH-12MB
12FQLH	7/8" - 14 UNF	48.0	32.0	32.0	12.7	12FQLH-10MB
12FQLH	1.1/16" - 12 UN	50.0	31.5	32.0	15.5	12FQLH-12MB
12FQLH	1.5/16" - 12 UN	50.0	31.5	41.0	19.8	12FQLH-16MB
16FQLH	1.5/16" - 12 UN	50.0	31.5	41.0	21.0	16FQLH-16MB

SAE MB-FQLL

Quick-Lok low adaptor SAE MB 'heavy duty" to QLL.
SAE j1926-2. ISO 11926-2.



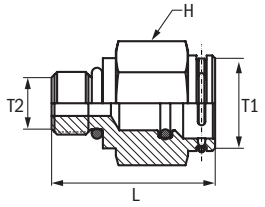

		L		ADAPTOR
T1	T2	L	H	REF.
FQLL	SAE O	mm	mm	QLH
6FQLL	7/16"-20 UNF	29.0	19.0	6FQLL-4MB
6FQLL	7/8"-14 UNF	41.2	27.0	6FQLL-10MB

NOTES

NOTES



DRIVEN BY POSSIBILITY™

CUSTOMER EXPERIENCE TEAM

TEAMGATESCSIR@GATES.COM

+48718814503 FOR ENGLISH
+48718814504 FOR FRENCH
+48718814505 FOR GERMAN
+48718814506 FOR ITALIAN
+48718814507 FOR SPANISH
+48718814502 FOR POLISH

THE MANUFACTURERS RESERVE THE RIGHT TO AMEND DETAILS WHERE NECESSARY.
E2/50155 - ©GATES 2024

GATES.COM